TELWIN®
JOIN THE INNOVATION

2022

Index

· ELENCO PEZZI DI RICAMBIO · SPARE PARTS LIST
· PIECES DETACHEES · PIEZAS DE REPUESTO
· ERSATZTEILLISTE

· ELEMENTS Line
· SALDATRICI MMA
· SALDATRICI A FILO MIG-MAG/FLUX
· IMPIANTI SALDATURA T.I.G.
· SISTEMI PER IL TAGLIO PLASMA
· PUNTATRICI
· CARICABATTERIE
· AVVIATORI
· CASCHI PER SALDATURA

· ELEMENTS Line
· POSTES DE SOUDAGE MMA
· SOUDEUSES Á FIL MIG-MAG/FLUX
· APPAREILS DE SOUDAGE T.I.G.
· APPAREILS POUR LE DECOUPAGE PLASMA
· SOUDEUSES PAR POINTS
· CHARGEURS DE BATTERIE
· CHARGEURS DEMARREURS
· MASQUES DE SOUDAGE

· ELEMENTS Line
· MMA SCHWEISSGERÄTE
· MIG-MAG/FLUX SCHWEISSGERÄTE
· W.I.G. ANLAGEN
· PLASMA SCHNEIDANLAGEN
· PUNKTSCHWEISSGERÄTE
· BATTERIE LADEGERÄTE
· LADEGERÄTE - MOTORSTARTER
· SCHWEISSHELME

· ELEMENTS Line
· MMA WELDING MACHINES
· MIG-MAG/FLUX WELDING MACHINES
· T.I.G. WELDING EQUIPMENTS
· PLASMA CUTTING SYSTEMS
· SPOT WELDING MACHINES
· BATTERY CHARGERS
· BATTERY CHARGERS - STARTERS
· WELDING HELMETS

· ELEMENTS Line
· SOLDADORAS MMA
· SOLDADORAS A HILO MIG-MAG/FLUX
· APARATOS DE SOLDADURA T.I.G.
· SISTEMAS DE CORTE POR PLASMA
· SOLDADORAS POR PUNTOS
· CARGADORES DE BATERIA
· ARRANCADORES
· CASCOS PARA SOLDADURA

• Il presente catalogo annulla e sostituisce il precedente.
• This list cancels and replaces the previous one.
• Le present catalogue annulle et remplace le precedent.
• Este catalogo elimina y reemplaza al anterior.
• Dieser Ersatzteilkatalog annulliert und ersetzt den Bisherigen.

ISO 9001

CERTIFIED QUALITY SYSTEM
UNI EN ISO 9001

ISO 45001
WORKERS HEALTH SAFETY

CERTIFIED SYSTEM
UNI ISO 45001

ISO 14001
ENVIRONMENTAL MANAGEMENT SYSTEM

CERTIFIED SYSTEM
UNI EN ISO 14001

index

ELEMENTS LINE

- T-ARC 120 4
- T-ARC 150 6
- T-ARC 160 8
- T-ARC 210 10
- INFINITY 120 12
- INFINITY 150 14
- INFINITY 170 16
- INFINITY 172 18
- INFINITY 180 20
- INFINITY 220 22
- INFINITY 228 CE 24
- INFINITY TIG 225 DC-HF/LIFT VRD 26
- BIMAX 120 AUTOMATIC 30
- BIMAX 140 TURBO 34
- MAXIMA 160 SYNERGIC 38
- MAXIMA 190 SYNERGIC 42
- MAXIMA 200 SYNERGIC 46
- MAXIMA 230 SYNERGIC 50
- MAXIMA 270 54
- INFINITY PLASMA 40 58
- TOURING 11 62
- TOURING 15 62
- TOURING 18 62
- ALASKA 150 START 64
- ALASKA 200 START 64
- SPRINTER 3000 START 66
- SPRINTER 4000 START 66
- SPRINTER 6000 START 68

MMA Welding

- FORCE 125 ..... pag. 70
- FORCE 145 ..... pag. 72
- FORCE 165 ..... pag. 74
- FORCE 195 ..... pag. 76
- TECNICA 171/S ..... pag. 78
- TECNICA 211/S ..... pag. 78
- FORCE 168 MPGE ..... pag. 80
- TECNICA 188 MPGE ..... pag. 82
- TECHNOLOGY 186 XT MPGE ..... pag. 84
- TECHNOLOGY 236 XT ..... pag. 86
- TECHNOLOGY 238 XT CE/MPGE ..... pag. 88
- SUPERIOR 250 ..... pag. 90
- SUPERIOR 320 CE VRD ..... pag. 92
- SUPERIOR 400 CE VRD ..... pag. 94
- SUPERIOR 630 CE VRD ..... pag. 96
- MOTOINVERTER 204 CE (Honda) ..... pag. 98
- NORDIKA 1800 ..... pag. 100
- NORDICA 4.181 TURBO ..... pag. 102
- NORDIKA 3200 ..... pag. 104
- NORDIKA 3250 ..... pag. 106
- NORDICA 4.280 TURBO ..... pag. 108
- ARTIKA 270 ..... pag. 110
- EURARC 410 ..... pag. 112
- EURARC 322 ..... pag. 114
- EURARC 422 ..... pag. 116
- EURARC 522 ..... pag. 118
- LINEAR 350i ..... pag. 120
- LINEAR 450i ..... pag. 122
- LINEAR 500i XD ..... pag. 124
- LINEAR 280 ..... pag. 126
- LINEAR 340 ..... pag. 126
- LINEAR 430HD ..... pag. 128
- LINEAR 530HD ..... pag. 130
- LINEAR 630HD ..... pag. 132

MIG-MAG Welding

- BIMAX 162 TURBO ..... pag. 134
- TELMIG 180/2 TURBO ..... pag. 138
- TELMIG 200/2 TURBO ..... pag. 142
- TELMIG 281/2 TURBO ..... pag. 146
- TELMIG 250/2 TURBO ..... pag. 150
- MASTERMIG 270/2 ..... pag. 154
- MASTERMIG 300 ..... pag. 158
- MASTERMIG 400 ..... pag. 162
- MASTERMIG 500 ..... pag. 166
- MASTERMIG 275i ..... pag. 172
- MASTERMIG 305i ..... pag. 176
- MASTERMIG 405i ..... pag. 180
- SUPERMIG 350i ..... pag. 184
- SUPERMIG 450i ..... pag. 188
- TS500 WIRE FEEDER ..... pag. 192
- TECHNOMIG 180 DUAL SYNERGIC ..... pag. 194
- TECHNOMIG 210 DUAL SYNERGIC ..... pag. 198
- TECHNOMIG 215 DUAL SYNERGIC ..... pag. 202
- TECHNOMIG 225 DUAL SYNERGIC ..... pag. 206
- TECHNOMIG 260 DUAL SYNERGIC ..... pag. 210
- TECHNOMIG 240 WAVE ..... pag. 214
- TECHNOMIG 223 TREO SYNERGIC ..... pag. 218
- SPOOL GUN ..... pag. 222
- TECHNOMIG 243 WAVE ..... pag. 224
- ELECTROMIG 220 SYNERGIC ..... pag. 230
- ELECTROMIG 300 SYNERGIC ..... pag. 234
- ELECTROMIG 400 SYNERGIC ..... pag. 238
- ELECTROMIG 450 SYNERGIC ..... pag. 242
- TE 450 AIR WIREFEEDER ..... pag. 246
- TE 450 WIREFEEDER ..... pag. 248
- ELECTROMIG 550 SYNERGIC ..... pag. 250
- TE 550 AIR WIREFEEDER ..... pag. 254
- TE 550 WIREFEEDER ..... pag. 256
- G.R.A. 5500 ..... pag. 258
- ELECTROMIG 230 WAVE ..... pag. 260
- ELECTROMIG 330 WAVE ..... pag. 264
- ELECTROMIG 430 WAVE ..... pag. 270
- G.R.A. 3300 ..... pag. 276
- INVERPULSE 60.30 WAVE ..... pag. 278
- TI 60.30 WIREFEEDER ..... pag. 282
- INVERPULSE 60.40 WAVE ..... pag. 284
- TI 60.40 WIREFEEDER ..... pag. 288
- TURNING TABLE ..... pag. 290
- TX 70 WIREFEEDER ..... pag. 292

TIG Welding

- TECNICA TIG 190 DC-LIFT VRD ..... pag. 294
- ADVANCE 227 XT MV/PFC VRD ..... pag. 298
- TECHNOLOGY TIG 230 DC-HF/LIFT VRD ..... pag. 300
- TECHNOLOGY TIG 182 AC/DC-HF/LIFT ..... pag. 302
- TECHNOLOGY TIG 222 AC/DC HF/LIFT VRD ..... pag. 306
- SUPERIOR TIG 251 DC-HF/LIFT VRD ..... pag. 310
- SUPERIOR TIG 252 AC/DC HF/LIFT VRD ..... pag. 314
- SUPERIOR TIG 311 DC-HF/LIFT VRD ..... pag. 318
- G.R.A. 4500 ..... pag. 322
- SUPERIOR TIG 322 AC/DC-HF/LIFT ..... pag. 324
- SUPERIOR TIG 421 DC-HF/LIFT ..... pag. 328
- SUPERIOR TIG 422 AC/DC-HF/LIFT ..... pag. 332
- G.R.A. 4000 ..... pag. 336
- CLEANTECH 100 ..... pag. 338
- TIG WELDING CLEANING KIT CT 100 ..... pag. 340
- CLEANTECH 200 ..... pag. 342
- TIG WELDING CLEANING KIT CT 200 ..... pag. 344

PLASMA Cutting

- TECHNOLOGY PLASMA 41 XT ..... pag. 346
- TECHNOLOGY PLASMA 54 XT KOMPRESSOR ..... pag. 350
- TECHNOLOGY PLASMA 60 XT ..... pag. 354
- SUPERIOR PLASMA 70 ..... pag. 358
- SUPERIOR PLASMA 100 ..... pag. 362
- SUPERIOR PLASMA 160 ..... pag. 366

SPOT Welding

- SMART INDUCTOR 5000 TWISTER ..... pag. 370
- D-ARC 200 ..... pag. 372
- ALUSPOTTER 6100 ..... pag. 374
- PULLER 4000 ..... pag. 376
- DIGITAL PULLER 5500 DUO ..... pag. 378
- DIGITAL PULLER 5500 ..... pag. 380
- DIGITAL CAR SPOTTER 5500 ..... pag. 382
- DIGITAL SPOTTER 7000 ..... pag. 384
- DIGITAL SPOTTER 9000 ..... pag. 386
- SPOT WELDING PNEUMATIC CLAMP ..... pag. 388
- DIGITAL SPOTTER 9000 AQUA ..... pag. 390
- PNEUMATIC CLAMP AQUA ..... pag. 394
- MANUAL SPOT WELDING CLAMP ..... pag. 396
- MANUAL CLAMP “C” ..... pag. 398
- INVERSPOTTER 13500 SMART AQUA ..... pag. 400
- PNEUMATIC SPOT WELDING CLAMP “C” AQUA ..... pag. 404
- INVERSPOTTER14000 SMART AQUA ..... pag. 406
- PNEUMATIC SPOT WELDING CLAMP “C” SMART AQUA ..... pag. 410
- MODULAR 20 TI ..... pag. 412
- DIGITAL MODULAR 230 ..... pag. 414
- DIGITAL MODULAR 400 ..... pag. 414
- PTE 18 LCD ..... pag. 416
- PTE 28 LCD ..... pag. 418
- PCP 18 LCD ..... pag. 420
- PCP 28 LCD ..... pag. 422
- G.R.A. 90 ..... pag. 424

CHARGING & STARTING

- PULSE 30 EVO ..... pag. 426
- PULSE 50 EVO ..... pag. 426
- DOCTOR CHARGE 55 CONNECT ..... pag. 428
- DOCTOR CHARGE 50 ..... pag. 430
- DOCTOR CHARGE 130 ..... pag. 432
- DOCTOR START 330 ..... pag. 434
- DOCTOR START 530 ..... pag. 436
- DOCTOR START 630 ..... pag. 438
- AUTOTRONIC 25 BOOST ..... pag. 440
- NEVADA 10 ..... pag. 442
- NEVADA 15 ..... pag. 442
- ALPINE 15 ..... pag. 444
- ALPINE 18 BOOST ..... pag. 446
- ALPINE 20 BOOST ..... pag. 448
- ALPINE 30 BOOST ..... pag. 448
- ALPINE 50 BOOST ..... pag. 450
- COMPUTER 48/2 PROF ..... pag. 452
- LEADER 150 START ..... pag. 454
- LEADER 220 START ..... pag. 456
- LEADER 400 START ..... pag. 458
- DYNAMIC 320 START ..... pag. 460
- DYNAMIC 420 START ..... pag. 460
- DYNAMIC 520 START ..... pag. 462
- DYNAMIC 620 START ..... pag. 464
- ENERGY 650 START ..... pag. 466
- ENERGY 1000 START ..... pag. 468
- ENERGY 1500 START ..... pag. 470
- STARTZILLA 4012 XT ..... pag. 472
- STARTZILLA 9012 XT ..... pag. 474
- STARTZILLA 9024 XT ..... pag. 476
- PRO START 2824 ..... pag. 478
- START PLUS 4824 ..... pag. 480
- START PLUS 6824 ..... pag. 482

WELDING HELMETS

- AIR PRO GRANDVIEW PAPR HELMET 484
- AIRLITE PAPR HELMET 486

ELENCO PEZZI DI RICAMBIO
LISTE PIECES DETACHEES
SPARE PARTS LIST
ERSATZTEILLISTE
PIEZAS DE REPUESTO

T-ARC 120

ELEMENTS LINE

TELWIN

Esploso macchina, Dessin appareil, Machine drawing, Explosions Zeichnung des Geräts, Diseño seccionado maquina.



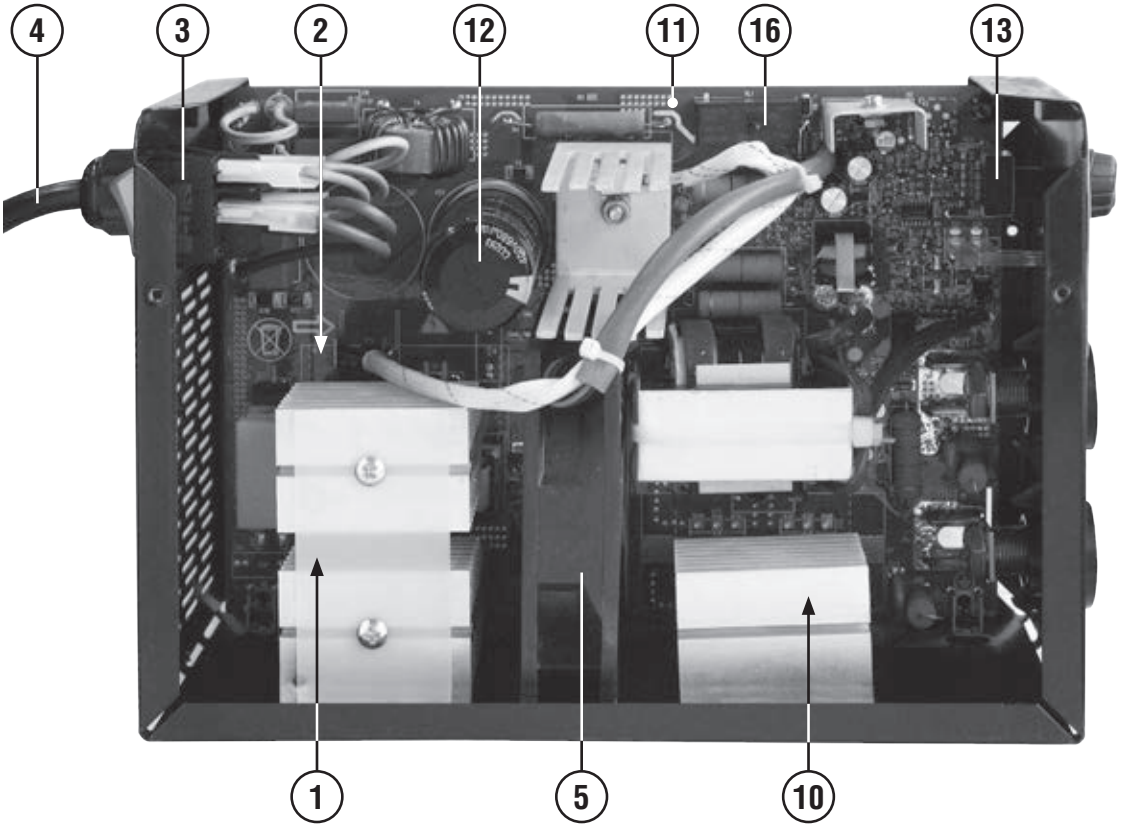

REF.	ELENCO PEZZI DI RICAMBIO PIECES DETACHEES SPARE PARTS LIST ERSATZTEILLISTE PIEZAS DE REPUESTO	CODICE CODE KODE
1	Kit igbt + diodi Kit igbt + diodes Kit igbt + diodes Kit igbt + dioden Kit igbt + diodos	982051
2	Termostato Thermostat Thermostat Thermostat Termostato	121762
3	Interruttore verde Interupteur vert Green switch Grüner schalter Interruptor verde	121978
4	Cavo alim. 3g1.5 2 M spina schuko Cable alim. 3g1.5 2 M fiche schuko Mains cable 3g1.5 2 M schuko plug Netzkabel 3g1.5 2 M schuko stecker Cable alim. 3g1.5 2 M espina schuko	132155
5	Ventilatore 24vdc 92x 92x25 Ventilateur 24vdc 92x 92x25 Fan 24vdc 92x 92x25 Ventilator 24vdc 92x 92x25 Ventilador 24vdc 92x 92x25	152901
6	Colorado 150b pinza di massa 150a Colorado 150b pince de masse 150a Colorado 150b work clamp 150a Colorado 150b masseklemme 150a Colorado 150b pinza de masa 150a	804178
7	Dallas 300 pinza portaelettrodi 300a Dallas 300 pince porte-electrodes 300a Dallas 300 electrode holder 300a Dallas 300 elektrodenzangen 300a Dallas 300 pinza portaelectrodos 300a	804170
8	Pinza di massa + cavo 16mmq 2m ax25 Pince de masse + cable 16mmq 2m ax25 Work clamp + cable 16mmq 2m ax25 Massezange + kabel 16mmq 2m ax25 Pinca de masa + cable 16mmq 2m ax25	804120
9	Pinza portaelettrodo+ cavo 16mmq 3m ax25 Pince portelectrode+ cable 16mmq 3m ax25 Electrode holder + cable 16mmq 3m ax25 Elektrondehalter + kabel 16mmq 3m ax25 Pinca portaelectrodo+cable 16mmq 3m ax25	804121
10	Kit diodi Kit diodes Diode kit Diode kit Kit diodo	981591
11	Kit scheda completa Kit platine complete Complete pcb kit Komplette karte kit Kit tarjeta completa	982316
12	Kit condensatore snap-in Kit condensateur snap-in Condenser kit snap-in Kondensator kit snap-in Kit condensator snap-in	982269
13	Kit potenziometro + manopole Kit potentiometre + poignees Kit potentiometer + knobs Kit potentiometer + knopfs Kit potenciometro + mandos	982271
14	Kit carpenterie Metal sheets kit Metal sheets kit Metal sheets kit Metal sheets kit	982317
15	Kit atlas 25mmq Kit atlas 25mmq Kit atlas 25mmq Kit atlas 25mmq Kit atlas 25mmq	982274
16	Kit componenti aux. Kit composants aux. Kit aux. Components Kit aux. Bauteile Kit componentes aux.	982281

Schema elettrico, Schéma électrique, Diagram, Schaltplan, Esquema de conexiones.

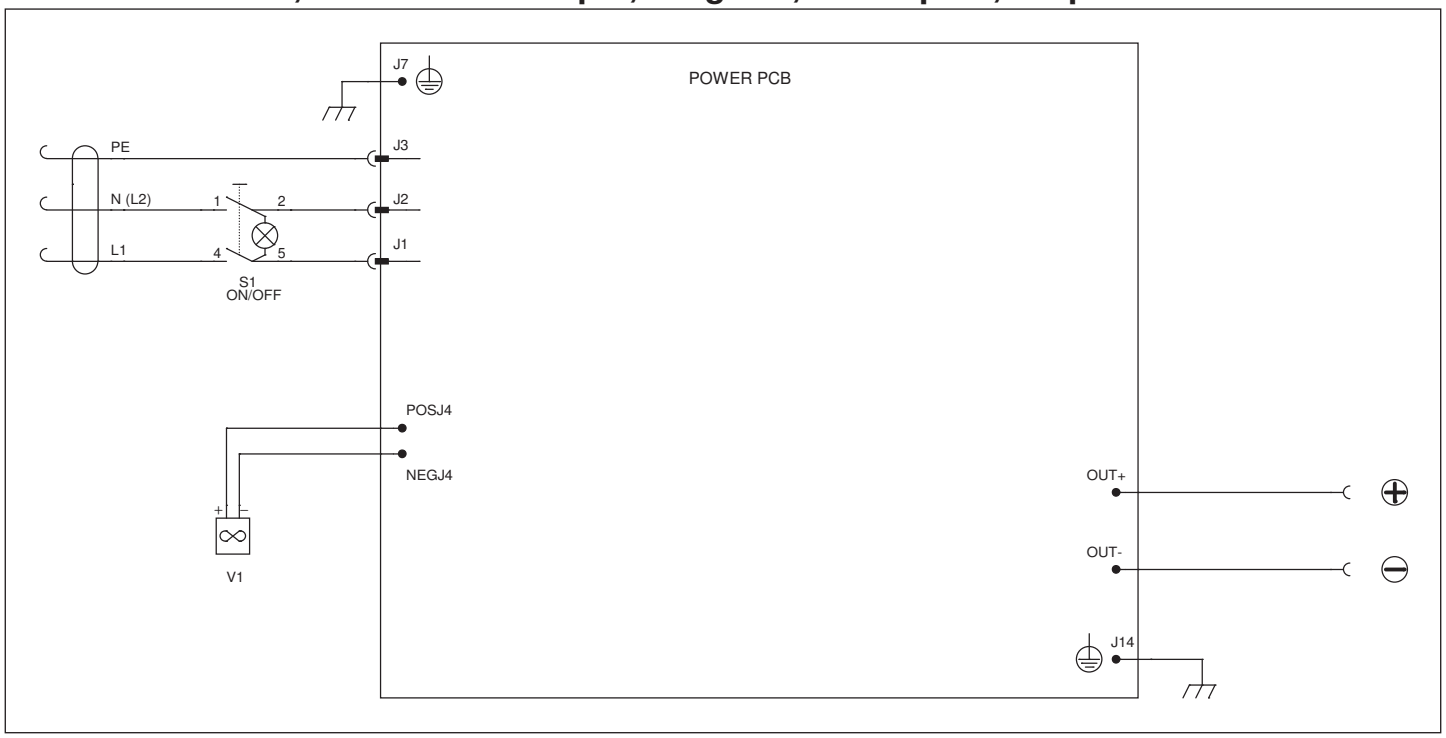

ELENCO PEZZI DI RICAMBIO
LISTE PIECES DETACHEES
SPARE PARTS LIST
ERSATZTEILLISTE
PIEZAS DE REPUESTO

T-ARC 150

ELEMENTS LINE

TELWIN

Esploso macchina, Dessin appareil, Machine drawing, Explosions Zeichnung des Geräts, Diseño seccionado maquina.



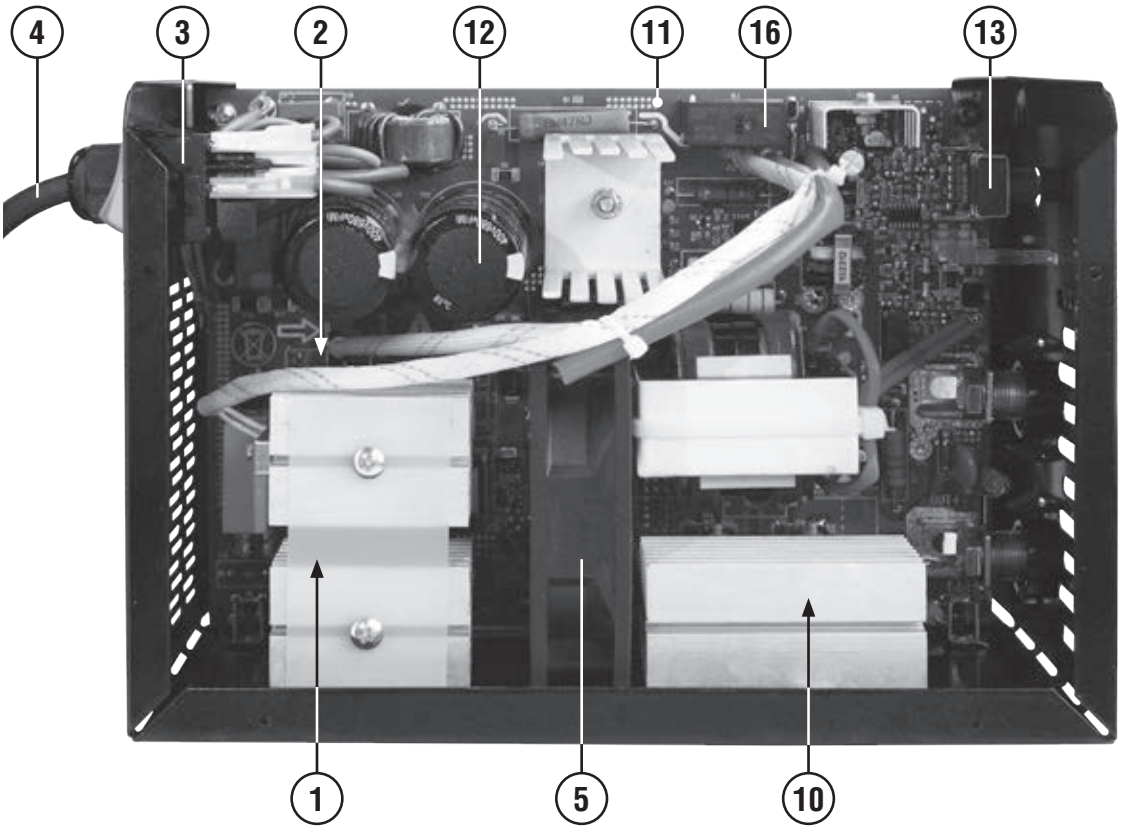

REF.	ELENCO PEZZI DI RICAMBIO PIECES DETACHEES SPARE PARTS LIST ERSATZTEILLISTE PIEZAS DE REPUESTO	CODICE CODE KODE
1	Kit igbt + diodi Kit igbt + diodes Kit igbt + diodes Kit igbt + dioden Kit igbt + diodos	982051
2	Termostato 10,0a 250v 085° 063° nc Thermostat 10,0a 250v 085° 063° nc Thermal switch 10,0a 250v 085° 063° nc Thermostat 10,0a 250v 085° 063° nc Termostato 10,0a 250v 085° 063° nc	121249
3	Interruttore verde Interupteur vert Green switch Grüner schalter Interruptor verde	121978
4	Cavo alim. 3g1.5 2 M spina schuko Cable alim. 3g1.5 2 M fiche schuko Mains cable 3g1.5 2 M schuko plug Netzkabel 3g1.5 2 M schuko stecker Cable alim. 3g1.5 2 M espina schuko	132155
5	Ventilatore 24vdc 92x 92x25 Ventilateur 24vdc 92x 92x25 Fan 24vdc 92x 92x25 Ventilator 24vdc 92x 92x25 Ventilador 24vdc 92x 92x25	152901
6	Colorado 150b pinza di massa 150a Colorado 150b pince de masse 150a Colorado 150b work clamp 150a Colorado 150b masseklemme 150a Colorado 150b pinza de masa 150a	804178
7	Dallas 300 pinza portaelettrodi 300a Dallas 300 pince porte-electrodes 300a Dallas 300 electrode holder 300a Dallas 300 elektrodenzangen 300a Dallas 300 pinza portaelectrodos 300a	804170
8	Pinza di massa + cavo 16mmq 2m ax25 Pince de masse + cable 16mmq 2m ax25 Work clamp + cable 16mmq 2m ax25 Massezange + kabel 16mmq 2m ax25 Pinca de masa + cable 16mmq 2m ax25	804120
9	Pinza portaelettrodo+ cavo 16mmq 3m ax25 Pince portelectrode+ cable 16mmq 3m ax25 Electrode holder + cable 16mmq 3m ax25 Elektrondehalter + kabel 16mmq 3m ax25 Pinca portaelectrodo+cable 16mmq 3m ax25	804121
10	Kit diodi Kit diodes Diode kit Diode kit Kit diodo	981591
11	Kit scheda completa Kit platine complete Complete control pcb kit Komplette steurungskarte kit Kit tarjeta de controlo completa	982054
12	Kit condensatore snap-in Kit condensateur snap-in Condenser kit snap-in Kondensator kit snap-in Kit condensator snap-in	982269
13	Kit potenziometro + manopole Kit potentiometre + poignees Kit potentiometer + knobs Kit potentiometer + knopfs Kit potenciometro + mandos	982271
14	Kit lamiere metallo Kit toles metalliques Metal sheet kit Metalblätter kit Kit hojas de metal	982283
15	Kit atlas 25mmq Kit atlas 25mmq Kit atlas 25mmq Kit atlas 25mmq Kit atlas 25mmq	982274
16	Kit componenti aux. Kit composants aux. Kit aux. Components Kit aux. Bauteile Kit componentes aux.	982281

Schema elettrico, Schéma électrique, Diagram, Schaltplan, Esquema de conexiones.

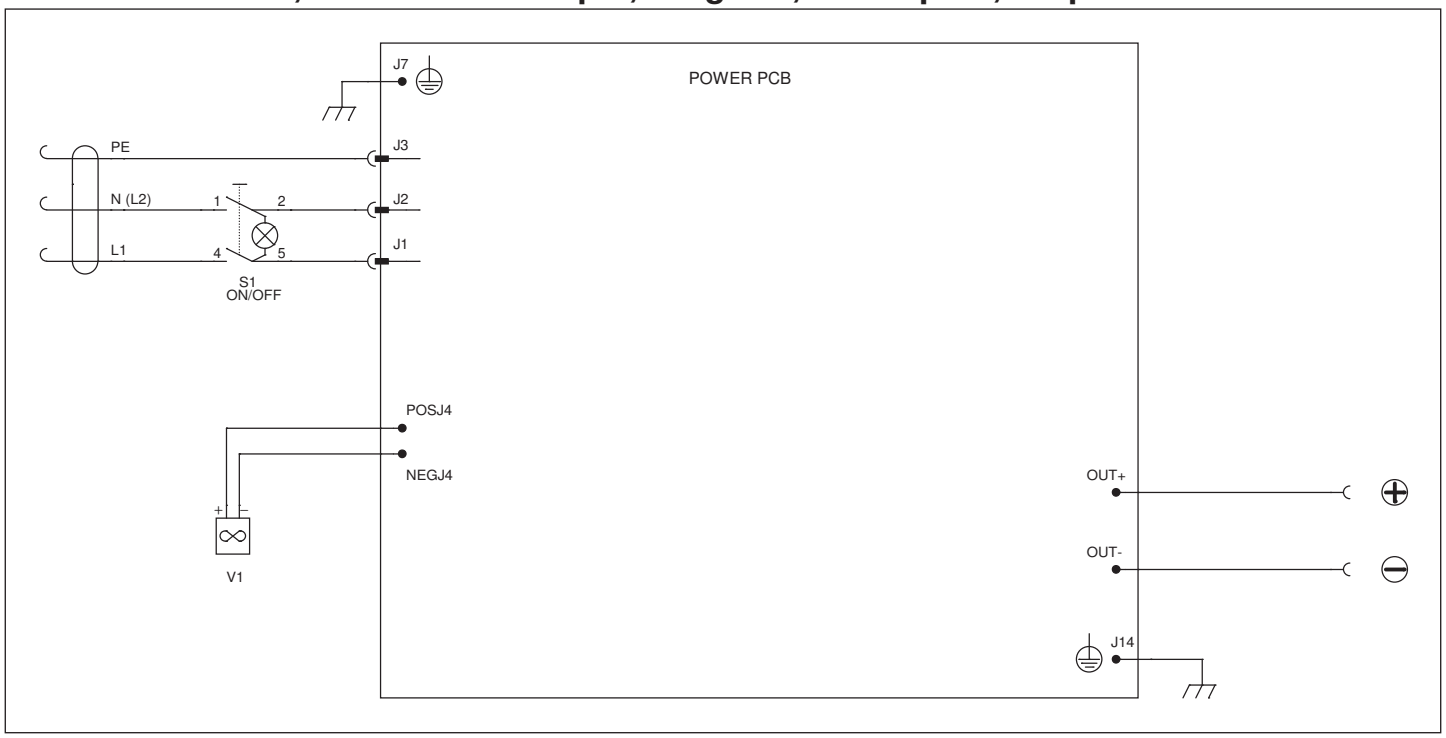

ELENCO PEZZI DI RICAMBIO
LISTE PIECES DETACHEES
SPARE PARTS LIST
ERSATZTEILLISTE
PIEZAS DE REPUESTO

T-ARC 160

ELEMENTS LINE

TELWIN

Esploso macchina, Dessin appareil, Machine drawing, Explosions Zeichnung des Geräts, Diseño seccionado maquina.



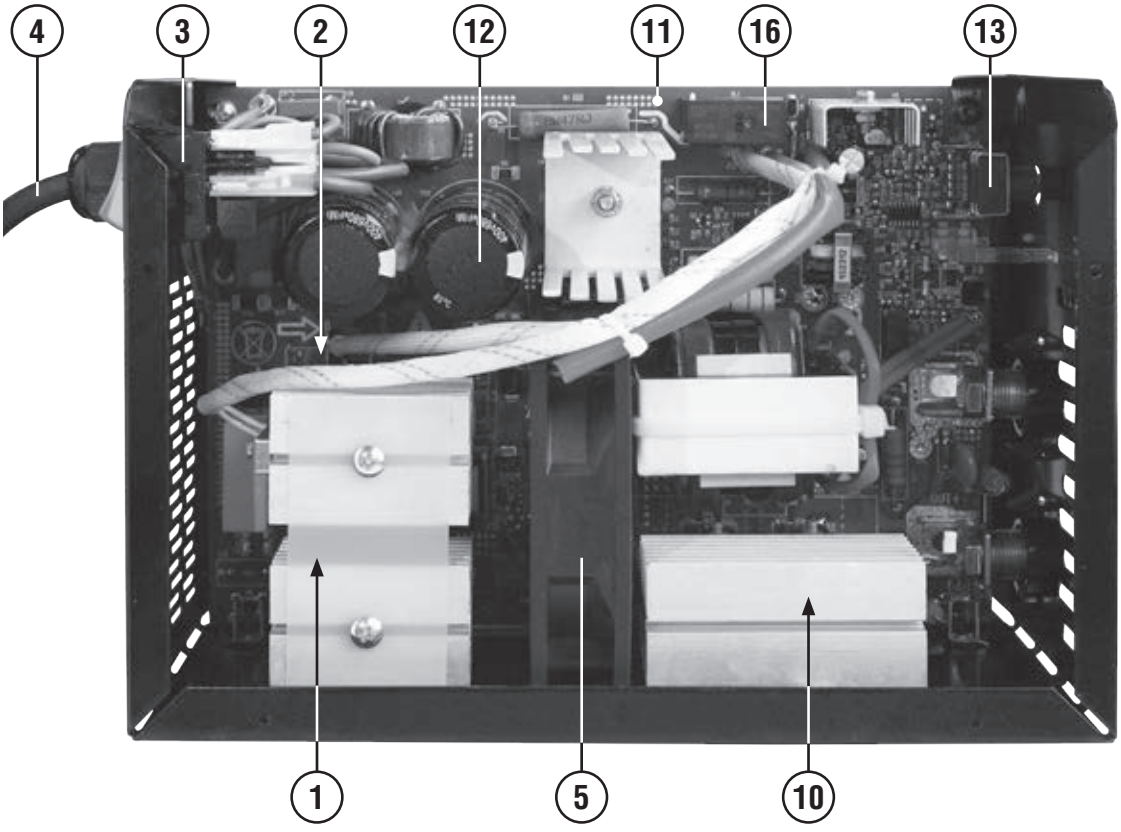

REF.	ELENCO PEZZI DI RICAMBIO PIECES DETACHEES SPARE PARTS LIST ERSATZTEILLISTE PIEZAS DE REPUESTO	CODICE CODE KODE
1	Kit igbt + diodi Kit igbt + diodes Kit igbt + diodes Kit igbt + dioden Kit igbt + diodos	982051
2	Termostato 10,0a 250v 085° 063° nc Thermostat 10,0a 250v 085° 063° nc Thermal switch 10,0a 250v 085° 063° nc Thermostat 10,0a 250v 085° 063° nc Termostato 10,0a 250v 085° 063° nc	121249
3	Interruttore verde Interupteur vert Green switch Grüner schalter Interruptor verde	121978
4	Cavo alim. 3g1.5 2 M spina schuko Cable alim. 3g1.5 2 M fiche schuko Mains cable 3g1.5 2 M schuko plug Netzkabel 3g1.5 2 M schuko stecker Cable alim. 3g1.5 2 M espina schuko	132155
5	Ventilatore 24vdc 92x 92x25 Ventilateur 24vdc 92x 92x25 Fan 24vdc 92x 92x25 Ventilator 24vdc 92x 92x25 Ventilador 24vdc 92x 92x25	152901
6	Colorado 150b pinza di massa 150a Colorado 150b pince de masse 150a Colorado 150b work clamp 150a Colorado 150b masseklemme 150a Colorado 150b pinza de masa 150a	804178
7	Dallas 300 pinza portaelettrodi 300a Dallas 300 pince porte-electrodes 300a Dallas 300 electrode holder 300a Dallas 300 elektrodenzangen 300a Dallas 300 pinza portaelectrodos 300a	804170
8	Pinza di massa + cavo 16mmq 2m ax25 Pince de masse + cable 16mmq 2m ax25 Work clamp + cable 16mmq 2m ax25 Massezange + kabel 16mmq 2m ax25 Pinca de masa + cable 16mmq 2m ax25	804120
9	Pinza portaelettrodo+ cavo 16mmq 3m ax25 Pince portelectrode+ cable 16mmq 3m ax25 Electrode holder + cable 16mmq 3m ax25 Elektrondehalter + kabel 16mmq 3m ax25 Pinca portaelectrodo+cable 16mmq 3m ax25	804121
10	Kit diodi Kit diodes Diode kit Diode kit Kit diodo	981591
11	Kit scheda completa Kit platine complete Complete control pcb kit Komplette steuerungskarte kit Kit tarjeta de controlo completa	982054
12	Kit condensatore snap-in Kit condensateur snap-in Condenser kit snap-in Kondensator kit snap-in Kit condensator snap-in	982269
13	Kit potenziometro + manopole Kit potentiometre + poignees Kit potentiometer + knobs Kit potentiometer + knopfs Kit potenciometro + mandos	982271
14	Kit lamiere metallo Kit toles metalliques Metal sheet kit Metalblätter kit Kit hojas de metal	982272
15	Kit atlas 25mmq Kit atlas 25mmq Kit atlas 25mmq Kit atlas 25mmq Kit atlas 25mmq	982274
16	Kit componenti aux. Kit composants aux. Kit aux. Components Kit aux. Bauteile Kit componentes aux.	982281

Schema elettrico, Schéma électrique, Diagram, Schaltplan, Esquema de conexiones.

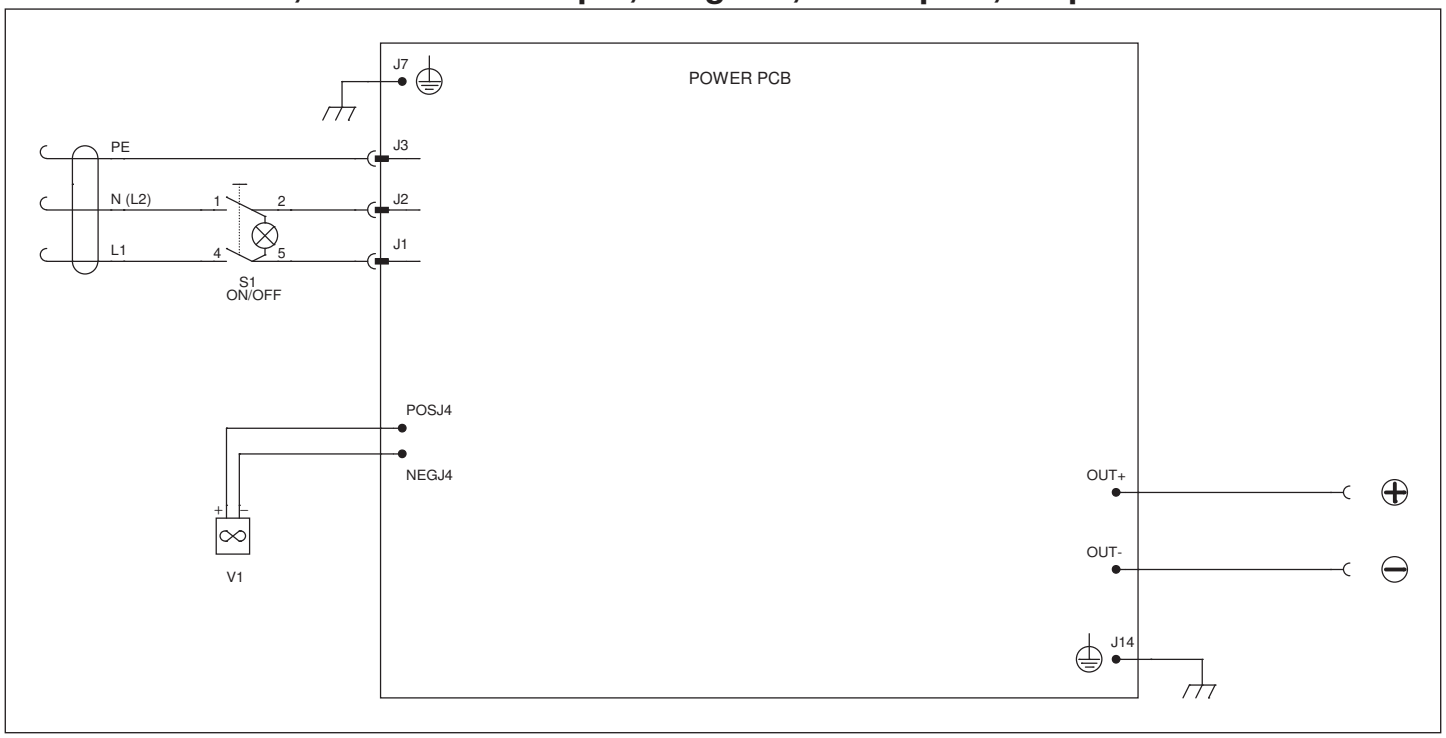

ELENCO PEZZI DI RICAMBIO
LISTE PIECES DETACHEES
SPARE PARTS LIST
ERSATZTEILLISTE
PIEZAS DE REPUESTO

T-ARC 210

ELEMENTS LINE

TELWIN

Esploso macchina, Dessin appareil, Machine drawing, Explosions Zeichnung des Geräts, Diseño seccionado maquina.

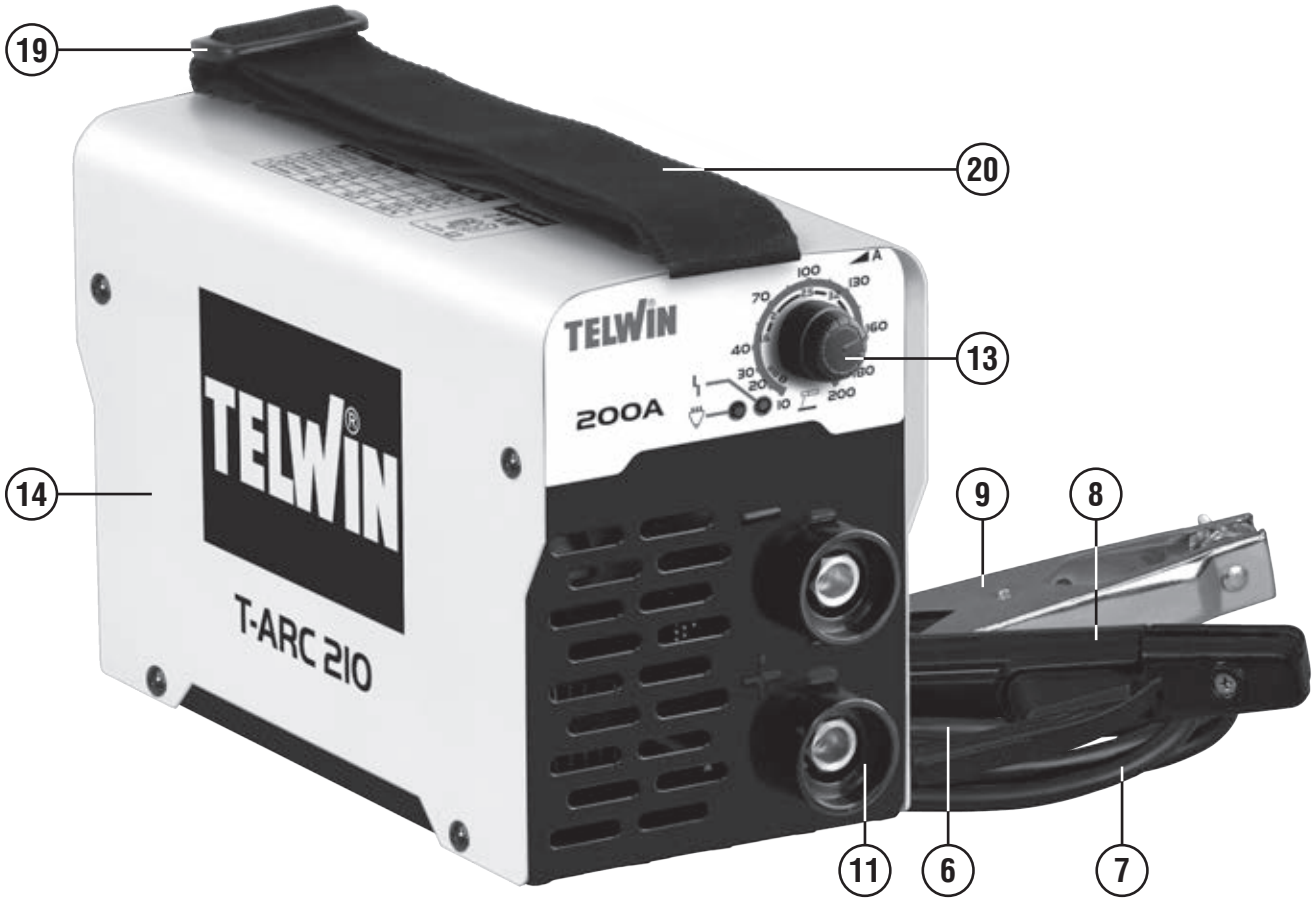

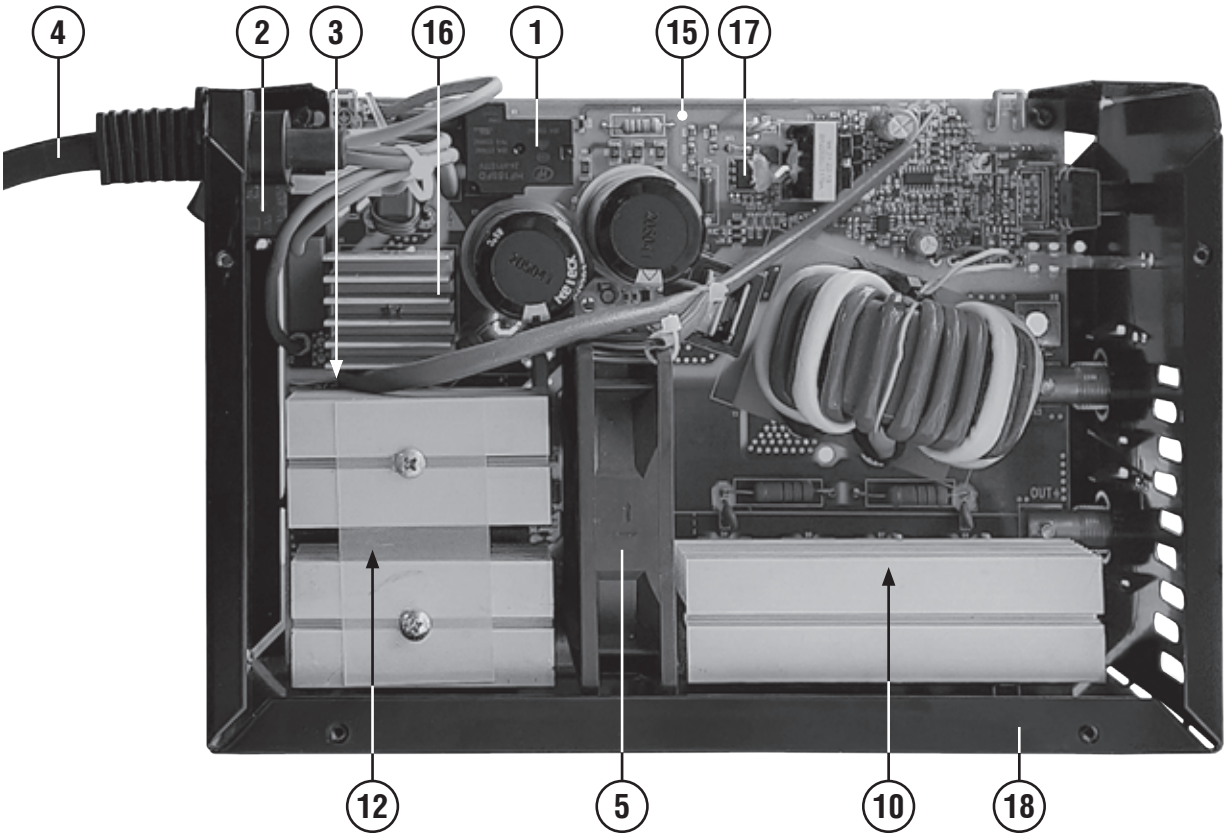

REF.	ELENCO PEZZI DI RICAMBIO PIECES DETACHEES SPARE PARTS LIST ERSATZTEILLISTE PIEZAS DE REPUESTO	CODICE CODE KODE
1	Rele' 24vdc 40ma 250v 30a 1no Relais 24vdc 40ma 250v 30a 1no Relais 24vdc 40ma 250v 30a 1no Relais 24vdc 40ma 250v 30a 1no Relais 24vdc 40ma 250v 30a 1no	111406
2	Interruttore Interrupteur Switch Schalter Interruptor	121248
3	Termostato 10,0a 250v 090° 065° nc Thermostat 10,0a 250v 090° 065° nc Thermal switch 10,0a 250v 090° 065° nc Thermostat 10,0a 250v 090° 065° nc Termostato 10,0a 250v 090° 065° nc	121815
4	Cavo alim. H05rn-f 3g02,50 l=02.30 Cable alim. H05rn-f 3g02,50 l=02.30 Mains cable h05rn-f 3g02,50 l=02.30 Netzkabel h05rn-f 3g02,50 l=02.30 Cable alim. H05rn-f 3g02,50 l=02.30	132486
5	Ventilatore 24vdc 92x 92x25 Ventilateur 24vdc 92x 92x25 Fan 24vdc 92x 92x25 Ventilator 24vdc 92x 92x25 Ventilador 24vdc 92x 92x25	152360
6	Pinza di massa + cavo 16mmq 2m ax25 Pince de masse + cable 16mmq 2m ax25 Work clamp + cable 16mmq 2m ax25 Massezange + kabel 16mmq 2m ax25 Pinca de masa + cable 16mmq 2m ax25	804120
7	Pinza portaelettrodo+ cavo 16mmq 3m ax25 Pince portelectrode+ cable 16mmq 3m ax25 Electrode holder + cable 16mmq 3m ax25 Elektrondehalter + kabel 16mmq 3m ax25 Pinca portaelectrodo+cable 16mmq 3m ax25	804121
8	Dallas 300 pinza portaelettrodi 300a Dallas 300 pince porte-electrodes 300a Dallas 300 electrode holder 300a Dallas 300 elektrodenzangen 300a Dallas 300 pinza portaelectrodos 300a	804170
9	Toledo 250 pinza di massa 250a Toledo 250 pince de masse 250a Toledo 250 work clamp 250a Toledo 250 masseklemme 250a Toledo 250 pinza de masa 250a	804181
10	Kit diodi Kit diodes Diode kit Diode kit Kit diodo	981583
11	Kit prese atlas 25mmq Kit prises atlas25mmq Atlas sockets kit 25mmq Atlas steckdose kit 25mmq Kit enchufes atlas 25mmq	981587
12	Kit igbt + diodi Kit igbt + diodes Igbt + diodes kit Igbt + dioden kit Kit igbt + diodos	982558
13	Kit potenziometro + manopole Kit potentiometre + poignees Kit potentiometer + knobs Kit potentiometer + knopfs Kit potenciometro + mandos	982271
14	Kit mantello Kit capot Cover kit Deckel kit Kit panel de cobertura	982354
15	Kit scheda completa Kit platine complete Complete control pcb kit Komplette steurungskarte kit Kit tarjeta de controlo completa	982355
16	Kit ponte + condensatori snap-in Kit pont + condensateurs snap-in Bridge + snap-in condenser kit Brücke + snap-in kondensator kit Kit puente + condensatores snap-in	982394
17	Kit componenti alimentatore Kit generateur composants Kit power supply components Kit stromquelle bauteile Kit generador componentes	982395
18	Frontale Partie frontal Front panel Gerätefront Frontal	645960
19	Fibbia per cinghia Boucle pour courroie Belt buckle Gurtschnalle Hebilla para correa	322065
20	Cinghia Courroie Belt Gurt Correa	322408

Schema elettrico, Schéma électrique, Diagram, Schaltplan, Esquema de conexiones.

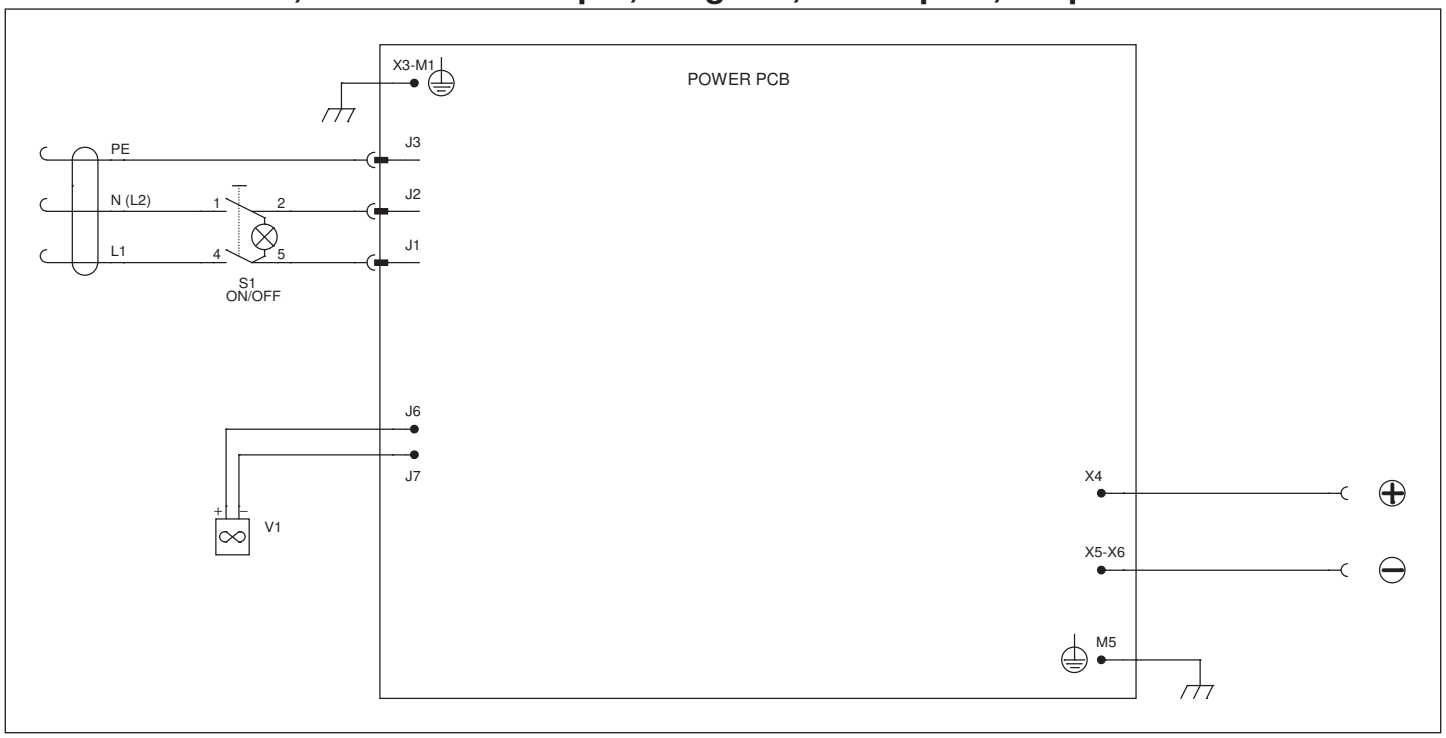

ELENCO PEZZI DI RICAMBIO
LISTE PIECES DETACHEES
SPARE PARTS LIST
ERSATZTEILLISTE
PIEZAS DE REPUESTO

INFINITY 120

ELEMENTS LINE

TELWIN

Esploso macchina, Dessin appareil, Machine drawing, Explosions Zeichnung des Geräts, Diseño seccionado maquina.



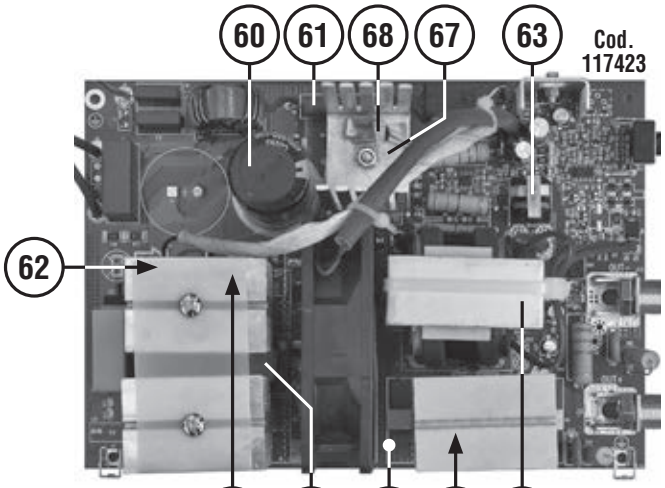

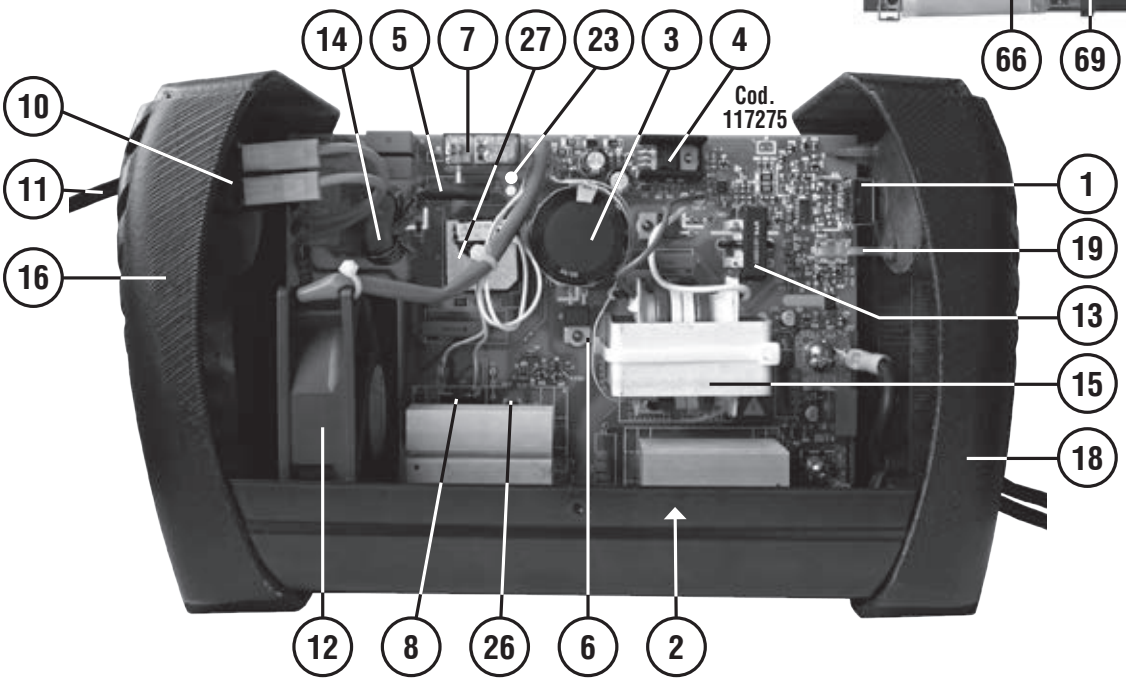

REF.	ELENCO PEZZI DI RICAMBIO PIECES DETACHEES SPARE PARTS LIST ERSATZTEILLISTE PIEZAS DE REPUESTO	CODICE CODE KODE
1	Pot. Carb. 10k lin. 0.20w 20% Pot. Carb. 10k lin. 0.20w 20% Pot. Carb. 10k lin. 0.20w 20% Pot. Carb. 10k lin. 0.20w 20% Pot. Carb. 10k lin. 0.20w 20%	112017
2	Diodo Diode Diode Diode Diodo	112948
3	Condensatore Condensateur Capacitor Kondensator Condensador	113122
4	Transistor 100v Transistor 100v Transistor 100v Transistor 100v Transistor 100v	116171
5	Resistenza Resistance Resistance Widerstand Resistencia	116328
6	Diodo Diode Diode Diode Diodo	116694
7	Rele' 24vdc 17ma 250v 16a 1no Relais 24vdc 17ma 250v 16a 1no Relais 24vdc 17ma 250v 16a 1no Relais 24vdc 17ma 250v 16a 1no Conectador 24vdc 17ma 250v 16a 1no	116738
8	Termostato 10,0a 250v 085° 063° nc Thermostat 10,0a 250v 085° 063° nc Thermal switch 10,0a 250v 085° 063° nc Thermostat 10,0a 250v 085° 063° nc Termostato 10,0a 250v 085° 063° nc	121249
9	Manopola Poignee Knob Griff Manija	121395
10	Interruttore Interrupteur Switch Schalter Interruptor	122381
11	Cavo alim. 3g1.5 2 M spina schuko Cable alim. 3g1.5 2 M fiche schuko Mains cable 3g1.5 2 M schuko plug Netzkabel 3g1.5 2 M schuko stecker Cable alim. 3g1.5 2 M espina schuko	132155
12	Ventilatore 24vdc 92x 92x25 Ventilateur 24vdc 92x 92x25 Fan 24vdc 92x 92x25 Ventilator 24vdc 92x 92x25 Ventilador 24vdc 92x 92x25	152901
13	Ta 1/100 Ta 1/100 Ta 1/100 Ta 1/100 Ta 1/100	152266
14	Induttanza filtro Inductance filter Filter inductance Filter drossel Induccion filtro	164741
15	Trasformatore potenza Transformateur de puissance Power trafo Leistungstransformer Transformador de potencia	169638
16	Retro Partie arriere Back panel Rueckseite Trasera	322894
17	Manico Poignee Handle Handgriff Manija	322895
18	Frontale Partie arriere Front panel Stimbrett Frontal	322896
19	Guida luce Guide Guide Führung Guia	322898
20	Dallas 300 pinza portaelettrodi 300a Dallas 300 pince porte-electrodes 300a Dallas 300 electrode holder 300a Dallas 300 elektrodenhalter 300a Dallas 300 pinza portaelectrodos 300a	712260
21	Cavo 6mmq 1.8m pinza di massa-occhiello Cable 6mmq 1.8m pince de masse-cosse Cable 6mmq 1.8m work clamp-eyelet Kabel 6mmq 1.8m massezange-augen Cable 6mmq 1.8m pinca de masa-oiete	713254
22	Cavo 6 mmq 1.8 M occhiello Cable 6 mmq 1.8 M oeillet Cable 6 mmq 1.8 M eyelet Kabel 6 mmq 1.8 M öse Cable 6 mmq 1.8 M ojete	713255
23	Kit scheda completa Kit platine complete Complete control pcb kit Komplette steurungskarte kit Kit tarjeta de controlo completa	982053
24	Kit mantello Kit capot Cover kit Deckelkit Kit panel de cobertura	981811
25	Kit fondo Kit chassis Bottom kit Bodenteil kit Kit fondo	980786
26	Kit igbt + diodo Kit igbt + diode Igbt + diode kit Igbt + diode kit Kit igbt + diodo	980787
27	Kit ponte + termostato Kit pont + thermostat Bridge + thermal switch kit Bruecke + thermostat kit Kit puente + termostato	980801
60	Cap. All.Rad 680u 400v -20%+20% p10 Cap. All.Rad 680u 400v -20%+20% p10 Cap. All.Rad 680u 400v -20%+20% p10 Cap. All.Rad 680u 400v -20%+20% p10 Cap. All.Rad 680u 400v -20%+20% p10	111332
61	Res. Filo 47r 8w 5% Res. Fil 47r 8w 5% Res. Wire 47r 8w 5% Res. Draht 47r 8w 5% Res. Hilo 47r 8w 5%	112048
62	Termostato Thermostat Thermostat Thermostat Termostato	121762
63	Ta 1/300 30a 50khz Ta 1/300 30a 50khz Ta 1/300 30a 50khz Ta 1/300 30a 50khz Ta 1/300 30a 50khz	152312
64	Trasformatore pot.2xe55 1.5:15:15:04 Transformateur puis.2xe55 1.5:15:15:04 Power trafo 2xe55 1.5:15:15:04 Leistungstransfo 2xe55 1.5:15:15:04 Transformador pot.2xe55 1.5:15:15:04	169631
66	Kit igbt + diodi Kit igbt + diodes Kit igbt + diodes Kit igbt + dioden Kit igbt + diodos	982051
67	Kit ponte monofase Kit pont monophase Single phase bridge kit Einfasige brücke kit Kit puente monofasico	981824
68	Termostato 05,0a 250v 080° nc Termostato 05,0a 250v 080° nc Termal switch 05,0a 250v 080° nc Termostato 05,0a 250v 080° nc Termostato 05,0a 250v 080° nc	121798
69	Trasformatore impulsi Transformateur d'impulsions Impulse transformer Impuls-transformator Transformador de impulsos	152316
70	Kit diodi Kit diodes Diode kit Diode kit Kit diodo	981591

Schema elettrico, Schéma électrique, Diagram, Schaltplan, Esquema de conexiones.

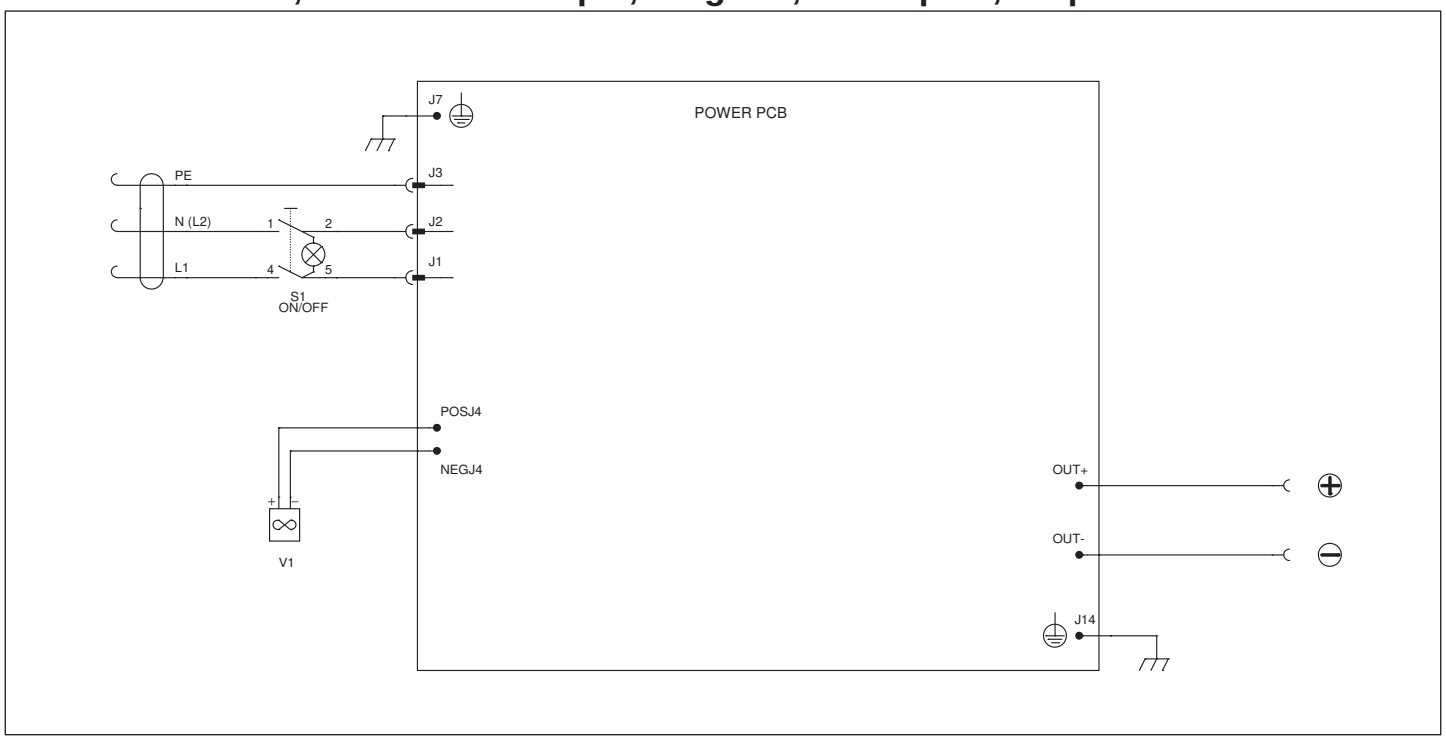

ELENCO PEZZI DI RICAMBIO
LISTE PIECES DETACHEES
SPARE PARTS LIST
ERSATZTEILLISTE
PIEZAS DE REPUESTO

INFINITY 150

ELEMENTS LINE

TELWIN

Esploso macchina, Dessin appareil, Machine drawing, Explosions Zeichnung des Geräts, Diseño seccionado maquina.



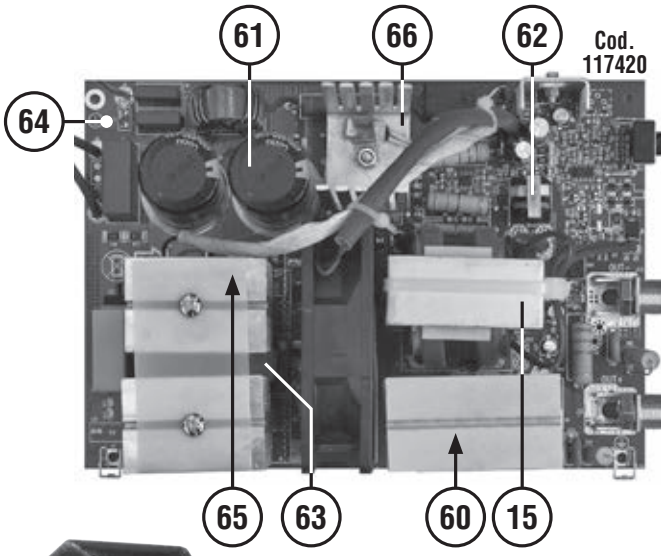

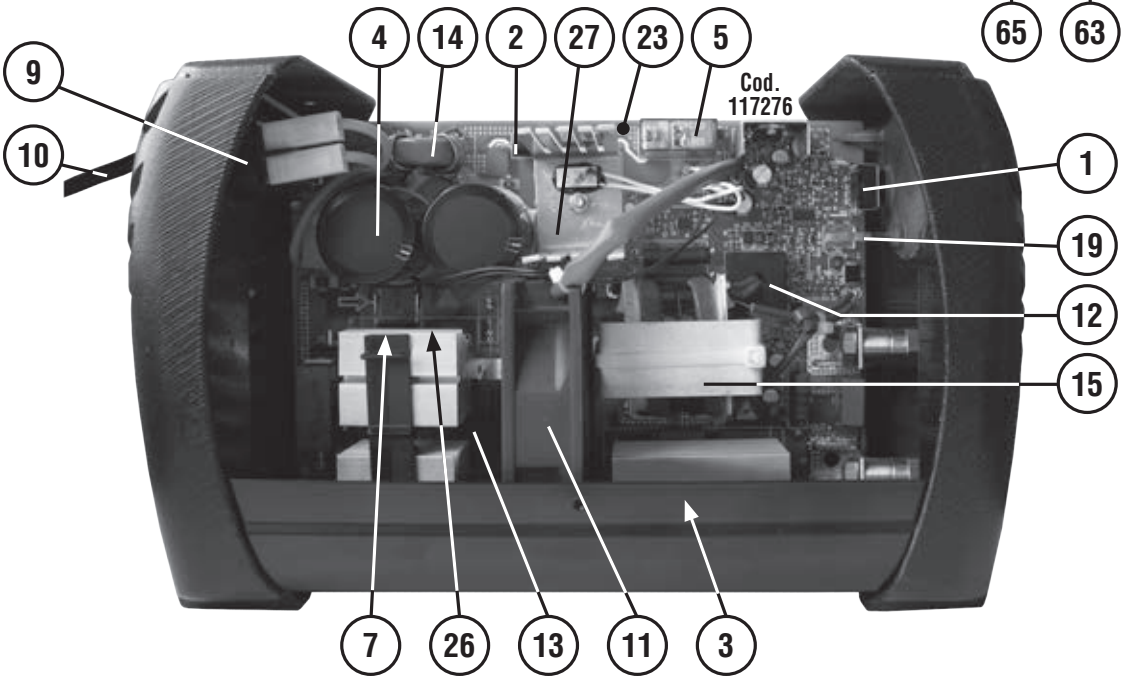

REF.	ELENCO PEZZI DI RICAMBIO PIECES DETACHEES SPARE PARTS LIST ERSATZTEILLISTE PIEZAS DE REPUESTO	CODICE CODE KODE
1	Pot. Carb. 10k lin. 0.20w 20% Pot. Carb. 10k lin. 0.20w 20% Pot. Carb. 10k lin. 0.20w 20% Pot. Carb. 10k lin. 0.20w 20% Pot. Carb. 10k lin. 0.20w 20%	112017
2	Res. Filo 47r 8w 5% Res. Fil 47r 8w 5% Res. Wire 47r 8w 5% Res. Draht 47r 8w 5% Res. Hilo 47r 8w 5%	112048
3	Kit diodi Kit diodes Diode kit Diode kit Kit diodo	981332
4	Condensatore Condensateur Capacitor Kondensator Capacitor	112514
5	Rele' 24vdc 17ma 250v 16a 1no Relais 24vdc 17ma 250v 16a 1no Relais 24vdc 17ma 250v 16a 1no Relais 24vdc 17ma 250v 16a 1no Conectador 24vdc 17ma 250v 16a 1no	116738
6	Cavo 16 mmq 1,8 m - spina atlas 25 Cable 16 mmq 1,8 m - fiche atlas 25 Cable 16 mmq 1,8 m - plug atlas 25 Kabel 16 mmq 1,8 m - stecker atlas 25 Cable 16 mmq 1,8 m - enchufe atlas 25	124508
7	Termostato 10,0a 250v 085° 063° nc Thermostat 10,0a 250v 085° 063° nc Thermal switch 10,0a 250v 085° 063° nc Thermostat 10,0a 250v 085° 063° nc Termostato 10,0a 250v 085° 063° nc	121249
8	Manopola Poignee Knob Griff Manija	121395
9	Interruttore Interrupteur Switch Schalter Interruptor	122381
10	Cavo alim. 3g1.5 2 M spina schuko Cable alim. 3g1.5 2 M fiche schuko Mains cable 3g1.5 2 M schuko plug Netzkabel 3g1.5 2 M schuko stecker Cable alim. 3g1.5 2 M espina schuko	132155
11	Ventilatore 24vdc 92x 92x25 Ventilateur 24vdc 92x 92x25 Fan 24vdc 92x 92x25 Ventilator 24vdc 92x 92x25 Ventilador 24vdc 92x 92x25	152901
12	Trasformatore di corrente Transformateur de courant Current transformer Stromwandler Transformador de corriente	152230
13	Trasformatore impulsi Transformateur d'impulsions Impulse transformer Impuls-transformator Transformador de impulsos	152247
14	Induttanza filtro Inductance filter Filter inductance Filter drossel Induccion filtro	164741
15	Trasformatore pot.2xe55 1.5:15:15:04 Transformateur puis.2xe55 1.5:15:15:04 Power trafo 2xe55 1.5:15:15:04 Leistungstransfo 2xe55 1.5:15:15:04 Transformador pot.2xe55 1.5:15:15:04	169631
16	Frontale Partie frontal Front panel Geraetefront Frontal	322893
17	Retro Partie arriere Back panel Rueckseite Trasera	322894
18	Manico Poignee Handle Handgriff Manija	322895
19	Guida luce Guide Guide Führung Guia	322898
20	Presa atlas 25mmq Prise atlas 25mmq Socket atlas 25mmq Steckdose atlas 25mmq Enchufe atlas 25mmq	712000
21	Colorado 150b pinza di massa 150a Colorado 150b pince de masse 150a Colorado 150b work clamp 150a Colorado 150b masseklemme 150a Colorado 150b pinza de masa 150a	712001
22	Dallas 300 pinza portaelettrodi 300a Dallas 300 pince porte-electrodes 300a Dallas 300 electrode holder 300a Dallas 300 elektrodenhalter 300a Dallas 300 pinza portaelectrodos 300a	712260
24	Kit mantello Kit capot Cover kit Deckelkit Kit panel de cobertura	981813
25	Kit fondo Kit chassis Bottom kit Bodenteil kit Kit fondo	980786
26	Kit igbt + diodo Kit igbt + diode Igbt + diode kit Igbt + diode kit Kit igbt + diodo	980789
27	Kit ponte + termostato Kit pont + thermostat Bridge + thermal switch kit Bruecke + thermostat kit Kit puente + termostato	980802
29	Spina atlas 25mmq Fiche atlas 25mmq Atlas plug 25mmq Atlas stecker 25mmq Enchufe atlas 25mmq	712039
60	Kit diodi Kit diodes Diode kit Diode kit Kit diodo	981591
61	Cap. All.Rad 680u 400v -20%+20% p10 Cap. All.Rad 680u 400v -20%+20% p10 Cap. All.Rad 680u 400v -20%+20% p10 Cap. All.Rad 680u 400v -20%+20% p10 Cap. All.Rad 680u 400v -20%+20% p10	111332
62	Ta 1/300 30a 50khz Ta 1/300 30a 50khz Ta 1/300 30a 50khz Ta 1/300 30a 50khz Ta 1/300 30a 50khz	152312
63	Trasformatore impulsi Transformateur d'impulsions Impulse transformer Impuls-transformator Transformador de impulsos	152316
64	Kit scheda completa Kit platine complete Complete control pcb kit Komplette steurungskarte kit Kit tarjeta de controlo completa	982054
65	Kit igbt + diodi Kit igbt + diodes Kit igbt + diodes Kit igbt + dioden Kit igbt + diodos	982051
66	Kit ponte monofase Kit pont monophase Single phase bridge kit Einfasige brücke kit Kit puente monofasico	981824

Schema elettrico, Schéma électrique, Diagram, Schaltplan, Esquema de conexiones.

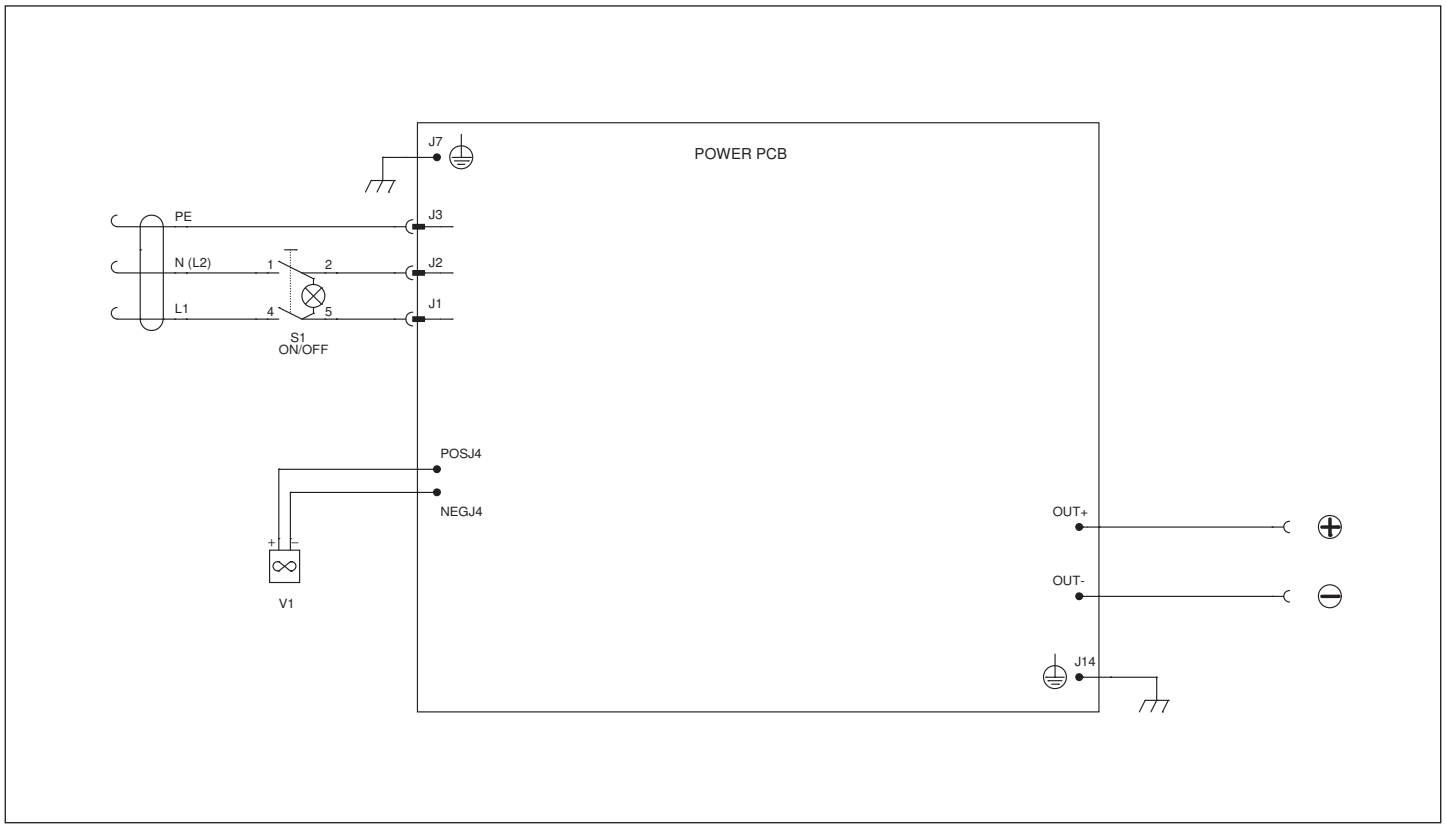

ELENCO PEZZI DI RICAMBIO
LISTE PIECES DETACHEES
SPARE PARTS LIST
ERSATZTEILLISTE
PIEZAS DE REPUESTO

INFINITY 170

ELEMENTS LINE

TELWIN

Esploso macchina, Dessin appareil, Machine drawing, Explosions Zeichnung des Geräts, Diseño seccionado maquina.



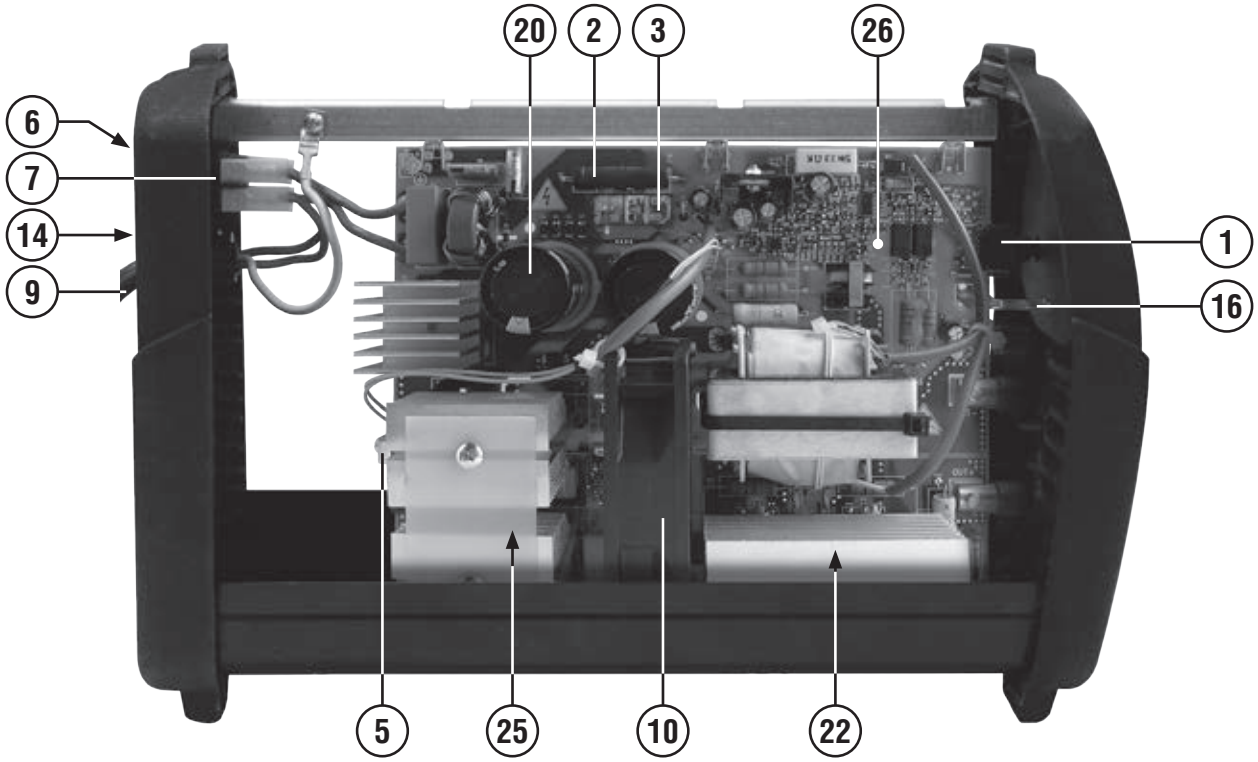

REF.	ELENCO PEZZI DI RICAMBIO PIECES DETACHEES SPARE PARTS LIST ERSATZTEILLISTE PIEZAS DE REPUESTO	CODICE CODE KODE
1	Pot. Carb. 10k lin. 0.20w 20% Pot. Carb. 10k lin. 0.20w 20% Pot. Carb. 10k lin. 0.20w 20% Pot. Carb. 10k lin. 0.20w 20% Pot. Carb. 10k lin. 0.20w 20%	112017
2	Res. Filo 47r 8w 5% Res. Fil 47r 8w 5% Res. Wire 47r 8w 5% Res. Draht 47r 8w 5% Res. Hilo 47r 8w 5%	112048
3	Rele' 24vdc 17ma 250v 16a 1no Relais 24vdc 17ma 250v 16a 1no Relais 24vdc 17ma 250v 16a 1no Relais 24vdc 17ma 250v 16a 1no Conectador 24vdc 17ma 250v 16a 1no	116738
4	Manopola Poignee Knob Griff Manija	121395
5	Termostato Thermostat Thermostat Thermostat Termostato	121761
6	Copri interruttore Couvre interrupteur Switch cover Schalterdeckel Cubre interruptor	122353
7	Interruttore Interrupteur Switch Schalter Interruptor	122381
8	Cavo 16 mmq 1,8 m - spina atlas 25 Cable 16 mmq 1,8 m - fiche atlas 25 Cable 16 mmq 1,8 m - plug atlas 25 Kabel 16 mmq 1,8 m - stecker atlas 25 Cable 16 mmq 1,8 m - enchufe atlas 25	124508
9	Cavo alim. H05vv-f 3g01.50 L=02.50 Cable alim. H05vv-f 3g01.50 L=02.50 Mains cable h05vv-f 3g01.50 L=02.50 Netzkabel h05vv-f 3g01.50 L=02.50 Cable alim. H05vv-f 3g01.50 L=02.50	132457
10	Ventilatore Ventilateur Fan Ventilator Ventilador	152294
11	Frontale Partie frontal Front panel Gerätefront Frontal	321219
12	Retro Partie arriere Back panel Rückseite Trasera	321377
13	Fibbia per cinghia Boucle pour courroie Belt buckle Gurtschnalle Hebilla para correa	322065
14	Pressacavo Presse cable Cable bushing Kabelhalter Prensa cable	322112
15	Cinghia Courroie Belt Gurt Correa	322408
16	Guida luce Guide Guide Führung Guia	322898
17	Toledo 250 pinza di massa 250a Toledo 250 pince de masse 250a Toledo 250 work clamp 250a Toledo 250 masseklemme 250a Toledo 250 pinza de masa 250a	712030
18	Spina atlas 25mmq Fiche atlas 25mmq Atlas plug 25mmq Atlas stecker 25mmq Enchufe atlas 25mmq	712039
19	Dallas 300 pinza portaelettrodi 300a Dallas 300 pince porte-electrodes 300a Dallas 300 electrode holder 300a Dallas 300 elektrodenhalter 300a Dallas 300 pinza portaelectrodos 300a	712260
20	Kit condensatore snap-in Kit condensateur snap-in Condenser kit snap-in Kondensator kit snap-in Kit condensator snap-in	981584
21	Kit prese atlas 25mmq Kit prises atlas25mmq Atlas sockets kit 25mmq Atlas steckdose kit 25mmq Kit enchufes atlas 25mmq	981587
22	Kit diodi Kit diodes Diode kit Diode kit Kit diodo	981591
23	Kit fondo Kit chassis Bottom kit Bodenteil kit Kit fondo	981788
25	Kit igbt + diodi Kit igbt + diodes Kit igbt + diodes Kit igbt + dioden Kit igbt + diodos	982051
26	Kit scheda potenza Kit carte puissance Power board kit Leistungskartekit Kit tarjeta potencia	982111
27	Kit mantello Kit capot Cover kit Deckel kit Kit panel de cobertura	982112

Schema elettrico, Schéma électrique, Diagram, Schaltplan, Esquema de conexiones.

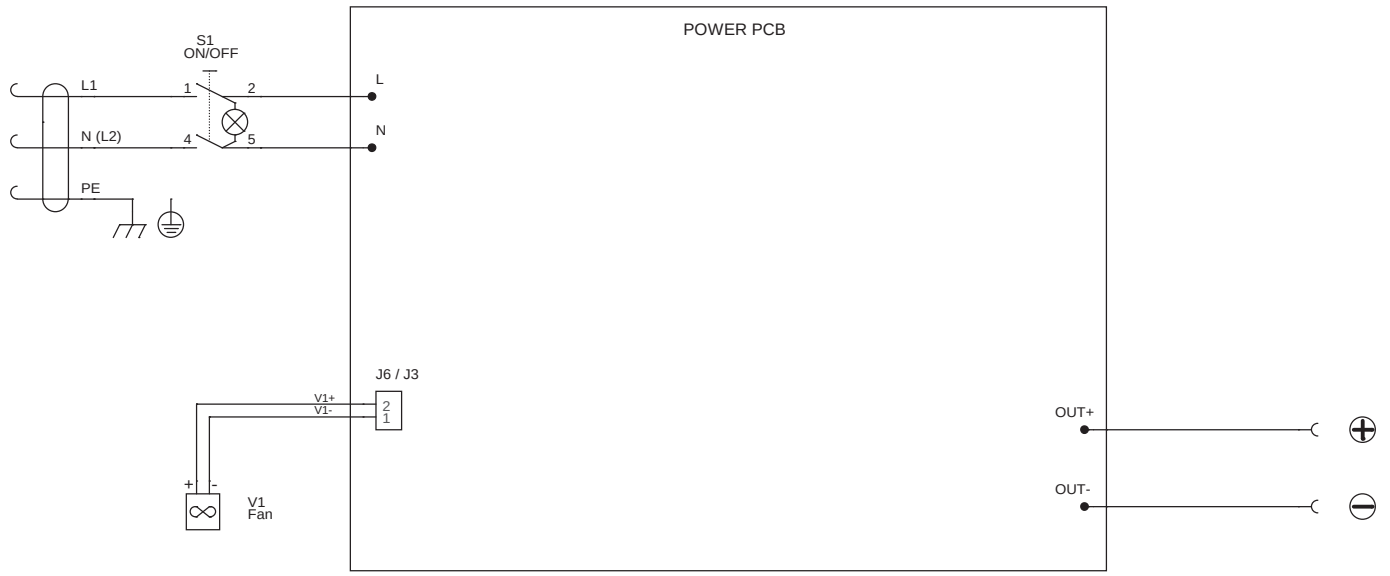

ELENCO PEZZI DI RICAMBIO
LISTE PIECES DETACHEES
SPARE PARTS LIST
ERSATZTEILLISTE
PIEZAS DE REPUESTO

INFINITY 172

ELEMENTS LINE

TELWIN

Esploso macchina, Dessin appareil, Machine drawing, Explosions Zeichnung des Geräts, Diseño seccionado maquina.



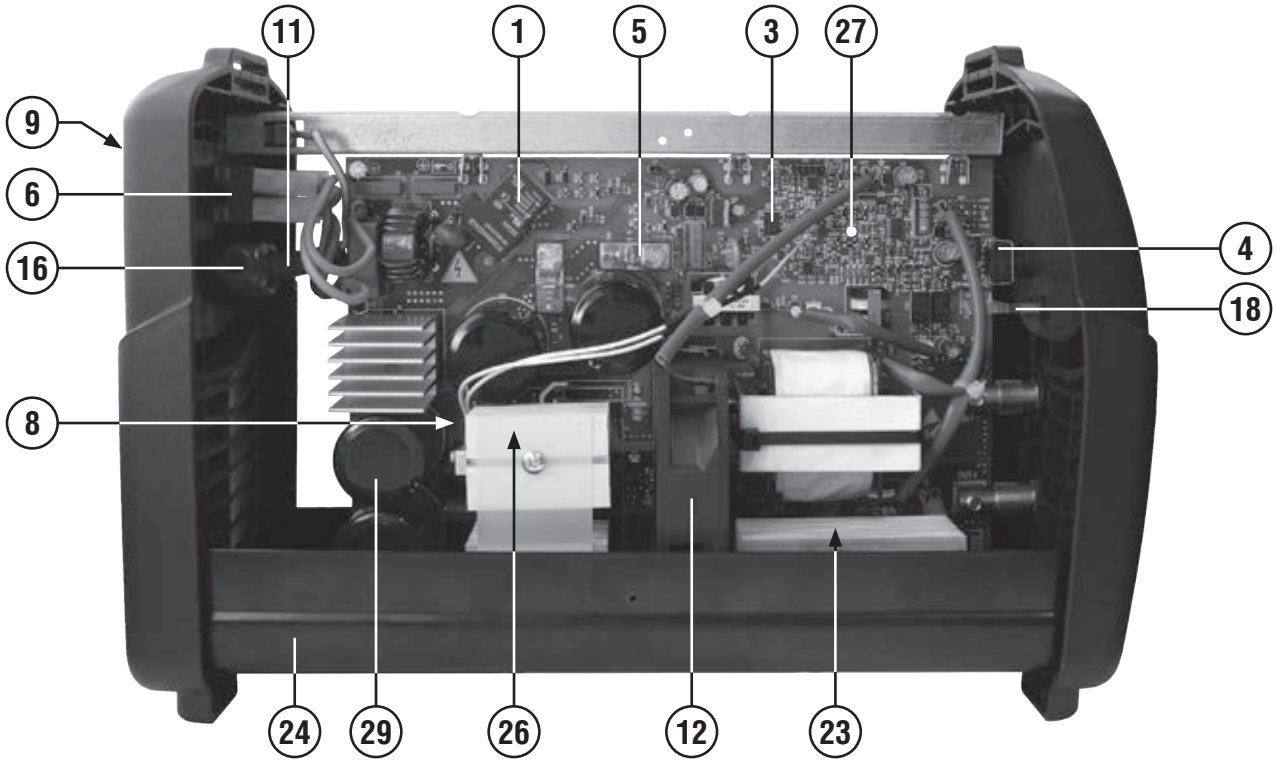

REF.	ELENCO PEZZI DI RICAMBIO PIECES DETACHEES SPARE PARTS LIST ERSATZTEILLISTE PIEZAS DE REPUESTO	CODICE CODE KODE
1	Rele' 24vdc 40ma 250v 30a 1no Relais 24vdc 40ma 250v 30a 1no Relais 24vdc 40ma 250v 30a 1no Relais 24vdc 40ma 250v 30a 1no Relais 24vdc 40ma 250v 30a 1no	111406
3	Pwm controller Pwm controller Pwm controller Pwm controller Pwm controller	111601
4	Pot. Carb. 10k lin. 0.20w 20% Pot. Carb. 10k lin. 0.20w 20% Pot. Carb. 10k lin. 0.20w 20% Pot. Carb. 10k lin. 0.20w 20% Pot. Carb. 10k lin. 0.20w 20%	112017
5	Rele Relais Relais Relais Conectador	113630
6	Interruttore Interrupteur Switch Schalter Interruptor	121248
7	Manopola Poignee Knob Griff Manija	121395
8	Termostato Thermostat Thermostat Thermostat Termostato	121761
9	Copri interruttore Couvre interrupteur Switch cover Schalterdeckel Cubre interruptor	122353
10	Cavo 16 mmq 1,8 m - spina atlas 25 Cable 16 mmq 1,8 m - fiche atlas 25 Cable 16 mmq 1,8 m - plug atlas 25 Kabel 16 mmq 1,8 m - stecker atlas 25 Cable 16 mmq 1,8 m - enchufe atlas 25	124508
11	Cavo alim. H05vv-f 3g02.50 L=02.50 Cable alim. H05vv-f 3g02.50 L=02.50 Mains cable h05vv-f 3g02.50 L=02.50 Netzkabel h05vv-f 3g02.50 L=02.50 Cable alim. H05vv-f 3g02.50 L=02.50	132456
12	Ventilatore Ventilateur Fan Ventilator Ventilador	152294
13	Frontale Partie frontal Front panel Gerätefront Frontal	321219
14	Retro Partie arriere Back panel Rückseite Trasera	321377
15	Fibbia per cinghia Boucle pour courroie Belt buckle Gurtschnalle Hebilla para correa	322065
16	Pressacavo Presse cable Cable bushing Kabelhalter Prensa cable	322112
17	Cinghia Courroie Belt Gurt Correa	322408
18	Guida luce Guide Guide Führung Guia	322898
19	Toledo 250 pinza di massa 250a Toledo 250 pince de masse 250a Toledo 250 work clamp 250a Toledo 250 masseklemme 250a Toledo 250 pinza de masa 250a	712030
20	Spina atlas 25mmq Fiche atlas 25mmq Atlas plug 25mmq Atlas stecker 25mmq Enchufe atlas 25mmq	712039
21	Dallas 300 pinza portaelettrodi 300a Dallas 300 pince porte-electrodes 300a Dallas 300 electrode holder 300a Dallas 300 elektrodenhalter 300a Dallas 300 pinza portaelectrodos 300a	712260
22	Kit prese atlas 25mmq Kit prises atlas25mmq Atlas sockets kit 25mmq Atlas steckdose kit 25mmq Kit enchufes atlas 25mmq	981587
23	Kit diodi Kit diodes Diode kit Diode kit Kit diodo	981591
24	Kit fondo Kit chassis Bottom kit Bodenteil kit Kit fondo	981788
26	Kit igbt + diodi Kit igbt + diodes Kit igbt + diodes Kit igbt + dioden Kit igbt + diodos	982051
27	Kit scheda potenza Kit carte puissance Power board kit Leistungskartekit Kit tarjeta potencia	982113
28	Kit mantello Kit capot Cover kit Deckel kit Kit panel de cobertura	982114
29	Kit condensatore snap-in Kit condensateur snap-in Condenser kit snap-in Kondensator kit snap-in Kit condensator snap-in	982143

Schema elettrico, Schéma électrique, Diagram, Schaltplan, Esquema de conexiones.

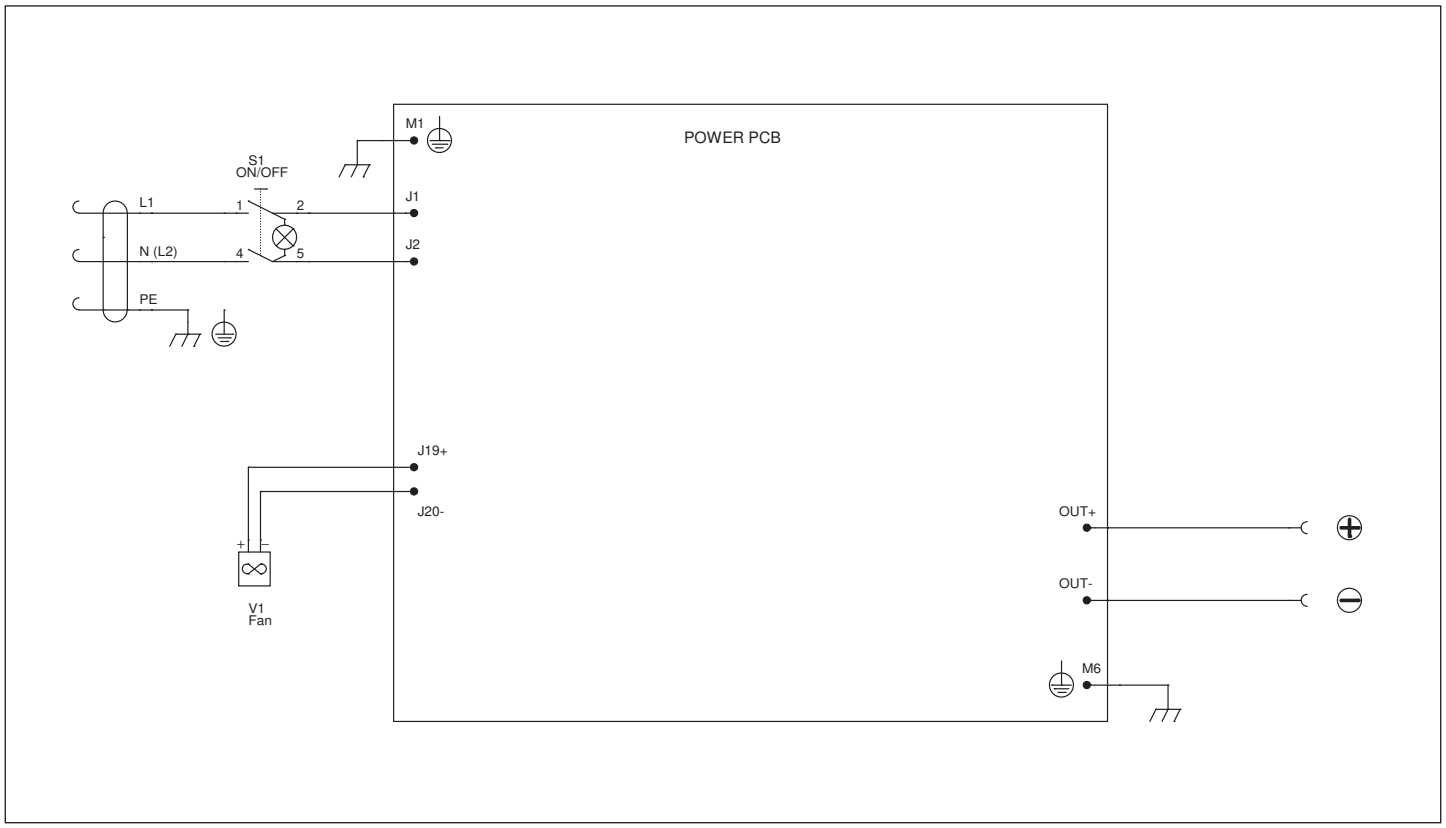

ELENCO PEZZI DI RICAMBIO
LISTE PIECES DETACHEES
SPARE PARTS LIST
ERSATZTEILLISTE
PIEZAS DE REPUESTO

INFINITY 180

ELEMENTS LINE

TELWIN

Esploso macchina, Dessin appareil, Machine drawing, Explosions Zeichnung des Geräts, Diseño seccionado maquina.



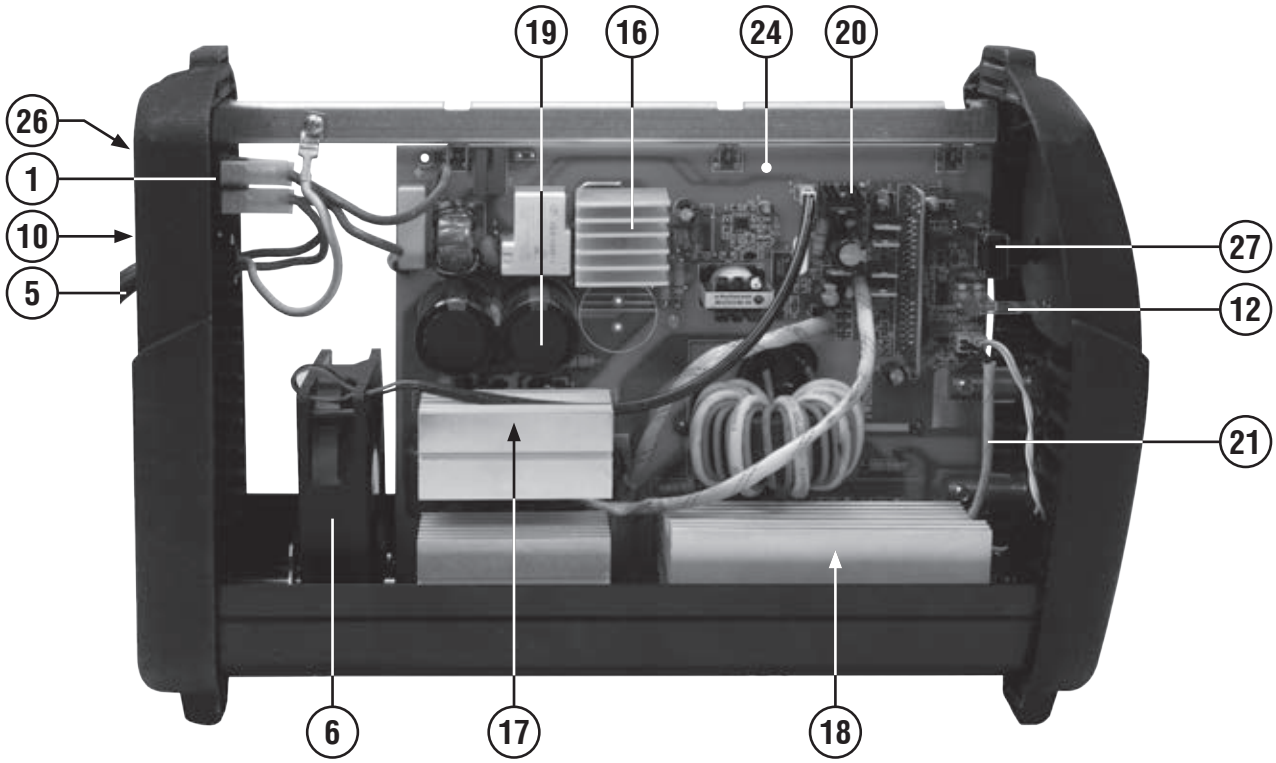

REF.	ELENCO PEZZI DI RICAMBIO PIECES DETACHEES SPARE PARTS LIST ERSATZTEILLISTE PIEZAS DE REPUESTO	CODICE CODE KODE
1	Interruttore Interrupteur Switch Schalter Interruptor	121248
2	Manopola Poignee Knob Griff Manija	121395
3	Cavo 25 mmq 2 m spina atlas 25 Cable 25 mmq 2 m fiche atlas 25 Cable 25 mmq 2 m enchufe atlas 25 Kabel 25 mmq 2 m stecker atlas 25 Cable 25 mmq 2 m enchufe atlas 25	124465
4	Cavo 25 mmq 3 m spina atlas 25 Cable 25 mmq 3 m fiche atlas 25 Cable 25 mmq 3 m plug atlas 25 Kabel 25 mmq 3 m stecker atlas 25 Cable 25 mmq 3 m enchufe atlas 25	124466
5	Cavo alimentazione Cable de reseau Mains cable Netzkabel Cable de alimentation	132157
6	Ventilatore Ventilateur Fan Ventilator Ventilador	152290
7	Frontale Partie frontal Front panel Gerätefront Frontal	321219
8	Retro Partie arriere Back panel Rückseite Trasera	321377
9	Fibbia per cinghia Boucle pour courroie Belt buckle Gurtschnalle Hebilla para correa	322065
10	Pressacavo Presse cable Cable bushing Kabelhalter Prensa cable	322112
11	Cinghia Courroie Belt Gurt Correa	322408
12	Guida luce Guide Guide Führung Guia	322898
13	Toledo 250 pinza di massa 250a Toledo 250 pince de masse 250a Toledo 250 work clamp 250a Toledo 250 masseklemme 250a Toledo 250 pinza de masa 250a	712030
14	Spina atlas 25mmq Fiche atlas 25mmq Atlas plug 25mmq Atlas stecker 25mmq Enchufe atlas 25mmq	712039
15	Dallas 300 pinza portaelettrodi 300a Dallas 300 pince porte-electrodes 300a Dallas 300 electrode holder 300a Dallas 300 elektrodenhalter 300a Dallas 300 pinza portaelectrodos 300a	712260
16	Kit ponte monofase Kit pont monophase Single phase bridge kit Einfasige brücke kit Kit puente monofasico	981581
17	Kit igbt + diodi Kit igbt + diodes Kit igbt + diodes Kit igbt + dioden Kit igbt + diodos	981582
18	Kit diodi Kit diodes Diode kit Diode kit Kit diodo	981583
19	Kit condensatore snap-in Kit condensateur snap-in Condenser kit snap-in Kondensator kit snap-in Kit condensator snap-in	981584
20	Kit mosfet flyback Kit mosfet flyback Mosfet flyback kit Mosfet flyback kit Kit mosfet flyback	981585
21	Kit cablaggio ntc Kit cable ntc Ntc cable kit Ntc kabel kit Kit cable ntc	981586
22	Kit prese atlas 25mmq Kit prises atlas25mmq Atlas sockets kit 25mmq Atlas steckdose kit 25mmq Kit enchufes atlas 25mmq	981587
23	Kit fondo Kit chassis Bottom kit Bodenteil kit Kit fondo	981788
24	Kit scheda potenza Kit platine puissance Power board kit Leistungskartekit Kit tarjeta de potencia	981789
25	Kit mantello Kit capot Cover kit Deckelkit Kit panel de cobertura	981790
26	Copri interruttore Couvre interrupteur Switch cover Schalterdeckel Cubre interruptor	122353
27	Pot. Carb. 1k lin. 0.20w 10% Pot. Carb. 1k lin. 0.20w 10% Pot. Carb. 1k lin. 0.20w 10% Pot. Carb. 1k lin. 0.20w 10% Pot. Carb. 1k lin. 0.20w 10%	111487

Schema elettrico, Schéma électrique, Diagram, Schaltplan, Esquema de conexiones.

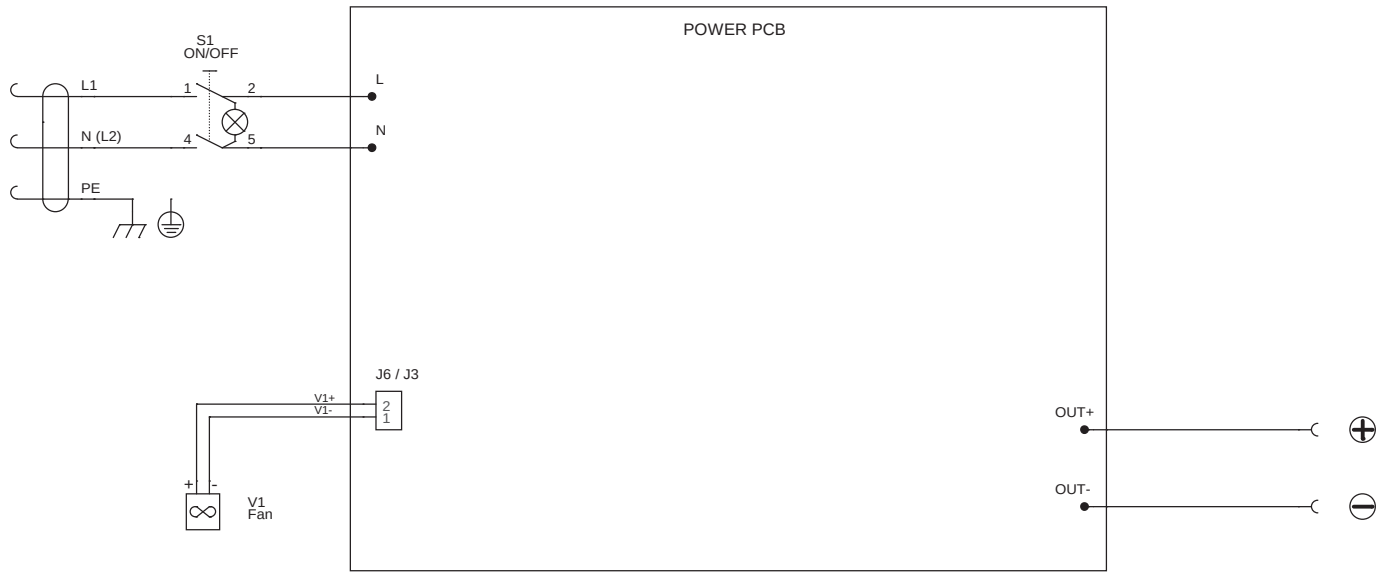

ELENCO PEZZI DI RICAMBIO
LISTE PIECES DETACHEES
SPARE PARTS LIST
ERSATZTEILLISTE
PIEZAS DE REPUESTO

INFINITY 220

ELEMENTS LINE

TELWIN

Esploso macchina, Dessin appareil, Machine drawing, Explosions Zeichnung des Geräts, Diseño seccionado maquina.



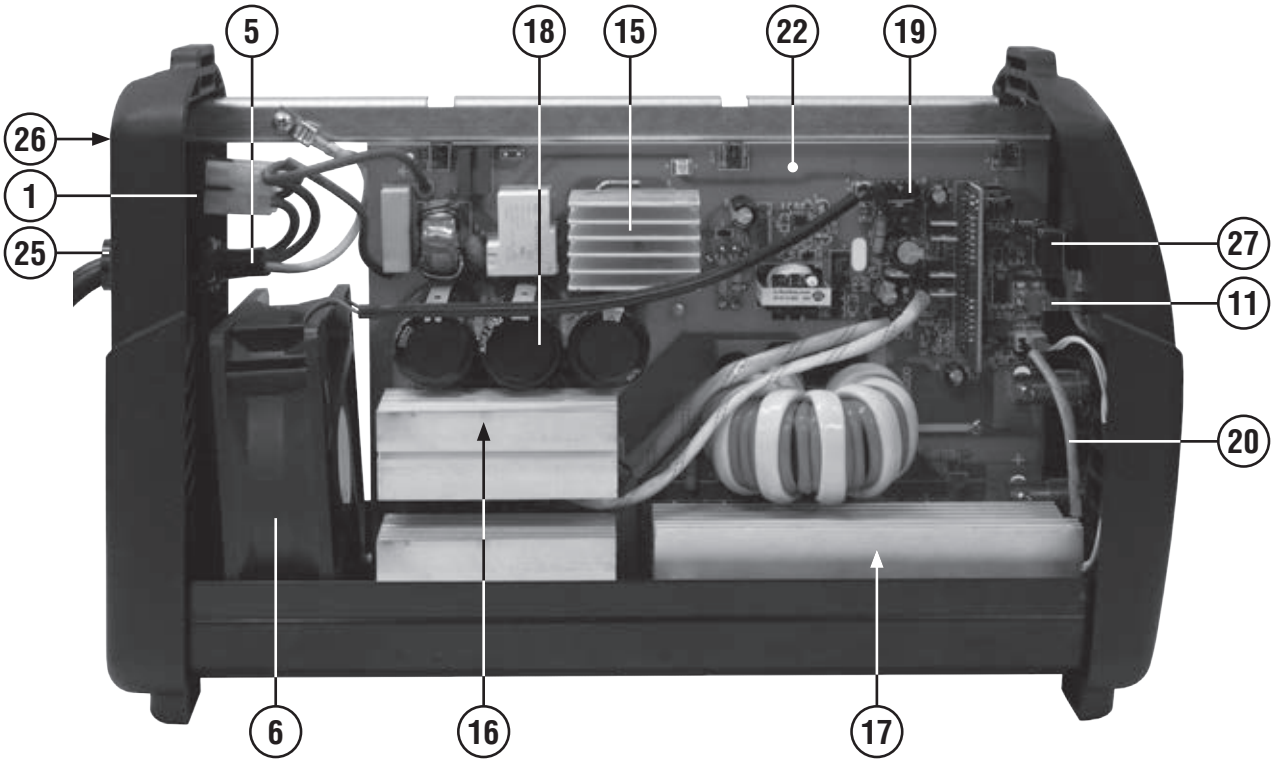

REF.	ELENCO PEZZI DI RICAMBIO PIECES DETACHEES SPARE PARTS LIST ERSATZTEILLISTE PIEZAS DE REPUESTO	CODICE CODE KODE
1	Interruttore Interrupteur Switch Schalter Interruptor	121248
2	Manopola Poignee Knob Griff Manija	121395
3	Cavo 25 mmq 2 m spina atlas 25 Cable 25 mmq 2 m fiche atlas 25 Cable 25 mmq 2 m enchufe atlas 25 Kabel 25 mmq 2 m stecker atlas 25 Cable 25 mmq 2 m enchufe atlas 25	124465
4	Cavo 25 mmq 3 m spina atlas 25 Cable 25 mmq 3 m fiche atlas 25 Cable 25 mmq 3 m plug atlas 25 Kabel 25 mmq 3 m stecker atlas 25 Cable 25 mmq 3 m enchufe atlas 25	124466
5	Cavo alim. 3g04.00 2.00 M Cable alim. 3g04.00 2.00 M Mains cable 3g04.00 2.00 M Netzkabel 3g04.00 2.00 M Cable alim. 3g04.00 2.00 M	132345
6	Ventilatore Ventilateur Fan Ventilator Ventilador	152290
7	Frontale Partie frontal Front panel Gerätefront Frontal	321219
8	Retro Partie arriere Back panel Rückseite Trasera	321377
9	Fibbia per cinghia Boucle pour courroie Belt buckle Gurtschnalle Hebilla para correa	322065
10	Cinghia Courroie Belt Gurt Correa	322408
11	Guida luce Guide Guide Führung Guia	322898
12	Toledo 250 pinza di massa 250a Toledo 250 pince de masse 250a Toledo 250 work clamp 250a Toledo 250 masseklemme 250a Toledo 250 pinza de masa 250a	712030

REF.	ELENCO PEZZI DI RICAMBIO PIECES DETACHEES SPARE PARTS LIST ERSATZTEILLISTE PIEZAS DE REPUESTO	CODICE CODE KODE
13	Spina atlas 25mmq Fiche atlas 25mmq Atlas plug 25mmq Atlas stecker 25mmq Enchufe atlas 25mmq	712039
14	Dallas 300 pinza portaelettrodi 300a Dallas 300 pince porte-electrodes 300a Dallas 300 electrode holder 300a Dallas 300 elektrodenhalter 300a Dallas 300 pinza portaelectrodos 300a	712260
15	Kit ponte monofase Kit pont monophase Single phase bridge kit Einfasige brücke kit Kit puente monofasico	981581
16	Kit igbt + diodi Kit igbt + diodes Kit igbt + diodes Kit igbt + dioden Kit igbt + diodos	981582
17	Kit diodi Kit diodes Diode kit Diode kit Kit diodo	981583
18	Kit condensatore snap-in Kit condensateur snap-in Condenser kit snap-in Kondensator kit snap-in Kit condensator snap-in	981584
19	Kit mosfet flyback Kit mosfet flyback Mosfet flyback kit Mosfet flyback kit Kit mosfet flyback	981585
20	Kit cablaggio ntc Kit cable ntc Ntc cable kit Ntc kabel kit Kit cable ntc	981586
21	Kit prese atlas 25mmq Kit prises atlas25mmq Atlas sockets kit 25mmq Atlas steckdose kit 25mmq Kit enchufes atlas 25mmq	981587
22	Kit scheda potenza Kit platine puissance Power board kit Leistungskartekit Kit tarjeta de potencia	981791
23	Kit mantello Kit capot Cover kit Deckelkit Kit panel de cobertura	981792
24	Kit fondo Kit chassis Bottom kit Bodenteil kit Kit fondo	981793

REF.	ELENCO PEZZI DI RICAMBIO PIECES DETACHEES SPARE PARTS LIST ERSATZTEILLISTE PIEZAS DE REPUESTO	CODICE CODE KODE
25	Kit pressacavo + ghiera Kit presse cable + embout Kit cable bushing + ring nut Kit kabelhalter + nutmutter Kit prensa cable + virola	990046
26	Copri interruttore Couvre interrupteur Switch cover Schalterdeckel Cubre interruptor	122353
27	Pot. Carb. 1k lin. 0.20w 10% Pot. Carb. 1k lin. 0.20w 10% Pot. Carb. 1k lin. 0.20w 10% Pot. Carb. 1k lin. 0.20w 10% Pot. Carb. 1k lin. 0.20w 10%	111487

Schema elettrico, Schéma électrique, Diagram, Schaltplan, Esquema de conexiones.

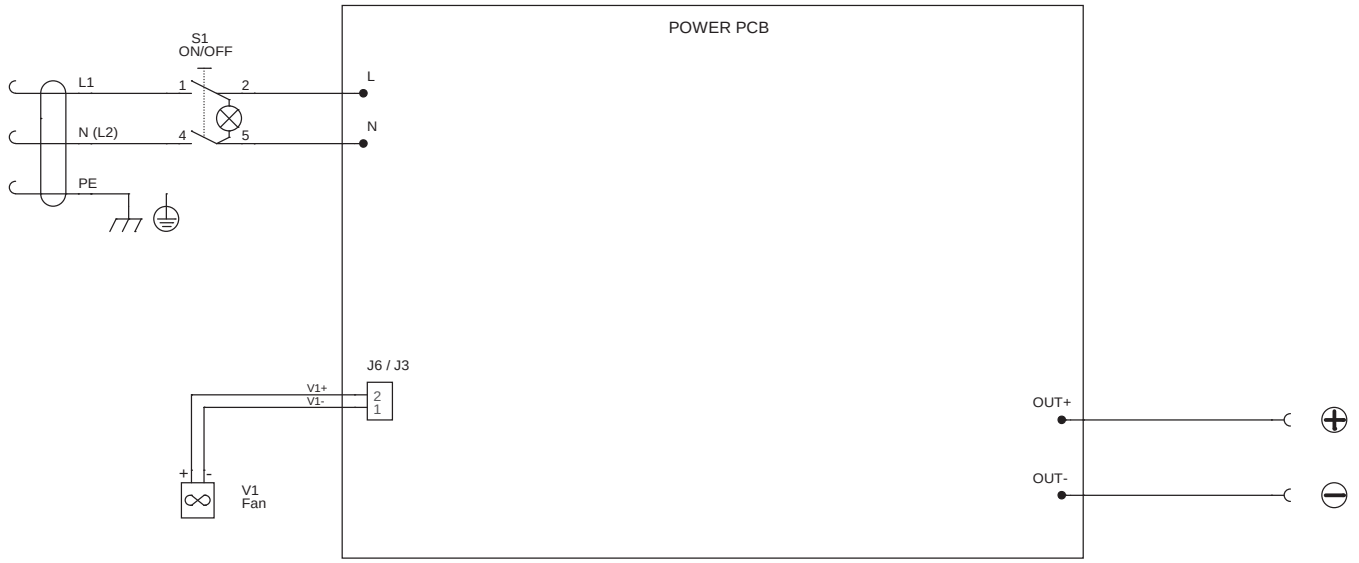

ELENCO PEZZI DI RICAMBIO
LISTE PIECES DETACHEES
SPARE PARTS LIST
ERSATZTEILLISTE
PIEZAS DE REPUESTO

INFINITY 228 CE

ELEMENTS LINE

TELWIN

Esploso macchina, Dessin appareil, Machine drawing, Explosions Zeichnung des Geräts, Diseño seccionado maquina.



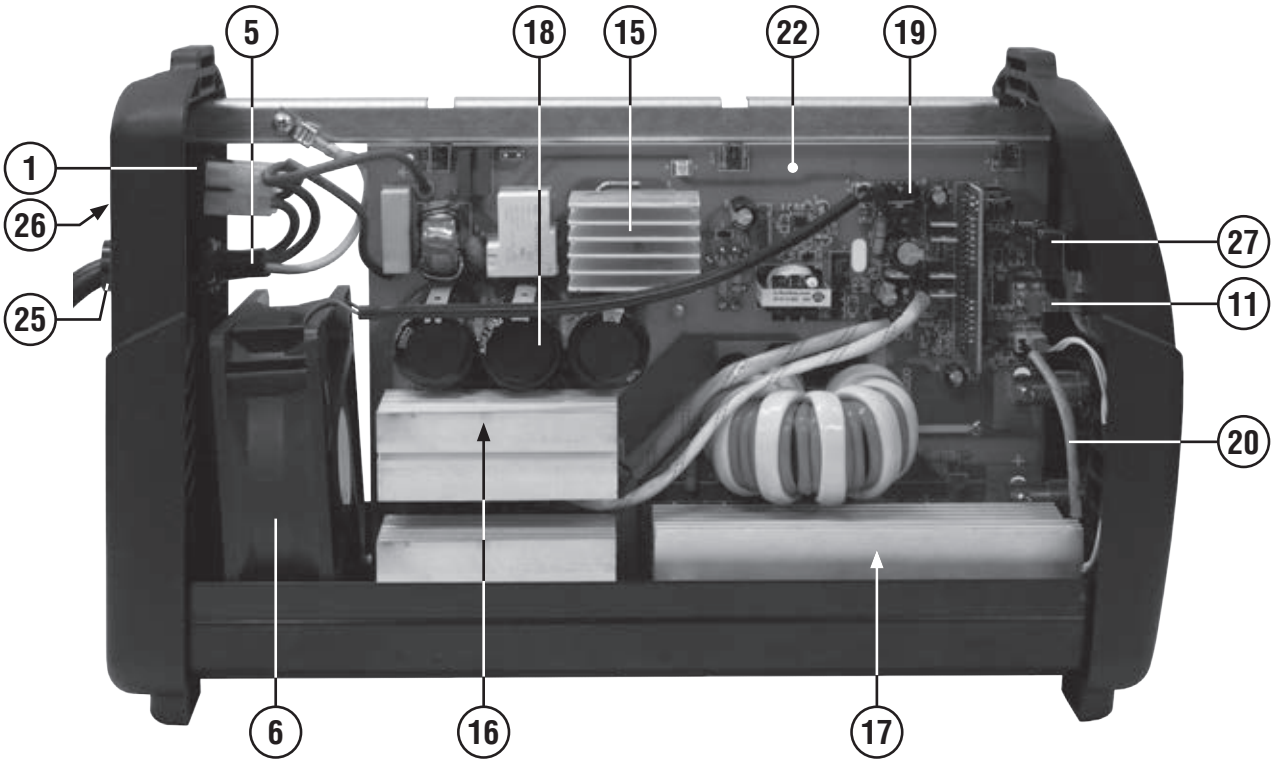

REF.	ELENCO PEZZI DI RICAMBIO PIECES DETACHEES SPARE PARTS LIST ERSATZTEILLISTE PIEZAS DE REPUESTO	CODICE CODE KODE
1	Interruttore Interrupteur Switch Schalter Interruptor	121248
2	Manopola Poignee Knob Griff Manija	121395
3	Cavo tw05v-a 1x025 02.00m spina atlas Cable tw05v-a 1x025 02.00m fiche atlas Cable tw05v-a 1x025 02.00m plug atlas Kabel tw05v-a 1x025 02.00m stecker atlas Cable tw05v-a 1x025 02.00m enchufe atlas	125033
4	Cavo Cable Cable Kabel Cable	124887
5	Cavo alim. 3g04.00 2.00 M Cable alim. 3g04.00 2.00 M Mains cable 3g04.00 2.00 M Netzkabel 3g04.00 2.00 M Cable alim. 3g04.00 2.00 M	132345
6	Ventilatore Ventilateur Fan Ventilator Ventilador	152290
7	Frontale Partie frontal Front panel Gerätefront Frontal	321278
8	Retro Partie arriere Back panel Rückseite Trasera	321377
9	Fibbia per cinghia Boucle pour courroie Belt buckle Gurtschnalle Hebilla para correa	322065
10	Cinghia Courroie Belt Gurt Correa	322408
11	Guida luce Guide Guide Führung Guia	322898
12	Toledo 250 pinza di massa 250a Toledo 250 pince de masse 250a Toledo 250 work clamp 250a Toledo 250 masseklemme 250a Toledo 250 pinza de masa 250a	712030

REF.	ELENCO PEZZI DI RICAMBIO PIECES DETACHEES SPARE PARTS LIST ERSATZTEILLISTE PIEZAS DE REPUESTO	CODICE CODE KODE
13	Spina atlas 50mmq Fiche atlas 50mmq Atlas plug 50mmq Atlas stecker 50mmq Enchufe atlas 50mmq	712040
14	Dallas 300 pinza portaelettrodi 300a Dallas 300 pince porte-electrodes 300a Dallas 300 electrode holder 300a Dallas 300 elektrodenhalter 300a Dallas 300 pinza portaelectrodos 300a	712260
15	Kit ponte monofase Kit pont monophase Single phase bridge kit Einfasige brücke kit Kit puente monofasico	981581
16	Kit igbt + diodi Kit igbt + diodes Kit igbt + diodes Kit igbt + dioden Kit igbt + diodos	981582
17	Kit diodi Kit diodes Diode kit Diode kit Kit diodo	981583
18	Kit condensatore snap-in Kit condensateur snap-in Condenser kit snap-in Kondensator kit snap-in Kit condensator snap-in	981584
19	Kit mosfet flyback Kit mosfet flyback Mosfet flyback kit Mosfet flyback kit Kit mosfet flyback	981585
20	Kit cablaggio ntc Kit cable ntc Ntc cable kit Ntc kabel kit Kit cable ntc	981586
21	Kit prese atlas 50mmq Kit prises atlas 50mmq Atlas sockets kit 50mmq Atlas steckdose kit 50mmq Kit enchufes atlas 50mmq	981878
22	Kit scheda potenza Kit carte puissance Power board kit Leistungskartekit Kit tarjeta potencia	981907
23	Kit mantello Kit capot Cover kit Deckel kit Kit panel de cobertura	981908
24	Kit fondo Kit chassis Bottom kit Bodenteil kit Kit fondo	981793

REF.	ELENCO PEZZI DI RICAMBIO PIECES DETACHEES SPARE PARTS LIST ERSATZTEILLISTE PIEZAS DE REPUESTO	CODICE CODE KODE
25	Kit pressacavo + ghiera Kit presse cable + embout Kit cable bushing + ring nut Kit kabelhalter + nutmutter Kit prensa cable + virola	990046
26	Copri interruttore Couvre interrupteur Switch cover Schalterdeckel Cubre interruptor	122353
27	Pot. Carb. 1k lin. 0.20w 10% Pot. Carb. 1k lin. 0.20w 10% Pot. Carb. 1k lin. 0.20w 10% Pot. Carb. 1k lin. 0.20w 10% Pot. Carb. 1k lin. 0.20w 10%	111487

Schema elettrico, Schéma électrique, Diagram, Schaltplan, Esquema de conexiones.

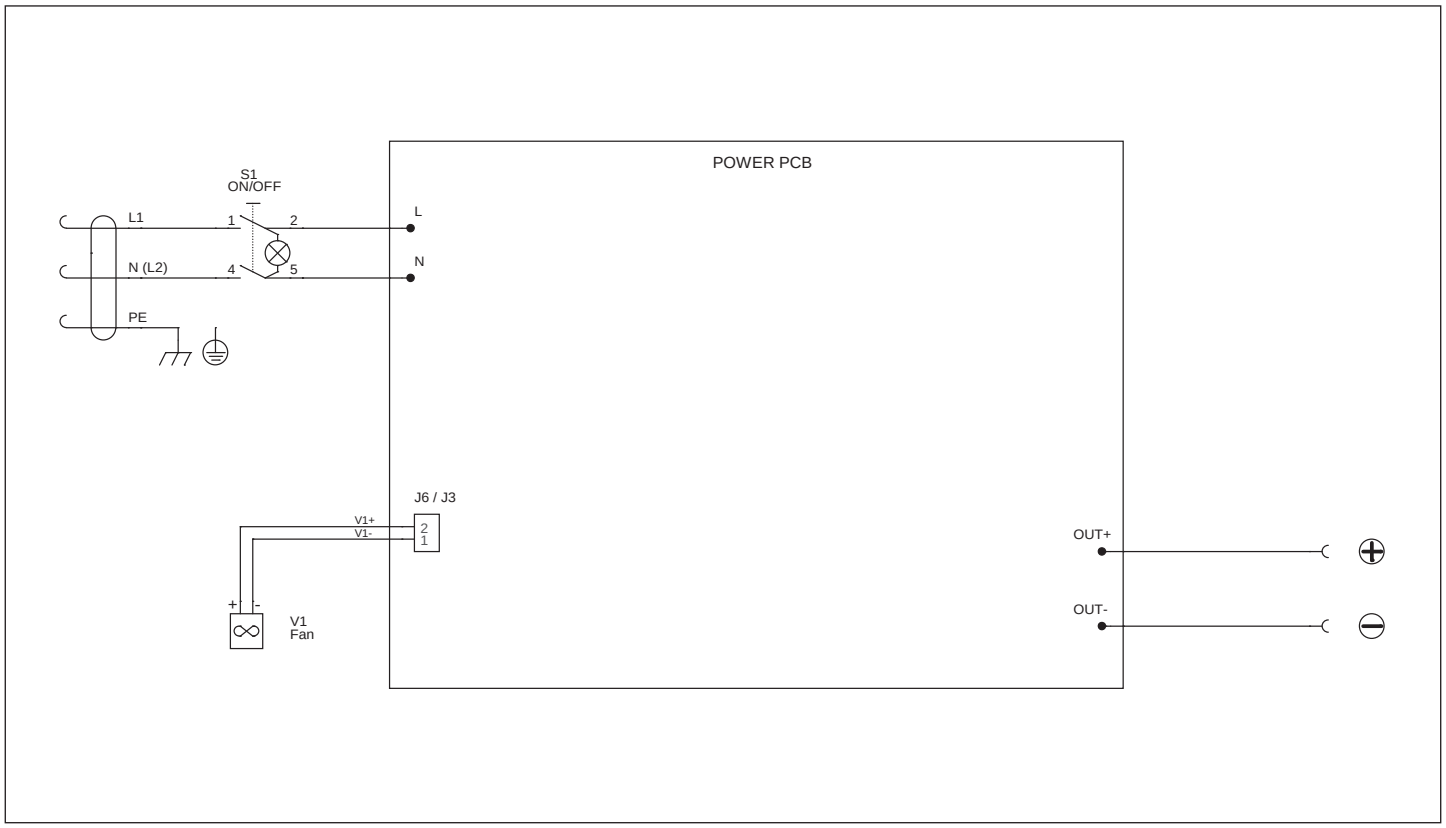

ELENCO PEZZI DI RICAMBIO
LISTE PIECES DETACHEES
SPARE PARTS LIST
ERSATZTEILLISTE
PIEZAS DE REPUESTO

ELEMENTS LINE

INFINITY TIG 225 DC-HF/LIFT VRD

TELWIN

Esploso macchina, Dessin appareil, Machine drawing, Explosions Zeichnung des Geräts, Diseño seccionado maquina.



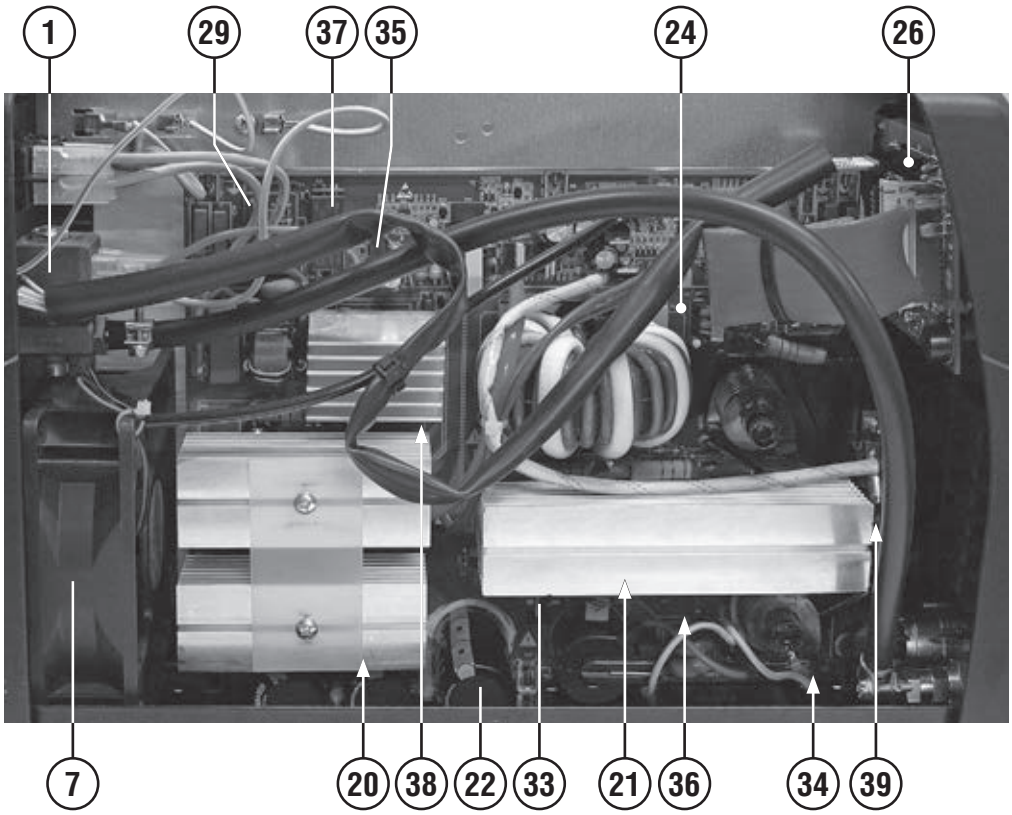

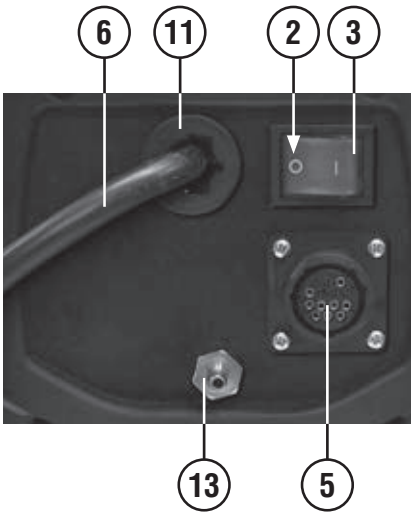

REF.	ELENCO PEZZI DI RICAMBIO PIECES DETACHEES SPARE PARTS LIST ERSATZTEILLISTE PIEZAS DE REPUESTO	CODICE CODE KODE
1	Elettrovalvola Electrovanne Electrovalve Elektroventil Electrovalvula	121800
2	Interruttore Interrupteur Switch Schalter Interruptor	121248
3	Copri interruttore Couvre interrupteur Switch cover Schalterdeckel Cubre interruptor	122353
4	Cablaggio pulsante torcia Cable poussoir torche Torch button cable Brennerknopfskabel Cable pulsador antorcha	124766
5	Cavo controllo Cable controle Control cable Kontrolkabel Cable control	125167
6	Cavo alimentazione Cable de reseau Mains cable Netzkabel Cable de alimentation	132157
7	Ventilatore Ventilateur Fan Ventilator Ventilador	152290
8	Frontale Partie frontal Front panel Gerätefront Frontal	321302
9	Retro Partie arriere Back panel Rückseite Trasera	321303
10	Fibbia per cinghia Boucle pour courroie Belt buckle Gurtschnalle Hebilla para correa	322065
11	Pressacavo Presse cable Cable bushing Kabelhalter Prensa cable	322112
12	Cinghia Courroie Belt Gurt Correa	322408
13	Raccordo Raccord Pipe fitting Anschluss Empalme	602376
14	Spina atlas 50mmq Fiche atlas 50mmq Atlas plug 50mmq Atlas stecker 50mmq Enchufe atlas 50mmq	712040
15	Toledo 300 pinza di massa 300a Toledo 300 borne de masse 300a Toledo 300 work clamp 300a Toledo 300 masseklemme 300a Toledo 300 borne de masa 300a	712231
16	Cavo 25mmq 3m-pinza massa-atlas 50mmq Cable 25mmq 3m-pince masse-atlas 50mmq Cable 25mmq 3m-work clamp-atlas 50mmq Kabel 25mmq 3m-massezange-atlas 50mmq Cable 25mmq 3m-pinca masa-atlas 50mmq	713192
17	St26 torcia tig ax50 4m St26 torche tig ax50 4m St26 tig torch ax50 4m St26 wig brenner ax50 4m St26 antorcha tig ax50 4m	742614
18	Kit manopola encoder Kit poignee encoder Encoder knob kit Encodergriff kit Kit manija encoder	980520
20	Kit igbt + diodi Kit igbt + diodes Kit igbt + diodes Kit igbt + dioden Kit igbt + diodos	981588
21	Kit diodi Kit diodes Diode kit Diode kit Kit diodo	981583
22	Kit condensatore snap-in Kit condensateur snap-in Condenser kit snap-in Kondensator kit snap-in Kit condensator snap-in	981584
23	Kit prese atlas 50mmq Kit prises atlas 50mmq Atlas sockets kit 50mmq Atlas steckdose kit 50mmq Kit enchufes atlas 50mmq	981878
24	Kit scheda potenza Kit carte puissance Power board kit Leistungskartekit Kit tarjeta potencia	982084
25	Kit mantello Kit capot Cover kit Deckel kit Kit panel de cobertura	982085
26	Kit scheda pannello Kit platine frontal Front panel card kit Gerätefrontskarte kit Kit tarjeta frontal	982086
27	Kit fondo Kit chassis Bottom kit Bodenteil kit Kit fondo	982087
28	Kit display Kit display Kit display Kit display Kit display	982088
29	Rele' 24vdc 40ma 250v 30a 1no Relais 24vdc 40ma 250v 30a 1no Relais 24vdc 40ma 250v 30a 1no Relais 24vdc 40ma 250v 30a 1no Relais 24vdc 40ma 250v 30a 1no	111406
33	Mosfet Mosfet Mosfet Mosfet Mosfet	111550
34	Scaricatore a gas 5000v Dechargeur de gaz 5000v Gas discharger 5000v Gas entladung 5000v Descargador de gas 5000v	111555
35	Mosfet Mosfet Mosfet Mosfet Mosfet	111572
36	Resistenza Resistance Resistance Wiederstand Resistencia	111580
37	Rele' 24vdc 17ma 250v 16a 1no Relais 24vdc 17ma 250v 16a 1no Relais 24vdc 17ma 250v 16a 1no Relais 24vdc 17ma 250v 16a 1no Conectador 24vdc 17ma 250v 16a 1no	116738
38	Res. Met. 10r 2w 5% fuse Res. Met. 10r 2w 5% fuse Res. Met. 10r 2w 5% fuse Res. Met. 10r 2w 5% fuse Res. Met. 10r 2w 5% fuse	116962
39	Termostato Thermostat Thermostat Thermostat Termostato	121748

Schema elettrico, Schéma électrique, Diagram, Schaltplan, Esquema de conexiones.

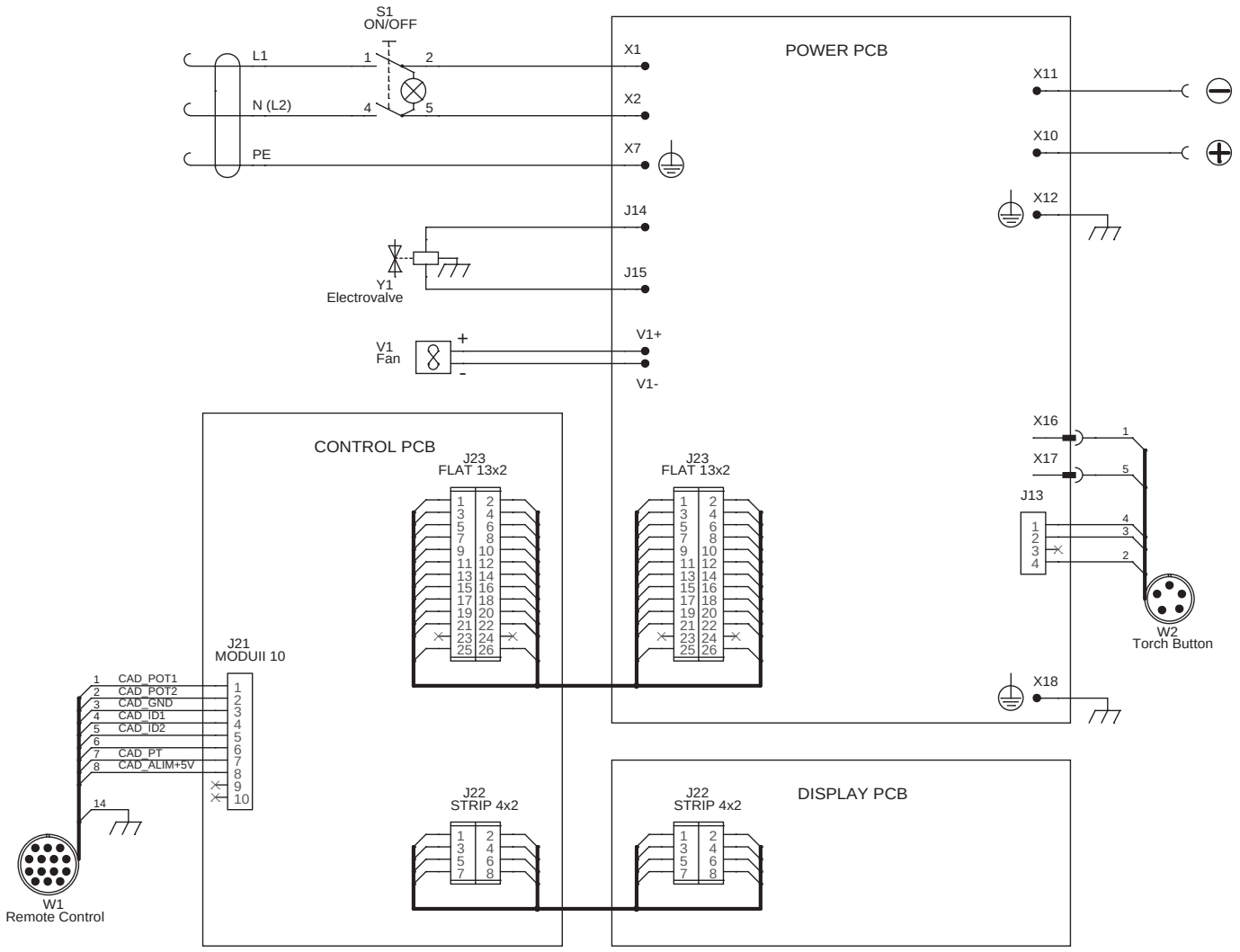

Esploso torcia, Dessin torche, Torch drawing, Schlauchpaket - Explosionszeichnung, Diseño seccionado antorcha.

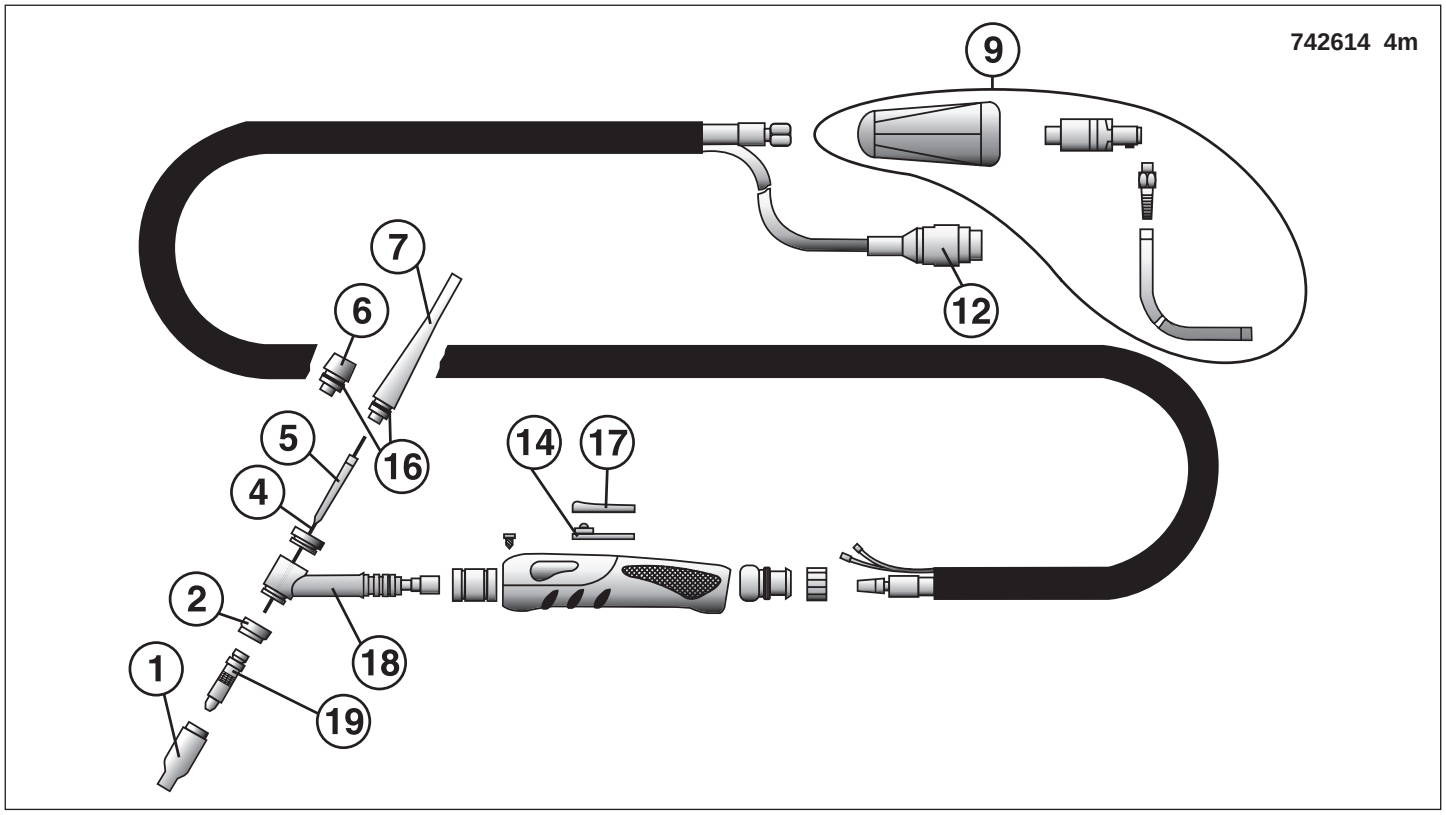

REF.	ELENCO PEZZI RICAMBIO TORCIA LISTE PIECES DETACHEES TORCHE SPARE PARTS LIST TORCH ERSATZTEILLISTE SCLAUCHPAKET PIEZAS DE REPUESTO ANTORCHA	CODICE CODE KODE
1	Kit 10 ugelli ceramici nr.10 Kit 10 buses ceramiques nr.10 Kit 10 ceramic nozzles nr.10 Kit 10 keramikdüsen nr.10 Kit 10 inyectores ceramicos nr.10	802248
1	Kit 10 ugelli ceramici nr.8 Kit 10 buses ceramiques nr.8 Kit 10 ceramic nozzles nr.8 Kit 10 keramikdüsen nr.8 Kit 10 inyectores ceramicos nr.8	802247
1	Kit 10 ugelli ceramici nr.7 Kit 10 buses ceramiques nr.7 Kit 10 ceramic nozzles nr.7 Kit 10 keramikdüsen nr.7 Kit 10 inyectores ceramicos nr.7	802246
1	Kit 10 ugelli ceramici nr.6 Kit 10 buses ceramiques nr.6 Kit 10 ceramic nozzles nr.6 Kit 10 keramikdüsen nr.6 Kit 10 inyectores ceramicos nr.6	802245
1	Kit 10 ugelli ceramici nr.4 Kit 10 buses ceramiques nr.4 Kit 10 ceramic nozzles nr.4 Kit 10 keramikdüsen nr.4 Kit 10 inyectores ceramicos nr.4	802244
2	Isolante Isolant Insulator Isolator Aislador	722248
4	Kit 10 elettr.Tungsteno puro d. 4 Mm Kit 10 electr.Tungstene pur d. 4 Mm Kit 10 pure tungsten electr. D. 4 Mm Kit 10 reinwolfram elektr. D. 4 Mm Kit 10 electr.Tungsteno puro d. 4 Mm	802238
4	Kit 10 elettr.Tungsteno puro d.3,2 Mm Kit 10 electr.Tungstene pur d.3,2 Mm Kit 10 pure tungsten electr. D.3,2 Mm Kit 10 reinwolfram elektr. D.3,2 Mm Kit 10 electr.Tungsteno puro d.3,2 Mm	802237
4	Kit 10 elettr.Tungsteno puro d.2,4 Mm Kit 10 electr.Tungstene pur d.2,4 Mm Kit 10 pure tungsten electr. D.2,4 Mm Kit 10 reinwolfram elektrm d.2,4 Mm Kit 10 electr.Tungsteno puro d.2,4 Mm	802236
4	Kit 10 elettr.Tungsteno puro d.1,6 Mm Kit 10 electr.Tungstene pur d.1,6 Mm Kit 10 pure tungsten electr. D.1,6 Mm Kit 10 reinwolfram elektr. D.1,6 Mm Kit 10 electr.Tungsteno puro d.1,6 Mm	802235
4	Kit 10 elettr.Tungsteno ceriato d.3,2 Mm Kit 10 electr.Tungstene-cerium d.3,2 Mm Kit 10 cerium-tungsten electr. D.3,2 Mm Kit 10 wolfram-zerium elektr. D.3,2 Mm Kit 10 electr.Tungsteno cerio d.3,2 Mm	802233
4	Kit 10 elettr.Tungsteno ceriato d.2,4 Mm Kit 10 electr.Tungstene-cerium d.2,4 Mm Kit 10 cerium-tungsten electr. D.2,4 Mm Kit 10 wolfram-zerium elektr. D.2,4 Mm Kit 10 electr.Tungsteno cerio d.2,4 Mm	802232

REF.	ELENCO PEZZI RICAMBIO TORCIA LISTE PIECES DETACHEES TORCHE SPARE PARTS LIST TORCH ERSATZTEILLISTE SCLAUCHPAKET PIEZAS DE REPUESTO ANTORCHA	CODICE CODE KODE
4	Kit 10 elettr.Tungsteno ceriato d.1,6 Mm Kit 10 electr.Tungstene-cerium d.1,6 Mm Kit 10 cerium-tungsten electr. D.1,6 Mm Kit 10 wolfram-zerium elektr. D.1,6 Mm Kit 10 electr.Tungsteno cerio d.1,6 Mm	802222
4	Kit 10 elettr.Tungsteno ceriato d.1 Mm Kit 10 electr.Tungstene-cerium d.1 Mm Kit 10 cerium-tungsten electr. D.1 Mm Kit 10 wolfram-zerium elektr. D.1 Mm Kit 10 electr.Tungsteno cerio d.1 Mm	802220
5	Kit 3 pinze serra elettrodo d.1,0 Mm Kit 3 pinces porte-electrode d.1,0 Mm Kit 3 electrode holder clamps d.1,0 Mm Kit 3 elektrodenhalterzangen d.1,0 Mm Kit 3 pinzas porta electrodo d.1,0 Mm	802239
5	Kit 3 pinze serra elettrodo d.1,6 Mm Kit 3 pinces porte-electrode d.1,6 Mm Kit 3 electrode holder clamps d.1,6 Mm Kit 3 elektrodenhalterzangen d.1,6 Mm Kit 3 pinzas porta electrodo d.1,6 Mm	802240
5	Kit 3 pinze serra elettrodo d.2,4 Mm Kit 3 pinces porte-electrode d.2,4 Mm Kit 3 electrode holder clamps d.2,4 Mm Kit 3 elektrodenhalterzangen d.2,4 Mm Kit 3 pinzas porta electrodo d.2,4 Mm	802241
5	Kit 3 pinze serra elettrodo d.3,2 Mm Kit 3 pinces porte-electrode d.3,2 Mm Kit 3 electrode holder clamps d.3,2 Mm Kit 3 elektrodenhalterzangen d.3,2 Mm Kit 3 pinzas porta electrodo d.3,2 Mm	802242
5	Kit 3 pinze serra elettrodo d.4 Mm Kit 3 pinces porte-electrode d.4 Mm Kit 3 electrode holder clamps d.4 Mm Kit 3 elektrodenhalterzangen d.4 Mm Kit 3 pinzas porta electrodo d.4 Mm	802243
6	Cappuccio corto st17-26 Capuchon petit st17-26 Short cap st17-26 Kurze kappe st17-26 Capuchon corto st17-26	722192
7	Cappuccio lungo st17-26 Capuchon long Long cap Lange kappe Capuchon largo	722193
9	Kit attacco atlas 50mmq Kit embout atlas 50mmq Atlas 50mmq connection kit Atlas 50mmq anschluss kit Kit conexion atlas 50mmq	981443
12	Spina 5p Fiche 5p 5p plug 5p stecker Espina 5p	742599
14	Contatto pulsante Contact poussoir Pushbotton contact Druckknopfkontakt Contacto pulsador	452089

REF.	ELENCO PEZZI RICAMBIO TORCIA LISTE PIECES DETACHEES TORCHE SPARE PARTS LIST TORCH ERSATZTEILLISTE SCLAUCHPAKET PIEZAS DE REPUESTO ANTORCHA	CODICE CODE KODE
16	Anello or Bague or Or ring Or ring Anillo or	722061
17	Pulsante Poussoir Pushbotton Druckknopf Pulsador	742042
18	Corpo torcia Corps torche Torch body Schlauchpaketteil Cuerpo de antorcha	722944
19	Kit 3 diffusori elettrodo d.1 Mm Kit 3 diffuseurs electrode d.1 Mm Kit 3 electrode diffusers d.1 Mm Kit 3 gasverteiler d.1 Mm Kit 3 difusores electrodo d.1 Mm	802249
19	Kit 3 diffusori elettrodo d.1,6 Mm Kit 3 diffuseurs electrode d.1,6 Mm Kit 3 electrode diffusers d.1,6 Mm Kit 3 gasverteiler d.1,6 Mm Kit 3 difusores electrodo d.1,6 Mm	802250
19	Kit 3 diffusori elettrodo d.2,4 Mm Kit 3 diffuseurs electrode d.2,4 Mm Kit 3 electrode diffusers d.2,4 Mm Kit 3 gasverteiler d.2,4 Mm Kit 3 difusores electrodo d.2,4 Mm	802251
19	Kit 3 diffusori elettrodo d.3,2 Mm Kit 3 diffuseurs electrode d.3,2 Mm Kit 3 electrode diffusers d.3,2 Mm Kit 3 gasverteiler d.3,2 Mm Kit 3 difusores electrodo d.3,2 Mm	802252
19	Kit 3 diffusori elettrodo d.4 Mm Kit 3 diffuseurs electrode d.4 Mm Kit 3 electrode diffusers d.4 Mm Kit 3 gasverteiler d.4 Mm Kit 3 difusores electrodo d.4 Mm	802253

ELENCO PEZZI DI RICAMBIO
LISTE PIECES DETACHEES
SPARE PARTS LIST
ERSATZTEILLISTE
PIEZAS DE REPUESTO

BIMAX 120 AUTOMATIC

ELEMENTS LINE

TELWIN

Esploso macchina, Dessin appareil, Machine drawing, Explosions Zeichnung des Geräts, Diseño seccionado maquina.



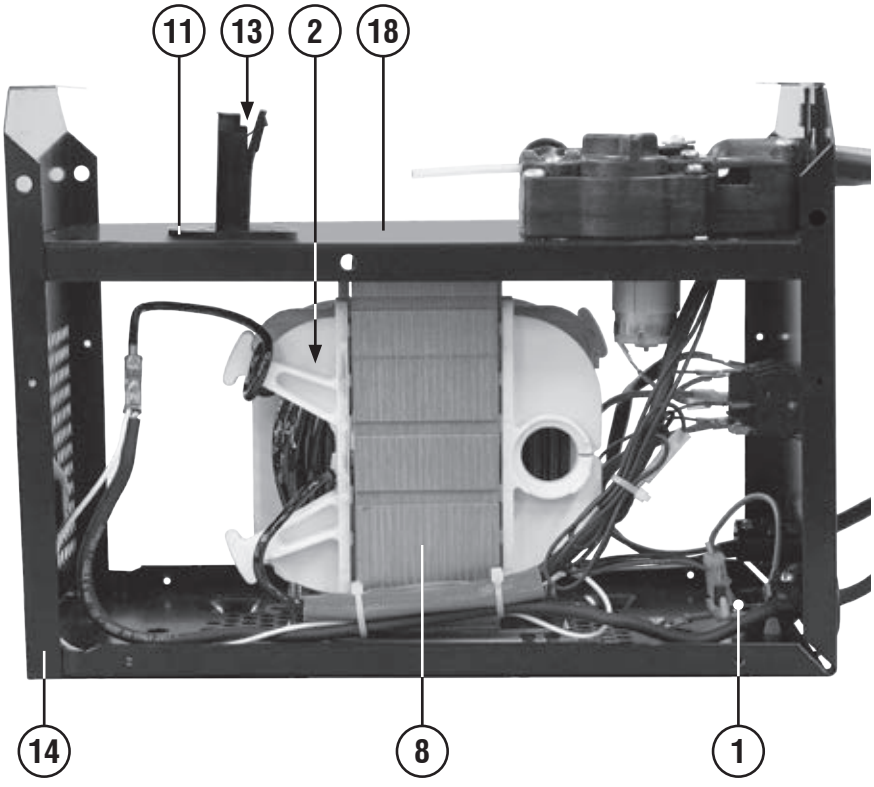

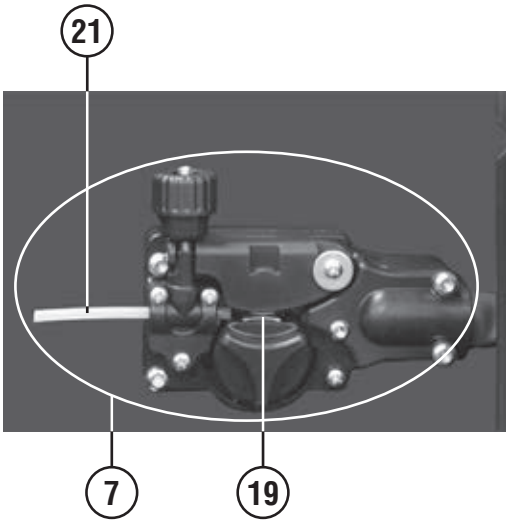

REF.	ELENCO PEZZI DI RICAMBIO PIECES DETACHEES SPARE PARTS LIST ERSATZTEILLISTE PIEZAS DE REPUESTO	CODICE CODE KODE
1	Kit scheda mog/live automatic+cablaggio Kit fiche mog/live automatic + cable Kit pcb mog/live automatic + cable Kit karte mog/live automatic + kabel Kit tarjeta mog/live automatic + cable	982117
2	Termostato Thermostat Thermostat Thermostat Termostato	121715
3	Deviatore Gareur Switch Schalter Interruptor	122400
4	Interruttore Interrupteur Switch Schalter Interruptor	122752
5	Cavo 6mmq 1,8 m pinza di massa Cable 6mmq 1,8 m pince de masse Cable 6mmq 1,8 m and work clamp Kabel 6mmq 1,8 m massezange Cable 6mmq 1,8 m pinca de masa	713035
6	Cavo alim. 3g1.5 2m spina schuko Cable alim. 3g1.5 2m fiche schuko Mains cable 3g1.5 2m schuko plug Netzkabel 3g1.5 2m schuko stecker Cable alim. 3g1.5 2m espina schuko	132310
7	Kit motore Kit moteur Motor kit Motorkit Kit motor	981828
8	Trasformatore Trasformateur Transformer Trafo Transformador	164937
9	Maniglia Poignee Handle Handgriff Manija	312007
10	Pressacavo Presse cable Cable bushing Kabelhalter Prensa cable	322112
11	Aspo bobina filo Support bobine Spindle Dorn Mandril	322115
12	Tappo Bouchon Cap Stopfen Tapon	322473
13	Molla per aspo Ressort support bobine Spindle spring Dornfeder Muelle mandril	452017
14	Retro Partie arriere Back panel Rückseite Trasera	644020
15	Frontale Partie frontal Front panel Gerätefront Frontal	642752
16	Mantello Capot Cover Deckel Panel de cobertura	617022
17	Fianco Partie lateral Side panel Seitenblech Flanco	617023
18	Diaframma Diaphragme Diaphragm Diaphragma Diafragma	644118
19	Rullino traino 1r 0,6fe-0,8/0,9fl “c” Galet 1r 0,6fe-0,8/0,9fl “c” Feed roll 1r 0,6fe-0,8/0,9fl “c” Vorschubrolle 1r 0,6fe-0,8/0,9fl “c” Roldana 1r 0,6fe-0,8/0,9fl “c”	722529
20	Tw160 torcia mig 2m no gas Tw160 torche mig 2m no gas Tw160 mig torch 2m no gas Tw160 mig brenner 2m no gas Tw160 antorcha mig 2m no gas	742769
21	Kit guaina entrata motore Kit gaine entree moteur Gas hose kit Drahtfuehrungsseelekit Kit vaina guiadera alambre	990097
22	Colorado 60b pinza di massa 60a Colorado 60b pince de masse 60a Colorado 60b work clamp 60a Colorado 60b masseklemme 60a Colorado 60b pinza de masa 60a	712361
23	Fermaglio Clip Clip Befestigungsstopfen Clip	322242

Schema elettrico, Schéma électrique, Diagram, Schaltplan, Esquema de conexiones.

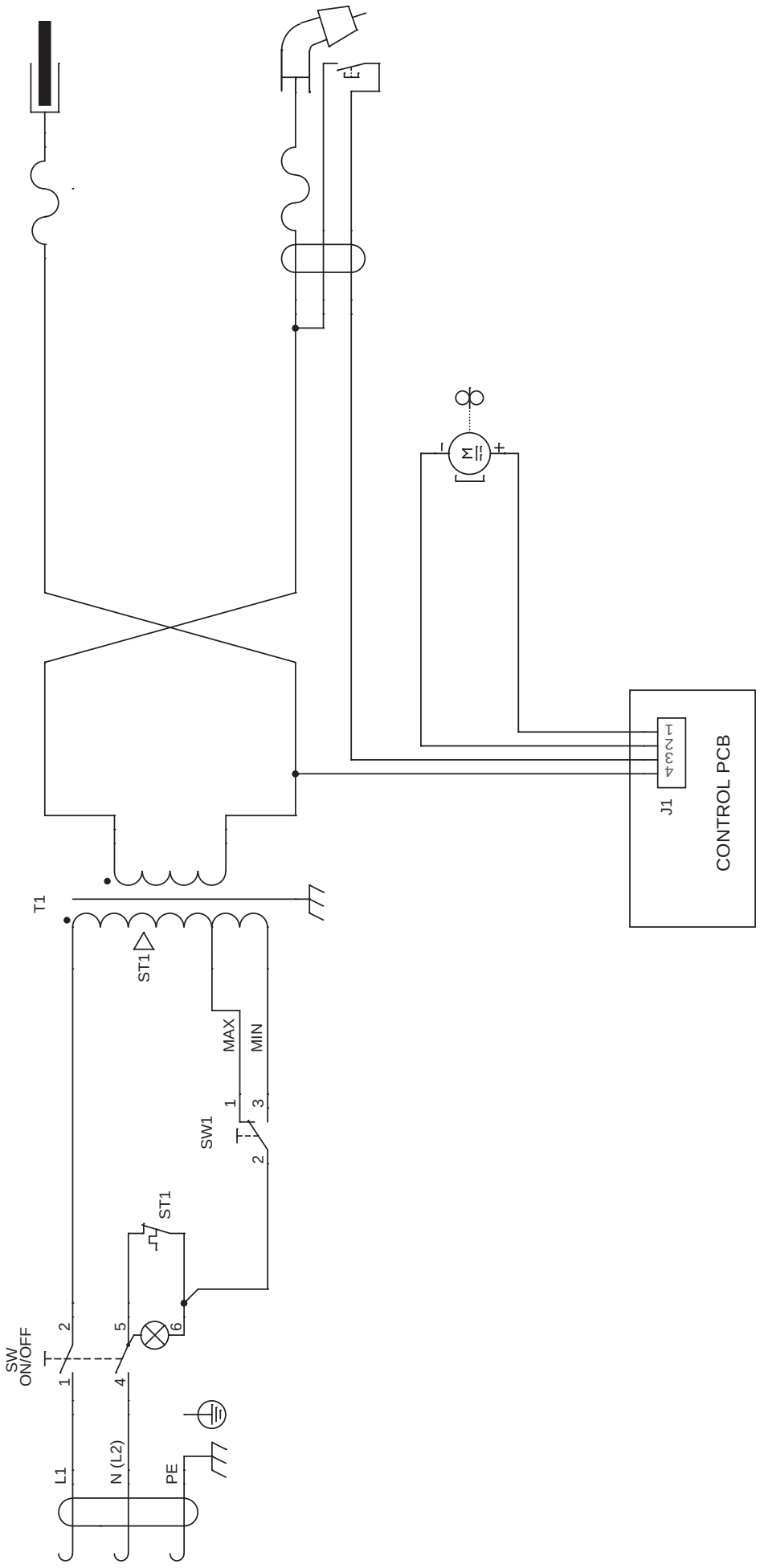

Esploso torcia, Dessin torche, Torch drawing, Schlauchpaket - Explosionszeichnung, Diseño seccionado antorcha.

742769

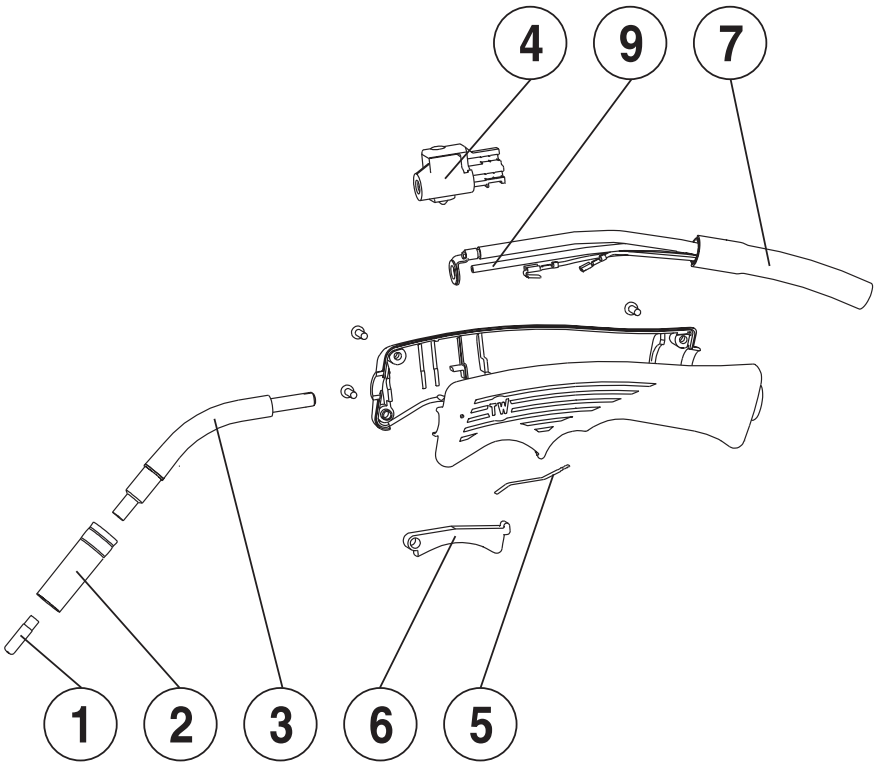

REF.	ELENCO PEZZI RICAMBIO TORCIA LISTE PIECES DETACHEES TORCHE SPARE PARTS LIST TORCH ERSATZTEILLISTE SCLAUCHPAKET PIEZAS DE REPUESTO ANTORCHA	CODICE CODE KODE
1	Tubetto di contatto d. 0,8 Mm al/flux Tube contact d. 0,8 Mm al/flux Contact tip d. 0,8 Mm al/flux Kontaktdüse d. 0,8 Mm al/flux Tubito de contacto d. 0,8 Mm al/flux	722556
2	Ugello cilindrico tw160–180,mt15,sp.Gun Bec conique tw160–180,mt15,sp.Gun Cylindrical nozzle tw160–180,mt15,sp.Gun Zylindrische düse tw160–180,mt15,sp.Gun Inyect. Cilindrico tw160–180,mt15,sp.Gun	722149
3	Lancia con diffusore tw 160 - 180 Lance avec diffuseur tw 160 - 180 Swan neck with diffuser tw 160 - 180 Brennerhals mit diffusor tw 160 - 180 Encorvado con diffusor tw 160 - 180	722078
4	Valvola Vanne Valve Ventil Valvula	990721
5	Molla per contatto torcia mig Ressort de contacte torche mig Contact spring for mig torch Kontaktfeder fuer mig brenner Muelle de contacto para antorcha mig	452097
6	Pulsante Poussoir Pushbutton Druckknopf Pulsador	322295
7	Fascio cavi 10mmq Faisceau des cables 10mmq Cables set 10mmq Kabelnsatzt 10mmq Haz de cables 10mmq	990722
9	Guaina d.0,6-0,8mm 2m fe/inox/flux Gaine d.0,6-0,8 Mm 2m fe/inox/flux Guide hose d.0,6-0,8mm 2m fe/inox/flux Drahtführung d.0,6-0,8mm 2m fe/inox/flux Vaina d. 0,6-0,8mm 2m fe/inox/flux	722077

REF.	ELENCO PEZZI RICAMBIO TORCIA LISTE PIECES DETACHEES TORCHE SPARE PARTS LIST TORCH ERSATZTEILLISTE SCLAUCHPAKET PIEZAS DE REPUESTO ANTORCHA	CODICE CODE KODE

REF.	ELENCO PEZZI RICAMBIO TORCIA LISTE PIECES DETACHEES TORCHE SPARE PARTS LIST TORCH ERSATZTEILLISTE SCLAUCHPAKET PIEZAS DE REPUESTO ANTORCHA	CODICE CODE KODE

ELENCO PEZZI DI RICAMBIO
LISTE PIECES DETACHEES
SPARE PARTS LIST
ERSATZTEILLISTE
PIEZAS DE REPUESTO

BIMAX 140 TURBO

ELEMENTS LINE

TELWIN

Esploso macchina, Dessin appareil, Machine drawing, Explosions Zeichnung des Geräts, Diseño seccionado maquina.

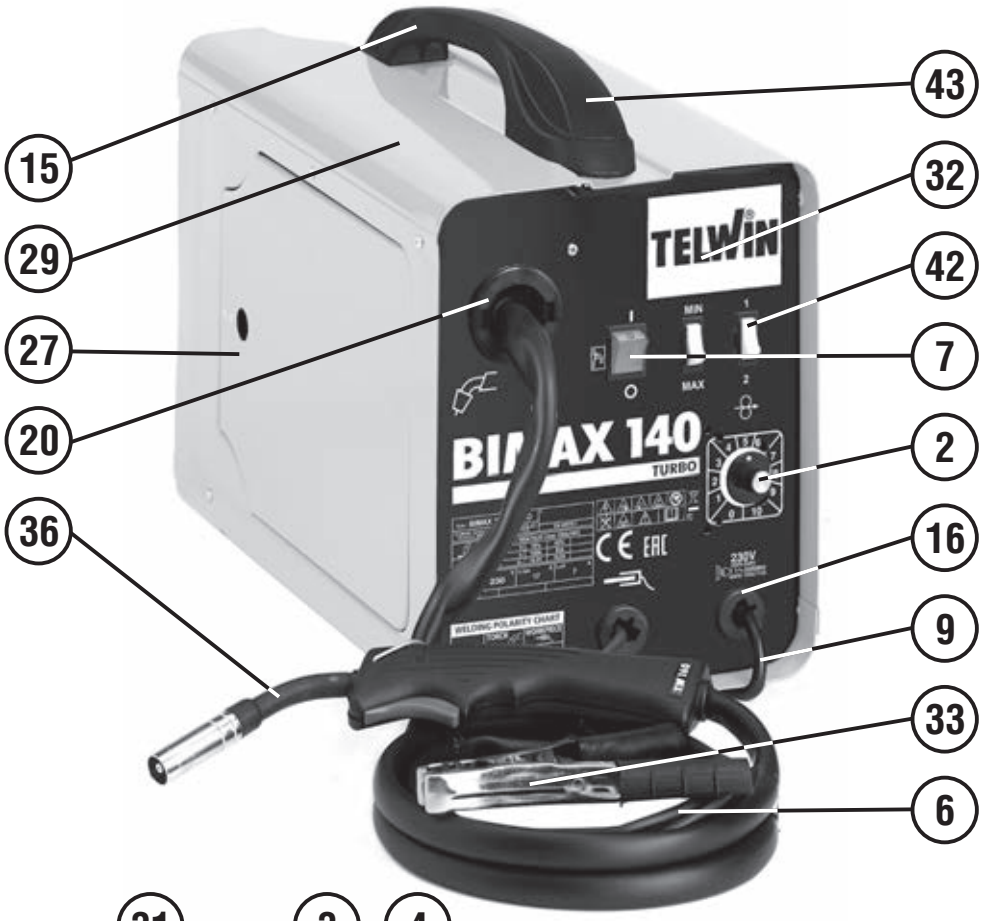

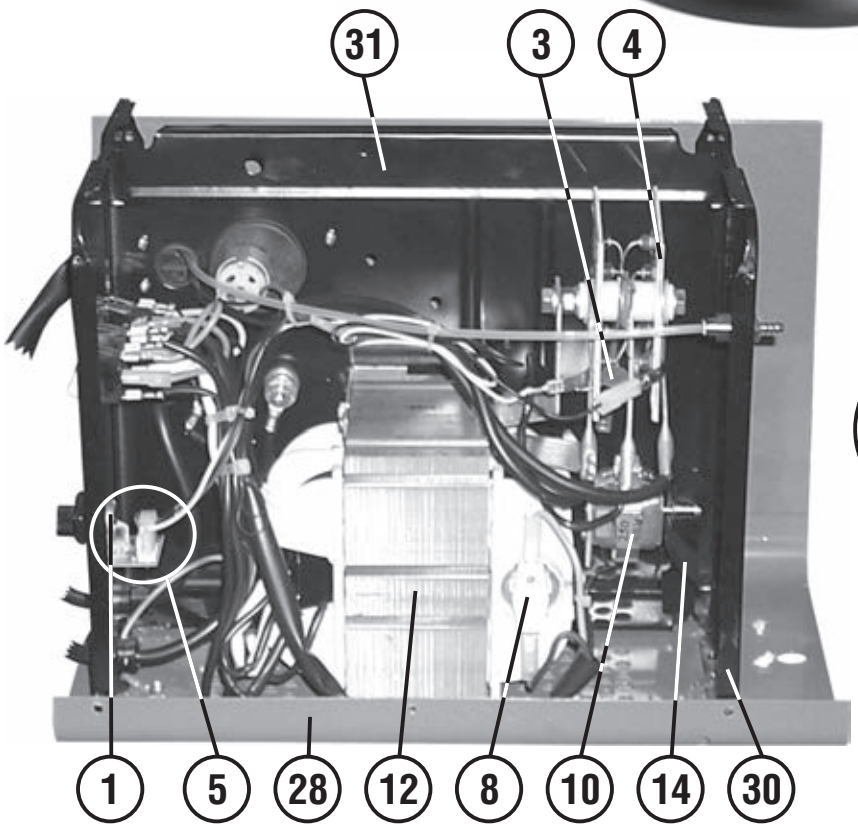

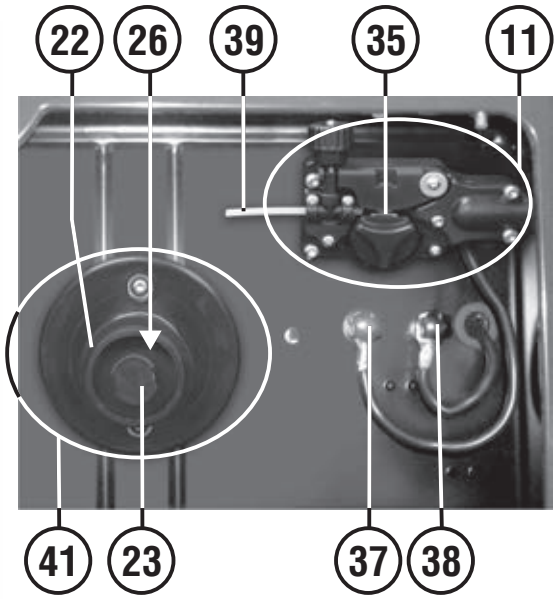

REF.	ELENCO PEZZI DI RICAMBIO PIECES DETACHEES SPARE PARTS LIST ERSATZTEILLISTE PIEZAS DE REPUESTO	CODICE CODE KODE
1	Potenziometro Potentiometre Potentiometer Potentiometer Potenciometro	113533
2	Manopola Poignee Knob Griff Manija	121424
3	Protezione raddrizzatore Protection redresseur Rectifier protection Gleichrichterschutz Protector rectificador	112185
4	Kit raddrizzatore Kit redresseur Rectifier kit Kit gleichrichter Kit rectificador	990746
5	Kit scheda mog/live automatic+cablaggio Kit fiche mog/live automatic + cable Kit pcb mog/live automatic + cable Kit karte mog/live automatic + kabel Kit tarjeta mog/live automatic + cable	990178
6	Cavo 16 mmq 1,8 m Cable 16 mmq 1,8 m Cable 16 mmq 1,8 m Kabel 16 mmq 1,8 m Cable 16 mmq 1,8 m	124502
7	Interruttore Interrupteur Switch Schalter Interruptor	122752
8	Termostato Thermostat Thermostat Thermostat Termostato	121714
9	Cavo alim. 3g1.5 2m spina schuko Cable alim. 3g1.5 2m fiche schuko Mains cable 3g1.5 2m schuko plug Netzkabel 3g1.5 2m schuko stecker Cable alim. 3g1.5 2m espina schuko	132310
10	Motore ventilatore Moteur ventilateur Fan motor Ventilatormotor Motor ventilacion	152080
11	Kit motore Kit moteur Motor kit Motorkit Kit motor	981828
12	Trasformatore Transformateur Transformer Transformator Transformador	169167
14	Ventola Helice Fan blade Fluegelrad Aventador	312026
15	Maniglia Poignee Handle Handgriff Manija	322677
16	Pressacavo Presse cable Cable bushing Kabelhalter Prensa cable	322112
20	Ghiera Embout Ring nut Nutmutter Virola	322143
22	Ghiera per aspo Embout pour support bobine Reel ring nut Wicklernutmutter Virola por aspa	322173
23	Volantino per aspo Volant pour support bobine Reel handwheel Wicklerhandrad Volant por aspa	322174
26	Molla per aspo Ressort pour support bobine Reel spring Wickler feder Muelle por aspa	452065
27	Sportello Guichet Door Tür Portezuela	617024
28	Kit fondo Kit chassis Bottom kit Bodenteil kit Kit fondo	981820

REF.	ELENCO PEZZI DI RICAMBIO PIECES DETACHEES SPARE PARTS LIST ERSATZTEILLISTE PIEZAS DE REPUESTO	CODICE CODE KODE
29	Kit mantello Kit capot Cover kit Deckelkit Kit panel de cobertura	981819
30	Retro Partie derriere Back panel Rückseite Trasera	644229
31	Diaframma Diaphragme Diaphragm Diaphragma Diafragma	644734
32	Frontale Partie frontal Front panel Gerätefront Frontal	642530
33	Colorado 150b pinza di massa 150a Colorado 150b pince de masse 150a Colorado 150b work clamp 150a Colorado 150b masseklemme 150a Colorado 150b pinza de masa 150a	712001
35	Rullino traino 1r 0,6fe-0,8/0,9fl "c" Galet 1r 0,6fe-0,8/0,9fl "c" Feed roll 1r 0,6fe-0,8/0,9fl "c" Vorschubrolle 1r 0,6fe-0,8/0,9fl "c" Roldana 1r 0,6fe-0,8/0,9fl "c"	722529
36	Tw160 torcia mig 2m Tw160 torche mig 2m Tw160 mig torch 2m Tw160 mig brenner 2m Tw160 antorcha mig 2m	742402
37	Kit morsetto di carica rosso Kit borne de charge rouge Red charging clamp kit Rote anschlussklemme kit Kit borne de carga rojo	990072
38	Kit morsetto di carica nero Kit borne de charge noire Kit black charging clamp Kit schwarze ladungsklemme Kit borne de carga negro	990073
39	Kit guaina entrata motore Kit gaine entree moteur Gas hose kit Drahtfuehrungsseelekit Kit vaina guiadera alambre	990097
41	Kit aspo Kit support bobine Reel kit Wickler kit Kit aspa	990288
42	Deviatore Gareur Switch Schalter Interruptor	122400
43	Tappo per maniglia Bouchon pour poignee Cap for handle Stopfen fuer handgriff Tapon para manija	322681

REF.	ELENCO PEZZI DI RICAMBIO PIECES DETACHEES SPARE PARTS LIST ERSATZTEILLISTE PIEZAS DE REPUESTO	CODICE CODE KODE

Schema elettrico, Schéma électrique, Diagram, Schaltplan, Esquema de conexiones.

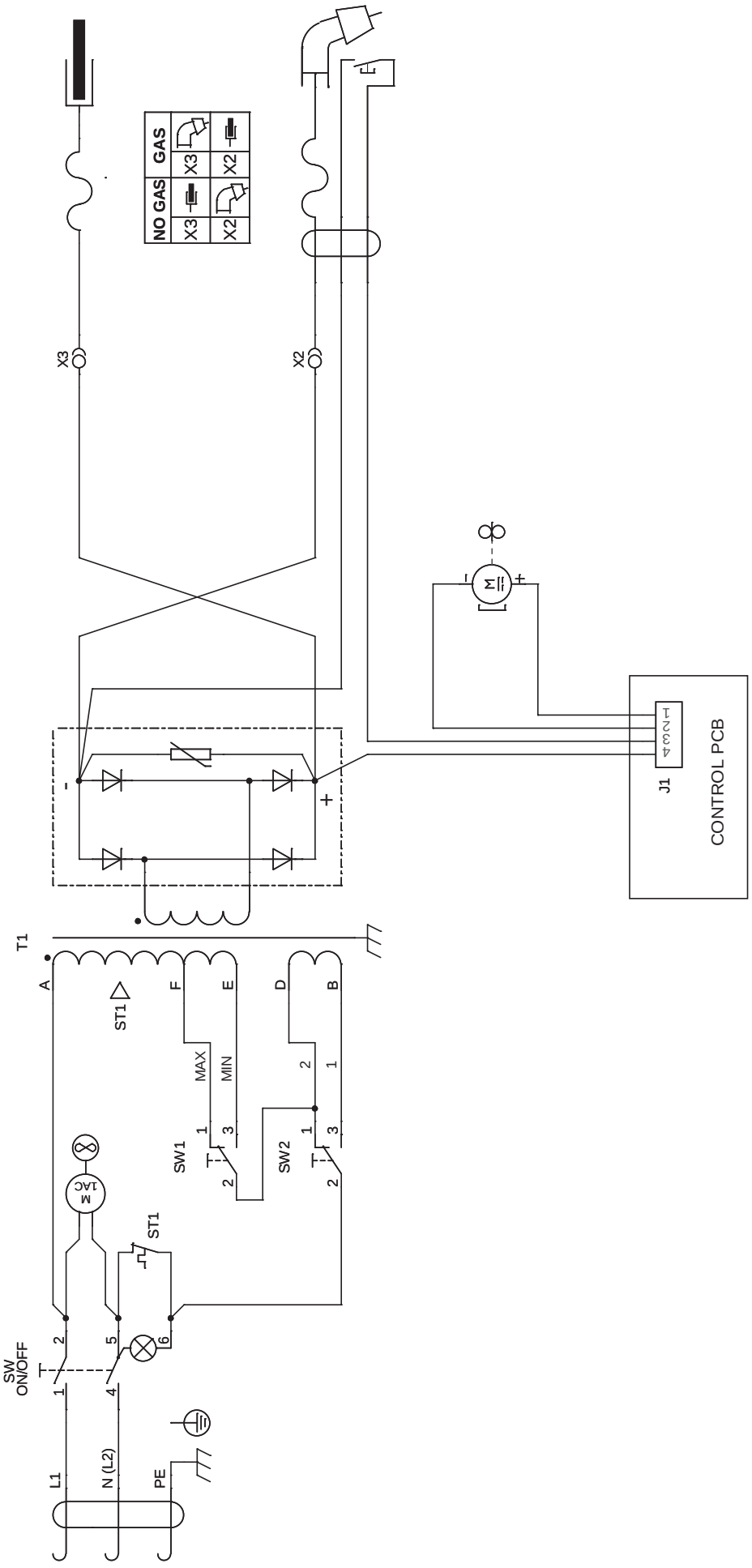

Esploso torcia, Dessin torche, Torch drawing, Schlauchpaket - Explosionszeichnung, Diseño seccionado antorcha.

742402

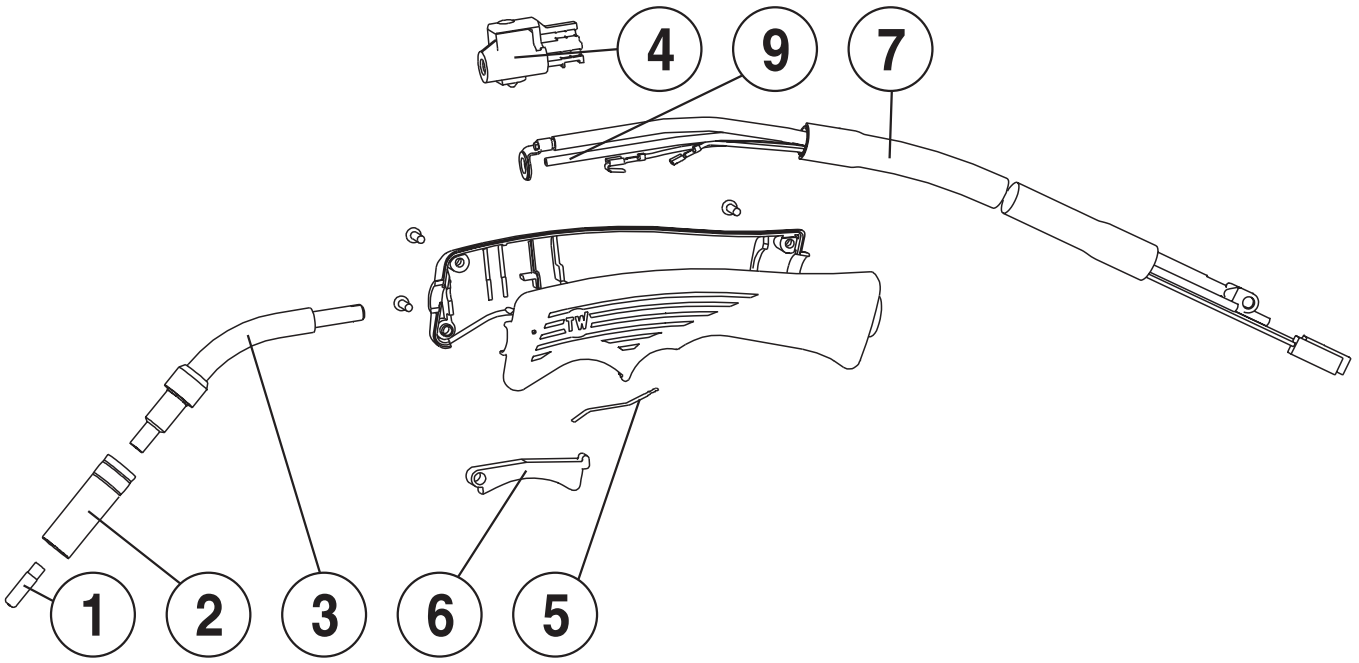

REF.	ELENCO PEZZI RICAMBIO TORCIA LISTE PIECES DETACHEES TORCHE SPARE PARTS LIST TORCH ERSATZTEILLISTE SCLAUCHPAKET PIEZAS DE REPUESTO ANTORCHA	CODICE CODE KODE
1	Tubetto di contatto d. 1 Mm al/flux m6 Tube contact d. 1 Mm al/flux m6 Contact tip d. 1 Mm al/flux m6 Kontaktdüse d. 1 Mm al/flux m6 Tubito de contacto d. 1 Mm al/flux m6	722552
2	Ugello cilindrico tw160–180,mt15,sp.Gun Bec conique tw160–180,mt15,sp.Gun Cylindrical nozzle tw160–180,mt15,sp.Gun Zylindrische düse tw160–180,mt15,sp.Gun Inyect. Cilindrico tw160–180,mt15,sp.Gun	722149
3	Lancia con diffusore tw 160 - 180 Lance avec diffuseur tw 160 - 180 Swan neck with diffuser tw 160 - 180 Brennerhals mit diffusor tw 160 - 180 Encorvado con diffusor tw 160 - 180	722078
4	Valvola Vanne Valve Ventil Valvula	990464
5	Molla per contatto torcia mig Ressort de contacte torche mig Contact spring for mig torch Kontaktfeder fuer mig brenner Muelle de contacto para antorcha mig	452097
6	Pulsante Poussoir Pushbutton Druckknopf Pulsador	322295
7	Kit fascio cavi 10mmq Kit faisceau cables 10mmq Kit cable set 10 mmq Kit kabelnset 10mmq Kit fajo cables 10mmq	990602
9	Guaina d.0,6-0,8mm 2m fe/inox/flux Gaine d.0,6-0,8 Mm 2m fe/inox/flux Guide hose d.0,6-0,8mm 2m fe/inox/flux Drahtführung d.0,6-0,8mm 2m fe/inox/flux Vaina d. 0,6-0,8mm 2m fe/inox/flux	722077

REF.	ELENCO PEZZI RICAMBIO TORCIA LISTE PIECES DETACHEES TORCHE SPARE PARTS LIST TORCH ERSATZTEILLISTE SCLAUCHPAKET PIEZAS DE REPUESTO ANTORCHA	CODICE CODE KODE

REF.	ELENCO PEZZI RICAMBIO TORCIA LISTE PIECES DETACHEES TORCHE SPARE PARTS LIST TORCH ERSATZTEILLISTE SCLAUCHPAKET PIEZAS DE REPUESTO ANTORCHA	CODICE CODE KODE

ELENCO PEZZI DI RICAMBIO
LISTE PIECES DETACHEES
SPARE PARTS LIST
ERSATZTEILLISTE
PIEZAS DE REPUESTO

MAXIMA 160 SYNERGIC

ELEMENTS LINE

TELWIN

Esploso macchina, Dessin appareil, Machine drawing, Explosions Zeichnung des Geräts, Diseño seccionado maquina.



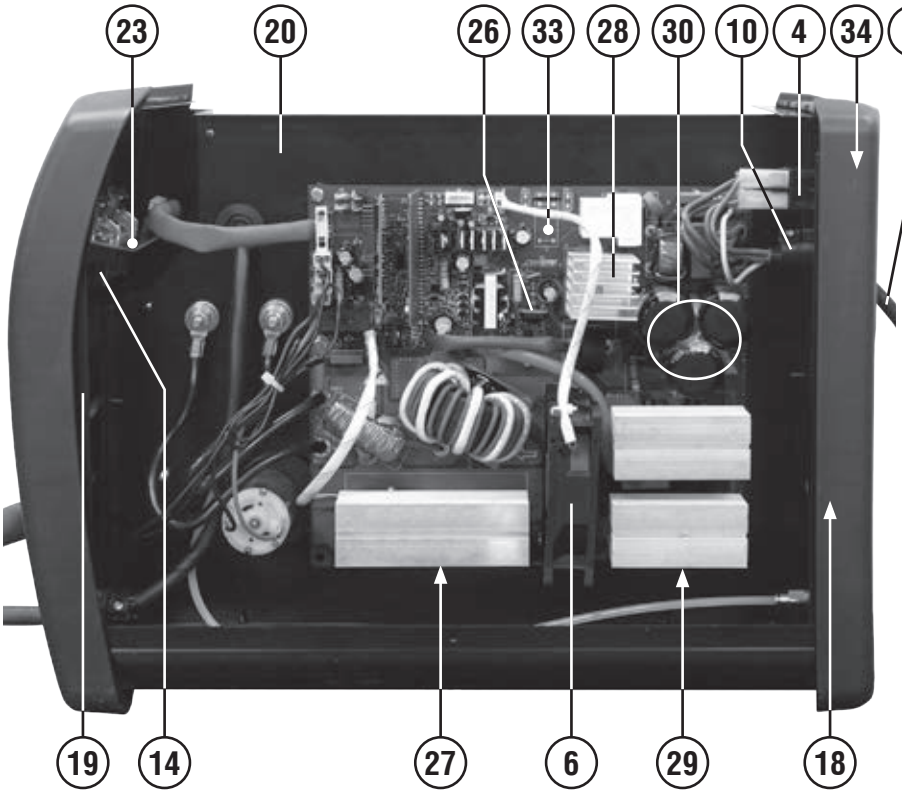

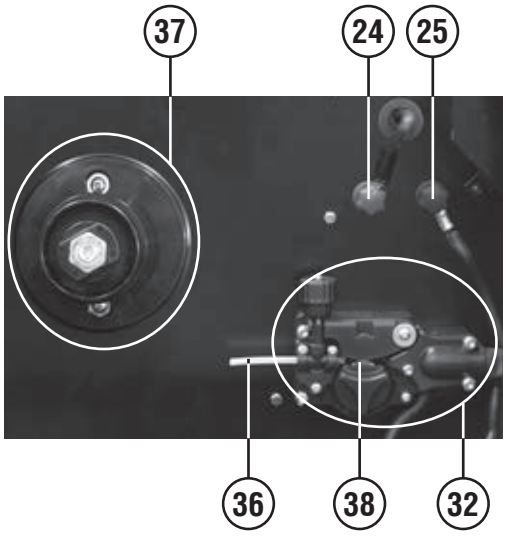

REF.	ELENCO PEZZI DI RICAMBIO PIECES DETACHEES SPARE PARTS LIST ERSATZTEILLISTE PIEZAS DE REPUESTO	CODICE CODE KODE
1	Pot. Carb. 10k lin. 0.20w 20% Pot. Carb. 10k lin. 0.20w 20% Pot. Carb. 10k lin. 0.20w 20% Pot. Carb. 10k lin. 0.20w 20% Pot. Carb. 10k lin. 0.20w 20%	112017
2	Cavo 10 mmq 1,8 m Cable 10 mmq 1,8 m Cable 10 mmq 1,8 m Kabel 10 mmq 1,8 m Cable 10 mmq 1,8 m	120301
3	Manopola Poigne Knob Griff Manjia	121394
4	Interruttore Interrupteur Switch Schalter Interruptor	122381
5	Cavo alim. 3g1.5 2 M spina schuko Cable alim. 3g1.5 2 M fiche schuko Mains cable 3g1.5 2 M schuko plug Netzkabel 3g1.5 2 M schuko stecker Cable alim. 3g1.5 2 M espina schuko	132155
6	Ventilatore Ventilateur Fan Ventilator Ventilador	152293
7	Frontale Partie frontal Front panel Gerätefront Frontal	321242
8	Retro Partie arriere Back panel Rückseite Trasera	321243
9	Manico Poignee Handle Handgriff Manija	321244
10	Pressacavo Presse cable Cable bushing Kabelhalter Prensa cable	322112
13	Maniglia Poignee Handle Handgriff Manija	322590
14	Guida luce Guide Guide Führung Guia	322898
16	Sportello Guichet Door Tür Portezuela	617520
17	Kit mantello Kit capot Cover kit Deckel kit Kit panel de cobertura	981858
18	Retro Partie arriere Back panel Rückseite Trasera	642526
19	Frontale Partie frontal Front panel Gerätefront Frontal	645828
20	Diaframma Diaphragme Diaphragm Diaphragma Diafragma	645764
21	Colorado 150b pinza di massa 150a Colorado 150b pince de masse 150a Colorado 150b work clamp 150a Colorado 150b masseklemme 150a Colorado 150b pinza de masa 150a	712001
22	Tw160 torcia mig 2m Tw160 torche mig 2m Tw160 mig torch 2m Tw160 mig brenner 2m Tw160 antorcha mig 2m	742402
23	Kit scheda pannello Kit platine frontal Kit front panel card Kit geraetefrontskarte Kit tarjeta frontal	981308
24	Kit morsetto di carica rosso Kit borne de charge rouge Red charging clamp kit Rote anschlussklemme kit Kit borne de carga rojo	981309
25	Kit morsetto di carica nero Kit borne de charge noire Kit black charging clamp Kit schwarze ladungsklemme Kit borne de carga negro	981310
26	Kit mosfet flyback Kit mosfet flyback Mosfet flyback kit Mosfet flyback kit Kit mosfet flyback	981585
27	Kit diodi Kit diodes Diode kit Diode kit Kit diodo	981591
28	Kit ponte monofase Kit pont monophase Single phase bridge kit Einfasige brücke kit Kit puente monofasico	981824
29	Kit igbt + diodo Kit igbt + diode Igbt + diode kit Igbt + diode kit Kit igbt + diodo	981825
30	Kit condensatore snap-in Kit condensateur snap-in Condenser kit snap-in Kondensator kit snap-in Kit condensator snap-in	981826
32	Kit motore Kit moteur Motor kit Motorkit Kit motor	981828
33	Kit scheda completa Kit platine complete Complete control pcb kit Komplette steurungskarte kit Kit tarjeta de controlo completa	981829
34	Copri interruttore Couvre interrupteur Switch cover Schalterdeckel Cubre interruptor	122353
35	Kit fondo Kit chassis Bottom kit Bodenteil kit Kit fondo	981834
36	Kit guaina entrata motore Kit gaine entree moteur Gas hose kit Drahtfuehrungsseelekit Kit vaina guiadera alambre	990097
37	Kit aspo Kit support bobine Reel kit Wickler kit Kit aspa	981990
38	Rullino traino 1r 0,6fe-0,8/0,9fl "c" Galet 1r 0,6fe-0,8/0,9fl "c" Feed roll 1r 0,6fe-0,8/0,9fl "c" Vorschubrolle 1r 0,6fe-0,8/0,9fl "c" Roldana 1r 0,6fe-0,8/0,9fl "c"	722529

Schema elettrico, Schéma électrique, Diagram, Schaltplan, Esquema de conexiones.

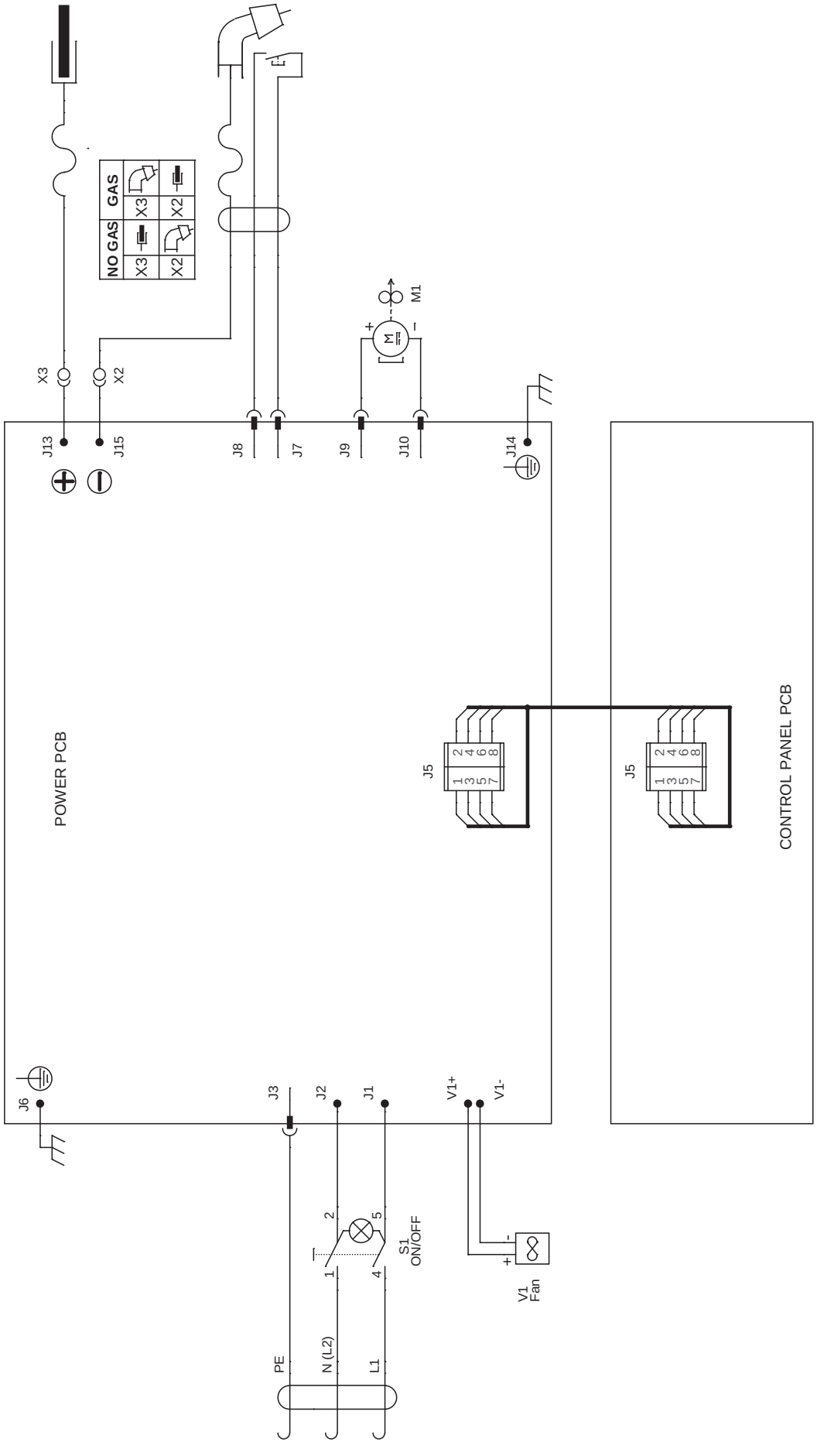

Esploso torcia, Dessin torche, Torch drawing, Schlauchpaket - Explosionszeichnung, Diseño seccionado antorcha.

742233

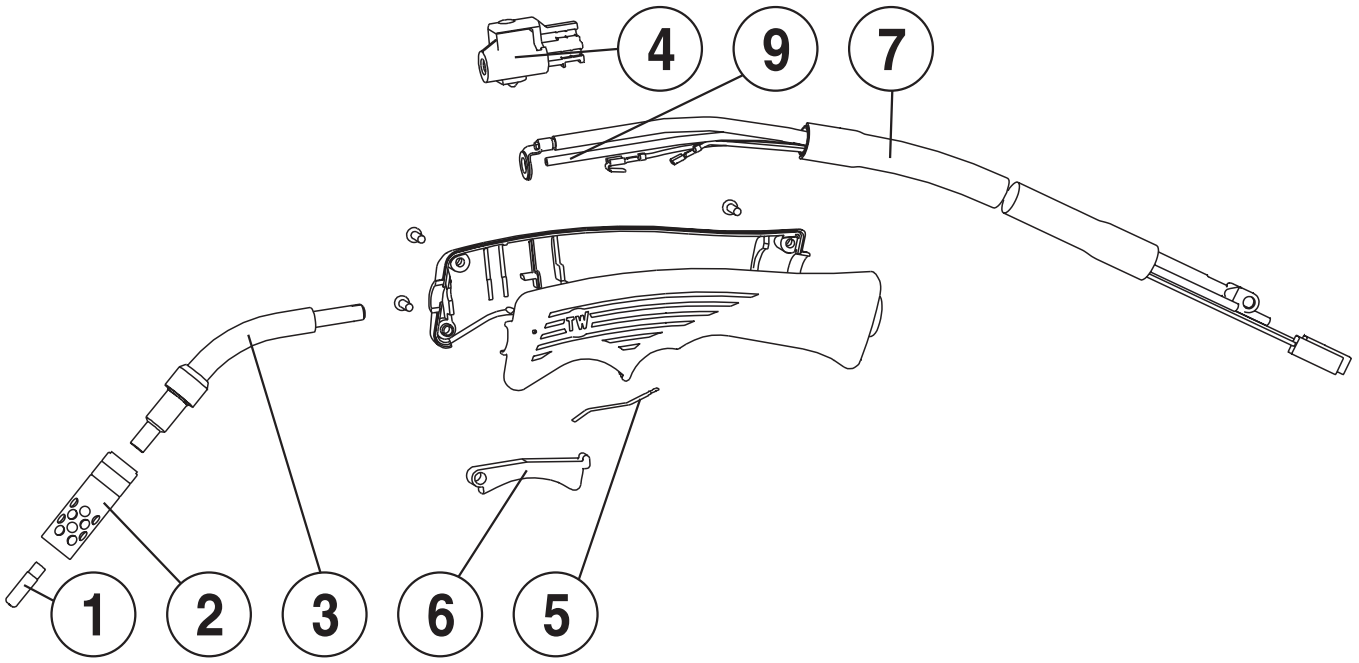

REF.	ELENCO PEZZI RICAMBIO TORCIA LISTE PIECES DETACHEES TORCHE SPARE PARTS LIST TORCH ERSATZTEILLISTE SCLAUCHPAKET PIEZAS DE REPUESTO ANTORCHA	CODICE CODE KODE
1	Tubetto di contatto d. 1 Mm al/flux m6 Tube contact d. 1 Mm al/flux m6 Contact tip d. 1 Mm al/flux m6 Kontaktdüse d. 1 Mm al/flux m6 Tubito de contacto d. 1 Mm al/flux m6	722552
2	Ugello cilindrico tw160–180,mt15,sp.Gun Bec conique tw160–180,mt15,sp.Gun Cylindrical nozzle tw160–180,mt15,sp.Gun Zylindrische düse tw160–180,mt15,sp.Gun Inyect. Cilindrico tw160–180,mt15,sp.Gun	722149
3	Lancia con diffusore tw 160 - 180 Lance avec diffuseur tw 160 - 180 Swan neck with diffuser tw 160 - 180 Brennerhals mit diffusor tw 160 - 180 Encorvado con diffusor tw 160 - 180	722078
4	Valvola Vanne Valve Ventil Valvula	990464
5	Molla per contatto torcia mig Ressort de contacte torche mig Contact spring for mig torch Kontaktfeder fuer mig brenner Muelle de contacto para antorcha mig	452097
6	Pulsante Poussoir Pushbutton Druckknopf Pulsador	322295
7	Fascio cavi Faisceau des cables Cables set Kabelnsatzt Haz de cables	990719
9	Guaina guidafilo d. 0,6-0,8 Mm 2,5 m Gaine pour fil d. 0,6-0,8 Mm 2,5 m Wire guide hose d. 0,6-0,8 Mm 2,5 m Drahtführungsseele d. 0,6-0,8 Mm 2,5 m Vaina guia hilo d. 0,6-0,8 Mm 2,5 m	742422

REF.	ELENCO PEZZI RICAMBIO TORCIA LISTE PIECES DETACHEES TORCHE SPARE PARTS LIST TORCH ERSATZTEILLISTE SCLAUCHPAKET PIEZAS DE REPUESTO ANTORCHA	CODICE CODE KODE

REF.	ELENCO PEZZI RICAMBIO TORCIA LISTE PIECES DETACHEES TORCHE SPARE PARTS LIST TORCH ERSATZTEILLISTE SCLAUCHPAKET PIEZAS DE REPUESTO ANTORCHA	CODICE CODE KODE

ELENCO PEZZI DI RICAMBIO
LISTE PIECES DETACHEES
SPARE PARTS LIST
ERSATZTEILLISTE
PIEZAS DE REPUESTO

MAXIMA 190 SYNERGIC

ELEMENTS LINE

TELWIN

Esploso macchina, Dessin appareil, Machine drawing, Explosions Zeichnung des Geräts, Diseño seccionado maquina.



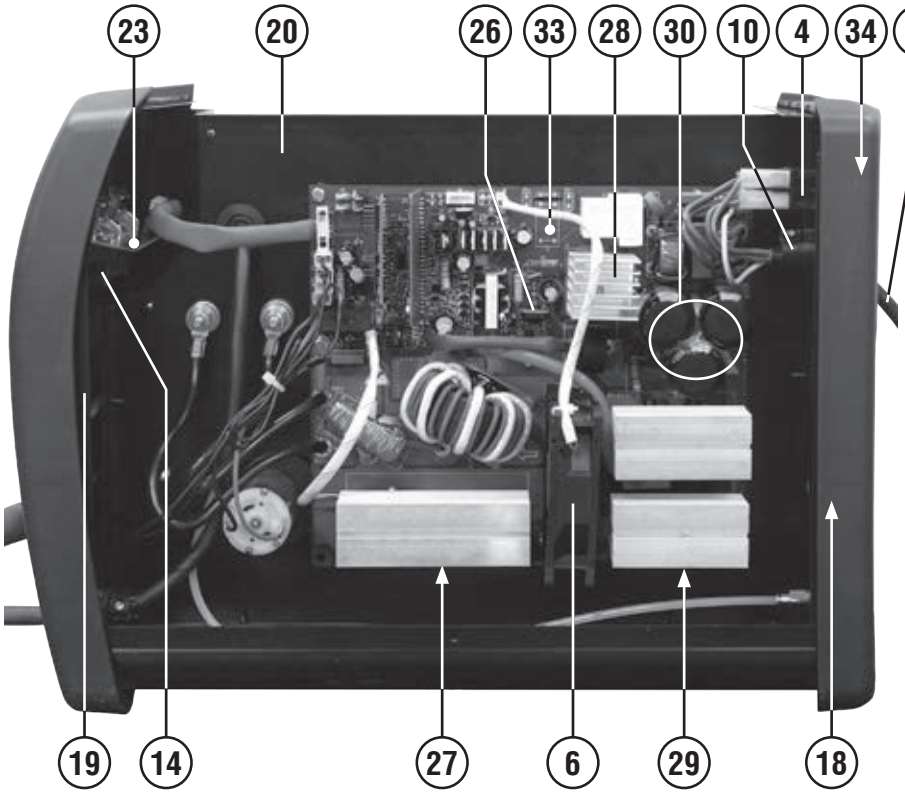

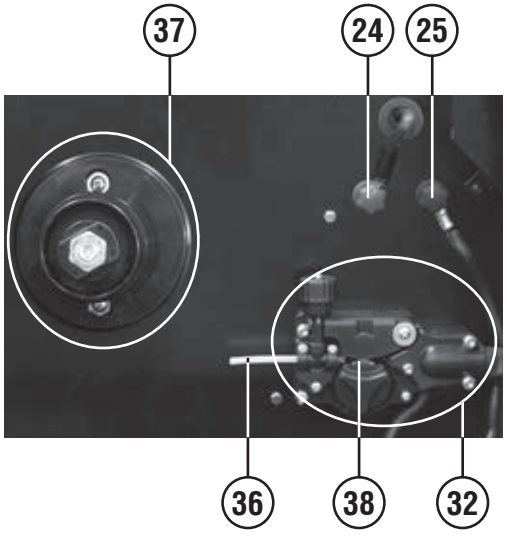

REF.	ELENCO PEZZI DI RICAMBIO PIECES DETACHEES SPARE PARTS LIST ERSATZTEILLISTE PIEZAS DE REPUESTO	CODICE CODE KODE
1	Pot. Carb. 10k lin. 0.20w 20% Pot. Carb. 10k lin. 0.20w 20% Pot. Carb. 10k lin. 0.20w 20% Pot. Carb. 10k lin. 0.20w 20% Pot. Carb. 10k lin. 0.20w 20%	112017
2	Cavo 16 mmq 1,8 m Cable 16 mmq 1,8 m Cable 16 mmq 1,8 m Kabel 16 mmq 1,8 m Cable 16 mmq 1,8 m	120302
3	Manopola Poigne Knob Griff Manjia	121394
4	Interruttore Interrupteur Switch Schalter Interruptor	122381
5	Cavo alim. 3g1.5 2 M spina schuko Cable alim. 3g1.5 2 M fiche schuko Mains cable 3g1.5 2 M schuko plug Netzkabel 3g1.5 2 M schuko stecker Cable alim. 3g1.5 2 M espina schuko	132155
6	Ventilatore Ventilateur Fan Ventilator Ventilador	152293
7	Frontale Partie frontal Front panel Gerätefront Frontal	321242
8	Retro Partie arriere Back panel Rückseite Trasera	321243
9	Manico Poignee Handle Handgriff Manija	321244
10	Pressacavo Presse cable Cable bushing Kabelhalter Prensa cable	322112
13	Maniglia Poignee Handle Handgriff Manija	322590
14	Guida luce Guide Guide Führung Guia	322898
16	Sportello Guichet Door Tür Portezuela	617522
17	Kit mantello Kit capot Cover kit Deckel kit Kit panel de cobertura	981859
18	Retro Partie arriere Back panel Rückseite Trasera	642527
19	Frontale Partie frontal Front panel Gerätefront Frontal	645828
20	Diaframma Diaphragme Diaphragm Diaphragma Diafragma	645764
21	Toledo 250 pinza di massa 250a Toledo 250 pince de masse 250a Toledo 250 work clamp 250a Toledo 250 masseklemme 250a Toledo 250 pinza de masa 250a	712030
22	Tw180 torcia mig/flux 2.5m Tw180 torche mig/flux 2.5m Tw180 mig/flux torch 2.5m Tw180 mig/flux brenner 2.5m Tw180 antorcha mig/flux 2.5m	742605
23	Kit scheda pannello Kit platine frontal Kit front panel card Kit geraetefrontskarte Kit tarjeta frontal	981308
24	Kit morsetto di carica rosso Kit borne de charge rouge Red charging clamp kit Rote anschlussklemme kit Kit borne de carga rojo	981309
25	Kit morsetto di carica nero Kit borne de charge noire Kit black charging clamp Kit schwarze ladungsklemme Kit borne de carga negro	981310
26	Kit mosfet flyback Kit mosfet flyback Mosfet flyback kit Mosfet flyback kit Kit mosfet flyback	981585
27	Kit diodi Kit diodes Diode kit Diode kit Kit diodo	981591
28	Kit ponte monofase Kit pont monophase Single phase bridge kit Einfasige brücke kit Kit puente monofasico	981824
29	Kit igbt + diodo Kit igbt + diode Igbt + diode kit Igbt + diode kit Kit igbt + diodo	981825
30	Kit condensatore snap-in Kit condensateur snap-in Condenser kit snap-in Kondensator kit snap-in Kit condensator snap-in	981826
32	Kit motore Kit moteur Motor kit Motorkit Kit motor	981847
33	Kit scheda completa Kit platine complete Complete control pcb kit Komplette steurungskarte kit Kit tarjeta de controlo completa	981832
34	Copri interruttore Couvre interrupteur Switch cover Schalterdeckel Cubre interruptor	122353
35	Kit fondo Kit chassis Bottom kit Bodenteil kit Kit fondo	981834
36	Kit guaina entrata motore Kit gaine entree moteur Gas hose kit Drahtfuehrungsseelekit Kit vaina guiadera alambre	990097
37	Kit aspo Kit support bobine Reel kit Wickler kit Kit aspa	981990
38	Rullino traino 1r 0,6fe-0,8/0,9fl "c" Galet 1r 0,6fe-0,8/0,9fl "c" Feed roll 1r 0,6fe-0,8/0,9fl "c" Vorschubrolle 1r 0,6fe-0,8/0,9fl "c" Roldana 1r 0,6fe-0,8/0,9fl "c"	722529

Schema elettrico, Schéma électrique, Diagram, Schaltplan, Esquema de conexiones.

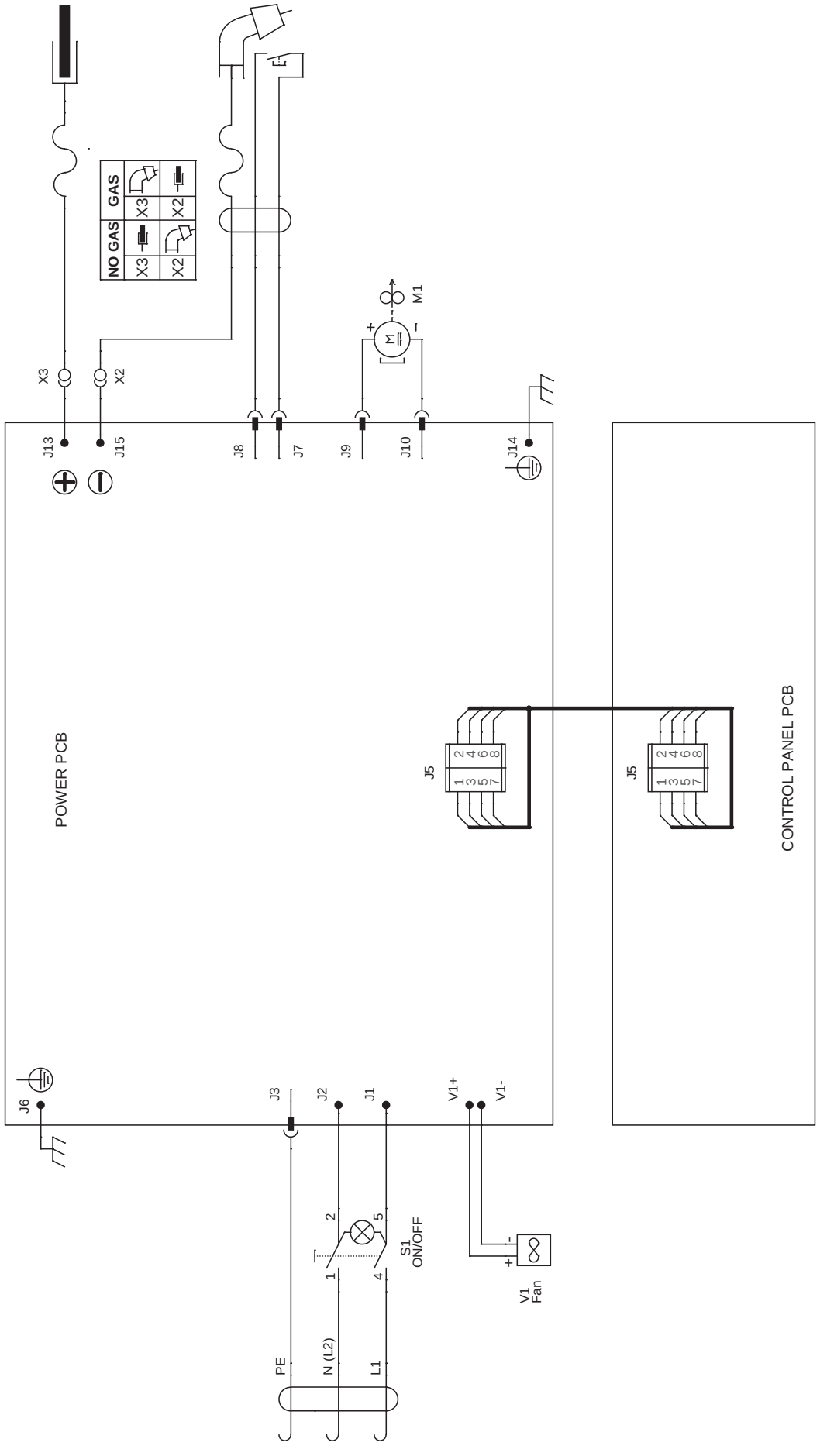

Esploso torcia, Dessin torche, Torch drawing, Schlauchpaket - Explosionszeichnung, Diseño seccionado antorcha.

742605

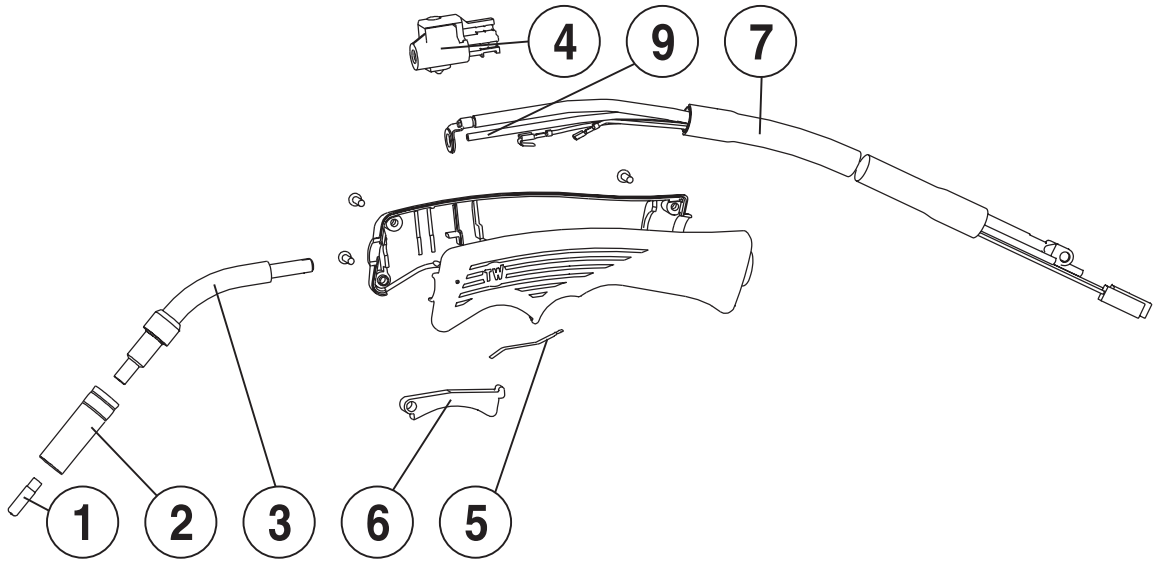

REF.	ELENCO PEZZI RICAMBIO TORCIA LISTE PIECES DETACHEES TORCHE SPARE PARTS LIST TORCH ERSATZTEILLISTE SCLAUCHPAKET PIEZAS DE REPUESTO ANTORCHA	CODICE CODE KODE
1	Tubetto di contatto d. 1 Mm al/flux m6 Tube contact d. 1 Mm al/flux m6 Contact tip d. 1 Mm al/flux m6 Kontaktdüse d. 1 Mm al/flux m6 Tubito de contacto d. 1 Mm al/flux m6	722552
2	Ugello cilindrico tw160–180,mt15,sp.Gun Bec conique tw160–180,mt15,sp.Gun Cylindrical nozzle tw160–180,mt15,sp.Gun Zylindrische düse tw160–180,mt15,sp.Gun Inyect. Cilindrico tw160–180,mt15,sp.Gun	722149
3	Lancia con diffusore tw 160 - 180 Lance avec diffuseur tw 160 - 180 Swan neck with diffuser tw 160 - 180 Brennerhals mit diffusor tw 160 - 180 Encorvado con diffusor tw 160 - 180	722078
4	Valvola Vanne Valve Ventil Valvula	990464
5	Molla per contatto torcia mig Ressort de contacte torche mig Contact spring for mig torch Kontaktfeder fuer mig brenner Muelle de contacto para antorcha mig	452097
6	Pulsante Poussoir Pushbutton Druckknopf Pulsador	322295
7	Kit fascio cavi 10mmq Kit faisceau cables 10mmq Kit cable set 10 mmq Kit kabelnset 10mmq Kit fajo cables 10mmq	990602
9	Guaina d.0,6-0,8mm 2m fe/inox/flux Gaine d.0,6-0,8 Mm 2m fe/inox/flux Guide hose d.0,6-0,8mm 2m fe/inox/flux Drahtführung d.0,6-0,8mm 2m fe/inox/flux Vaina d. 0,6-0,8mm 2m fe/inox/flux	722077

REF.	ELENCO PEZZI RICAMBIO TORCIA LISTE PIECES DETACHEES TORCHE SPARE PARTS LIST TORCH ERSATZTEILLISTE SCLAUCHPAKET PIEZAS DE REPUESTO ANTORCHA	CODICE CODE KODE

REF.	ELENCO PEZZI RICAMBIO TORCIA LISTE PIECES DETACHEES TORCHE SPARE PARTS LIST TORCH ERSATZTEILLISTE SCLAUCHPAKET PIEZAS DE REPUESTO ANTORCHA	CODICE CODE KODE

ELENCO PEZZI DI RICAMBIO
LISTE PIECES DETACHEES
SPARE PARTS LIST
ERSATZTEILLISTE
PIEZAS DE REPUESTO

MAXIMA 200 SYNERGIC

ELEMENTS LINE

TELWIN

Esploso macchina, Dessin appareil, Machine drawing, Explosions Zeichnung des Geräts, Diseño seccionado maquina.



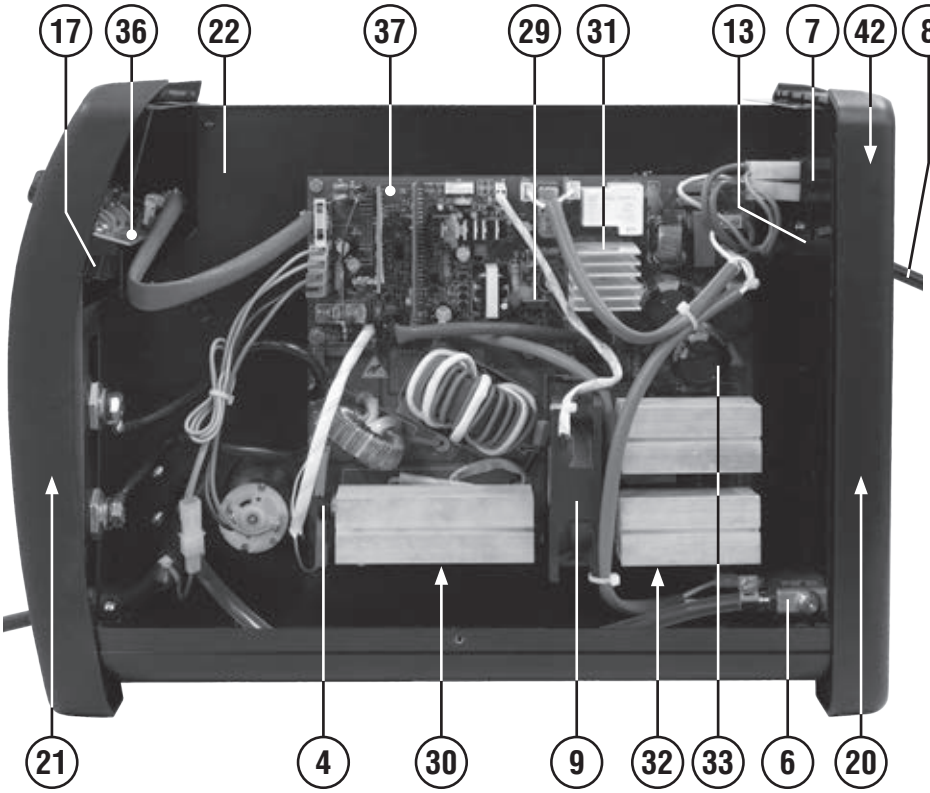

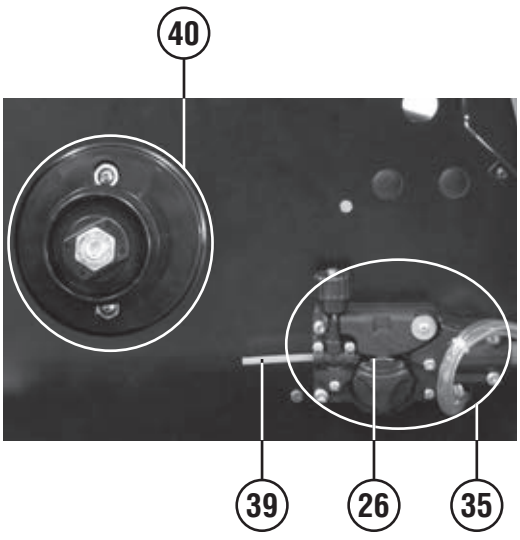

REF.	ELENCO PEZZI DI RICAMBIO PIECES DETACHEES SPARE PARTS LIST ERSATZTEILLISTE PIEZAS DE REPUESTO	CODICE CODE KODE
1	Pot. Carb. 10k lin. 0.20w 20% Pot. Carb. 10k lin. 0.20w 20% Pot. Carb. 10k lin. 0.20w 20% Pot. Carb. 10k lin. 0.20w 20% Pot. Carb. 10k lin. 0.20w 20%	112017
2	Cavo 16 mmq 1,8 m - spina atlas 25 Cable 16 mmq 1,8 m - fiche atlas 25 Cable 16 mmq 1,8 m - plug atlas 25 Kabel 16 mmq 1,8 m - stecker atlas 25 Cable 16 mmq 1,8 m - enchufe atlas 25	120602
3	Manopola Poignee Knob Griff Manija	121751
4	Termostato Thermostat Thermostat Thermostat Termostato	121748
5	Manopola Poigne Knob Griff Manjia	121394
6	Elettrovalvola Electrovanne Electrovalve Elektroventil Electrovalvula	121800
7	Interruttore Interrupteur Switch Schalter Interruptor	122381
8	Cavo alim. 3g1.5 2 M spina schuko Cable alim. 3g1.5 2 M fiche schuko Mains cable 3g1.5 2 M schuko plug Netzkabel 3g1.5 2 M schuko stecker Cable alim. 3g1.5 2 M espina schuko	132155
9	Ventilatore Ventilateur Fan Ventilator Ventilador	152293
10	Retro Partie arriere Back panel Rückseite Trasera	321243
11	Manico Poignee Handle Handgriff Manija	321244
12	Frontale Partie frontal Front panel Gerätefront Frontal	321313
13	Pressacavo Presse cable Cable bushing Kabelhalter Prensa cable	322112
16	Maniglia Poignee Handle Handgriff Manija	322590
17	Guida luce Guide Guide Führung Guia	322898
19	Sportello Guichet Door Tuer Portezuela	617527
20	Retro Partie arriere Back panel Rückseite Trasera	642644
21	Frontale Partie frontal Front panel Gerätefront Frontal	645828
22	Diaframma Diaphragme Diaphragm Diaphragma Diafragma	645829
23	Toledo 250 pinza di massa 250a Toledo 250 pince de masse 250a Toledo 250 work clamp 250a Toledo 250 masseklemme 250a Toledo 250 pinza de masa 250a	712030
24	Presa atlas 25mmq Prise atlas 25mmq Socket atlas 25mmq Steckdose atlas 25mmq Enchufe atlas 25mmq	712035
25	Spina atlas 25mmq Fiche atlas 25mmq Atlas plug 25mmq Atlas stecker 25mmq Enchufe atlas 25mmq	712039
26	Rullino traino 1r 0,6fe-0,8/0,9fl “c” Galet 1r 0,6fe-0,8/0,9fl “c” Feed roll 1r 0,6fe-0,8/0,9fl “c” Vorschubrolle 1r 0,6fe-0,8/0,9fl “c” Roldana 1r 0,6fe-0,8/0,9fl “c”	722529
27	Attacco torcia Attelage torche Torch connection Schlauchpaketanschluss Enganche antorcha	723051
28	Mt15 torcia mig 3m (red) Mt15 torche mig 3m (red) Mt15 mig torch 3m (red) Mt15 mig brenner 3m (red) Mt15 antorcha mig 3m (red)	742180
29	Kit mosfet flyback Kit mosfet flyback Mosfet flyback kit Mosfet flyback kit Kit mosfet flyback	981585
30	Kit diodi Kit diodes Diode kit Diode kit Kit diodo	981591
31	Kit ponte monofase Kit pont monophase Single phase bridge kit Einfasige brücke kit Kit puente monofasico	981824
32	Kit igbt + diodo Kit igbt + diode Igbt + diode kit Igbt + diode kit Kit igbt + diodo	981825
33	Kit condensatore snap-in Kit condensateur snap-in Condenser kit snap-in Kondensator kit snap-in Kit condensator snap-in	981826
34	Kit fondo Kit chassis Bottom kit Bodenteil kit Kit fondo	981834
35	Kit motore Kit moteur Motor kit Motorkit Kit motor	981847
36	Kit scheda pannello Kit platine frontal Front panel card kit Gerätefrontskarte kit Kit tarjeta frontal	981971
37	Kit scheda completa Kit platine complete Complete control pcb kit Komplette steurungskarte kit Kit tarjeta de controlo completa	981972
38	Kit mantello Kit capot Cover kit Deckel kit Kit panel de cobertura	981973
39	Kit guaina entrata motore Kit gaine entree moteur Gas hose kit Drahtfuehrungsseelekit Kit vaina guiadera alambre	990097
40	Kit aspo Kit support bobine Reel kit Wickler kit Kit aspa	981990
41	Commutatore Commutateur Switch Schalter Switch	121749
42	Copri interruttore Couvre interrupteur Switch cover Schalterdeckel Cubre interruptor	122353

Schema elettrico, Schéma électrique, Diagram, Schaltplan, Esquema de conexiones.

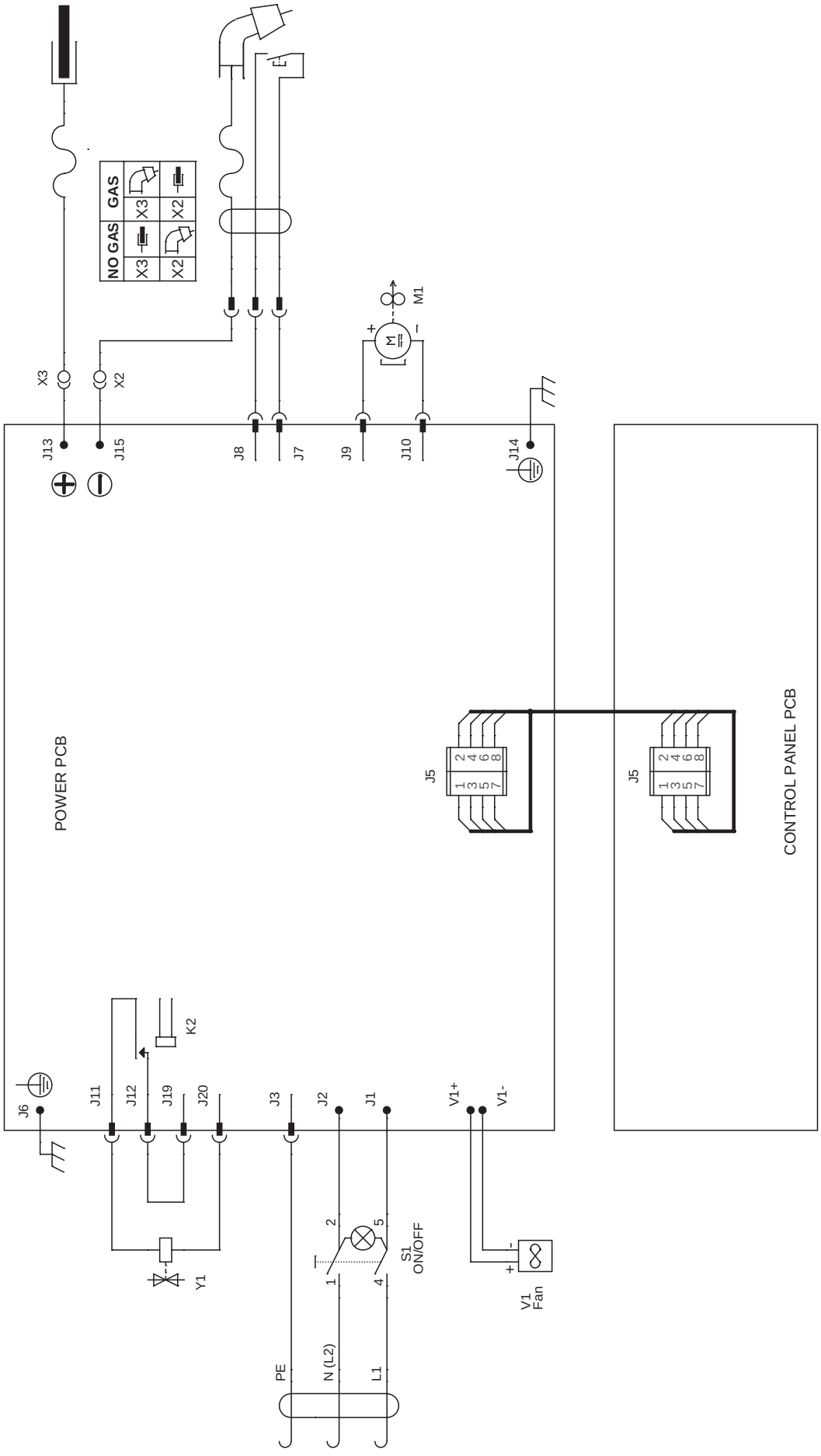

Esploso torcia, Dessin torche, Torch drawing, Schlauchpaket - Explosionszeichnung, Diseño seccionado antorcha.

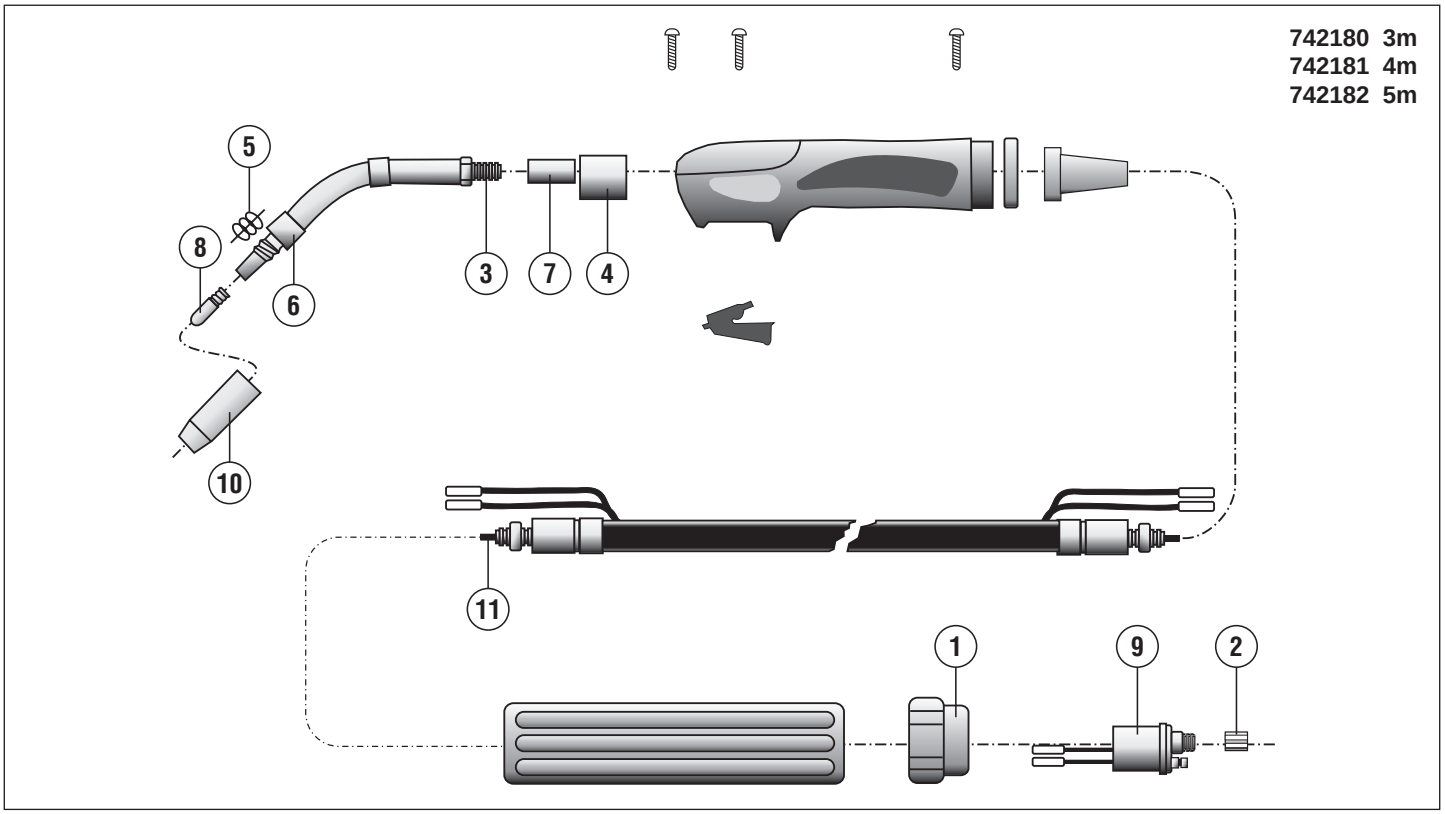

REF.	ELENCO PEZZI RICAMBIO TORCIA LISTE PIECES DETACHEES TORCHE SPARE PARTS LIST TORCH ERSATZTEILLISTE SCLAUCHPAKET PIEZAS DE REPUESTO ANTORCHA	CODICE CODE KODE
1	Ghiera fissaggio Embout fixage Ring nut Nutmutter Virola por fiyacion	722007
2	Dado fissaggio guaina Ecrou fixage gaine Liner nut Befestigungsmutter Dado por fiyacion vaina	722013
3	Lancia mt15 Lance mt15 Swan neck mt15 Brennerhals mt15 Encorvado mt15	722305
4	Isolante corpo torcia Isolant corps de torche Torch connection insulation Brenneranschlussblock isolierteil Aislador cuerpo de antorcha	722693
5	Molla per ugello tw160–180 mt15,spoolgun Ressort p. Buse tw160–180,mt15,spoolgun Nozzle spring tw 160–180, mt15, spoolgun Düsenfeder tw 160–180, mt15, spoolgun Muelle inyector tw160–180,mt15,spoolgun	722319
6	Isolante diffusore Isolant pour diffuseur Diffuser insulation Isolierbuchse Aislador diffusor	722326
7	Corpo torcia Corps de torche Torch connection Brenneranschlussblock Cuerpo de antorcha	722325
8	Tubetto di contatto d. 0,6 Mm fe Tube contact d. 0,6 Mm fe Contact tip d. 0,6 Mm fe Kontaktdüse d. 0,6 Mm fe Tubito de contacto d. 0,6 Mm fe	722415
8	Tubetto di contatto d. 0,8 Mm fe m6 Tube contact d. 0,8 Mm fe m6 Contact tip d. 0,8 Mm fe m6 Kontaktdüse d. 0,8 Mm fe m6 Tubito de contacto d. 0,8 Mm fe m6	722416
9	Corpo torcia Corp de torche Torch assy Brennerskörper Enganche antorcha	722441
10	Ugello cilindrico tw160–180,mt15,sp.Gun Bec conique tw160–180,mt15,sp.Gun Cylindrical nozzle tw160–180,mt15,sp.Gun Zylindrische düse tw160–180,mt15,sp.Gun Inyect. Cilindrico tw160–180,mt15,sp.Gun	722149
10	Ugello conico tw 160–180, mt15,spoolgun Buse conique tw 160–180, mt15,spoolgun Conical nozzle tw 160–180, mt15,spoolgun Gasdüse konisch tw 160–180,mt15,spoolgun Inyector conico tw 160–180,mt15,spoolgun	722423

REF.	ELENCO PEZZI RICAMBIO TORCIA LISTE PIECES DETACHEES TORCHE SPARE PARTS LIST TORCH ERSATZTEILLISTE SCLAUCHPAKET PIEZAS DE REPUESTO ANTORCHA	CODICE CODE KODE
11	Guaina guidafilo ø0.6-0.8 3m blu Gaine pour fil ø0.6-0.8 3m bleu Wire guide hose ø0.6-0.8 3m blue Drahtführungsseele ø0.6-0.8 3m blue Vaina guia hilo ø0.6-0.8 3m blue	722437
11	Guaina guidafilo ø1.0-1.2 3m rossa Gaine pour fil ø1.0-1.2 3m rouge Wire guide hose ø1.0-1.2 3m red Drahtführungsseele ø1.0-1.2 3m rot Vaina guia hilo ø1.0-1.2 3m roja	722689

REF.	ELENCO PEZZI RICAMBIO TORCIA LISTE PIECES DETACHEES TORCHE SPARE PARTS LIST TORCH ERSATZTEILLISTE SCLAUCHPAKET PIEZAS DE REPUESTO ANTORCHA	CODICE CODE KODE

ELENCO PEZZI DI RICAMBIO
LISTE PIECES DETACHEES
SPARE PARTS LIST
ERSATZTEILLISTE
PIEZAS DE REPUESTO

ELEMENTS LINE

MAXIMA 230 SYNERGIC

TELWIN

Esploso macchina, Dessin appareil, Machine drawing, Explosions Zeichnung des Geräts, Diseño seccionado maquina.

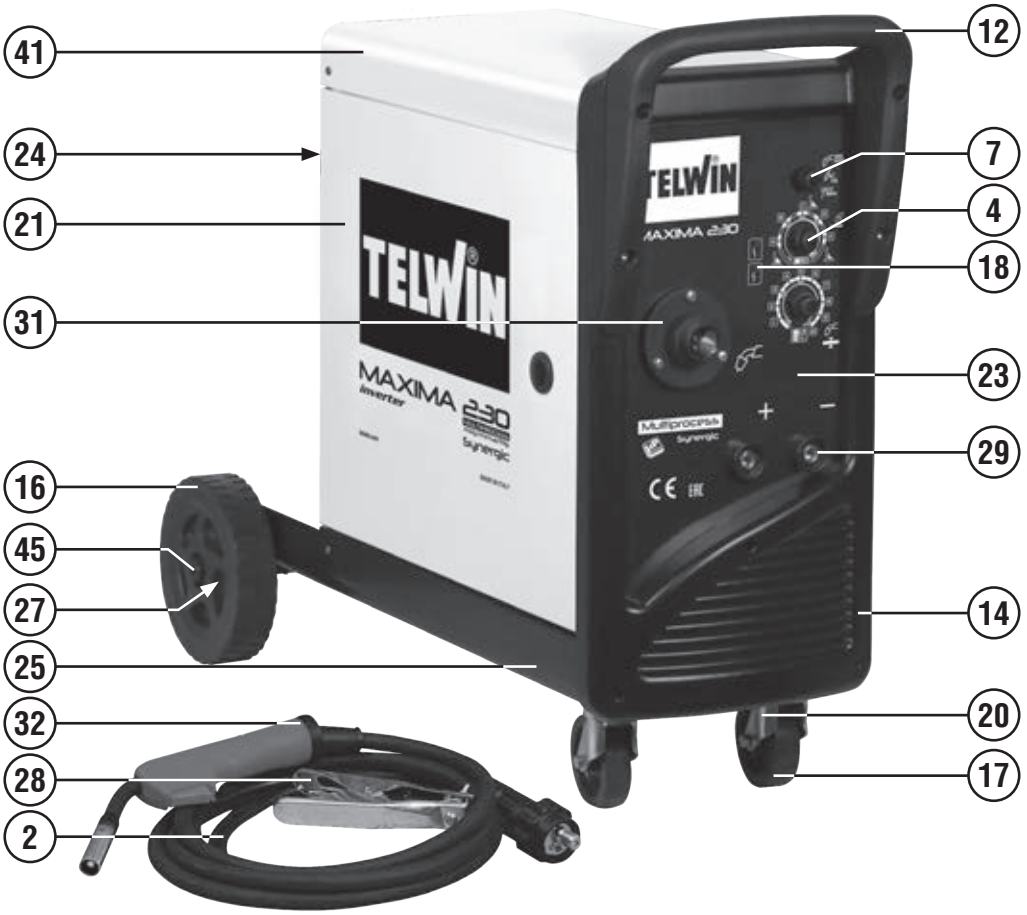

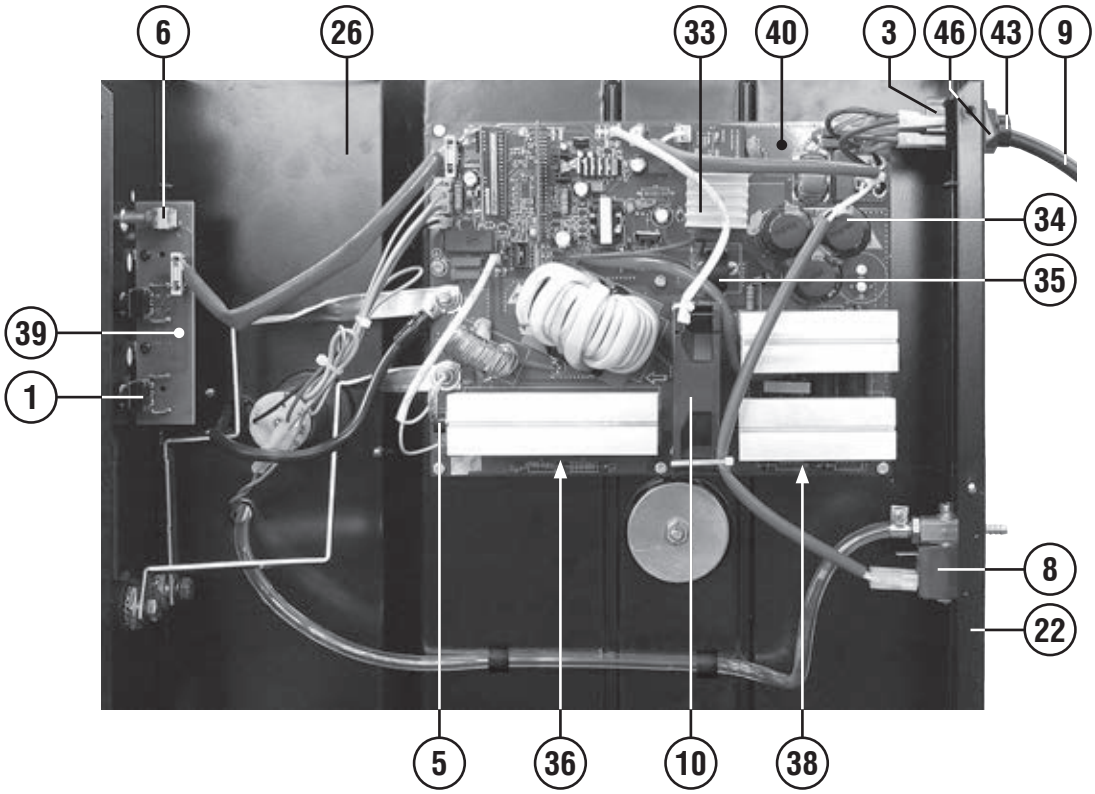

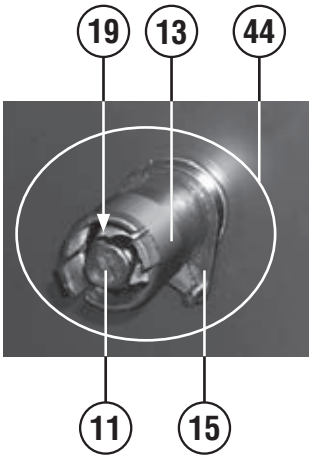

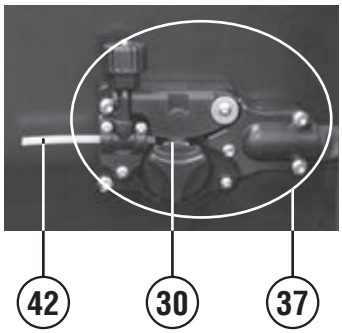

REF.	ELENCO PEZZI DI RICAMBIO PIECES DETACHEES SPARE PARTS LIST ERSATZTEILLISTE PIEZAS DE REPUESTO	CODICE CODE KODE
1	Pot. Carb. 10k lin. 0.20w 20% Pot. Carb. 10k lin. 0.20w 20% Pot. Carb. 10k lin. 0.20w 20% Pot. Carb. 10k lin. 0.20w 20% Pot. Carb. 10k lin. 0.20w 20%	112017
2	Cavo 16 mmq 1,8 m - spina atlas 25 Cable 16 mmq 1,8 m - fiche atlas 25 Cable 16 mmq 1,8 m - plug atlas 25 Kabel 16 mmq 1,8 m - stecker atlas 25 Cable 16 mmq 1,8 m - enchufe atlas 25	120602
3	Interruttore Interrupteur Switch Schalter Interruptor	121248
4	Manopola Poigne Knob Griff Manjia	121394
5	Termostato Thermostat Thermostat Thermostat Termostato	121748
6	Commutatore Commutateur Switch Schalter Switch	121749
7	Manopola Poignee Knob Griff Manija	121751
8	Elettrovalvola Electrovanne Electrovalve Elektroventil Electrovalvula	121800
9	Cavo alimentazione Cable de reseau Mains cable Netzkabel Cable de alimentation	132157
10	Ventilatore Ventilateur Fan Ventilator Ventilador	152293
11	Volantino per aspo Volant pour support bobine Reel handwheel Wicklerhandrad Volant por aspa	312137
12	Manico Poignee Handle Handgriff Manija	312408
13	Distanziale per aspo Entretoise pour support bobine Reel spacer Distanzstueck Espàciador por aspa	321210
14	Cornice Cadre Frame Rahmen Marco	321296
15	Aspo Support bobine Reel Wickler Aspa	322081
16	Ruota fissa Roue fixe Fixed wheel Fixes rad Rueda firme	322201
17	Ruota Roue Wheel Rad Rueda	322245
18	Guida luce Guide Guide Führung Guia	322898
19	Molla per aspo Ressort pour support bobine Reel spring Wicklerfeder Muelle por aspa	452057
20	Supporto girevole + freno Support tournant + frein Swivel support + brake Drehbarerhalter + bremse Sosten giratorio + freno	484688
21	Sportello Guichet Door Tuer Portezuela	617530
22	Retro Partie arriere Back panel Rueckseite Trasera	642662
23	Frontale Partie frontal Front panel Geraetefront Frontal	642663
24	Staffa portabombola Etrier porte-bouteille Bottle-holder bracket Kasten fuer flasche Estribo porta bombona	645673
25	Kit fondo Kit chassis Bottom kit Bodenteil kit Kit fondo	982031
26	Diaframma Diaphragme Diaphragm Diaphragma Diafragma	645843
27	Asse ruote Axe roues Wheels axle Radachse Eje ruedas	681065
28	Toledo 250 pinza di massa 250a Toledo 250 pince de masse 250a Toledo 250 work clamp 250a Toledo 250 masseklemme 250a Toledo 250 pinza de masa 250a	712030
29	Presa atlas 25mmq Prise atlas 25mmq Socket atlas 25mmq Steckdose atlas 25mmq Enchufe atlas 25mmq	712035
30	Rullino traino 1r 0,6fe-0,8/0,9fe "c" Galet1r 0,6fe-0,8/0,9fe "c" Feed roll 1r 0,6fe-0,8/0,9fe "c" Vorschubrolle 1r 0,6fe-0,8/0,9fe "c" Roldana 1r 0,6fe-0,8/0,9fe "c"	722019
31	Attacco torcia Attelage torche Torch connection Schlauchpaketanschluss Enganche antorcha	723051
32	Mt15 torcia mig 3m (red) Mt15 torche mig 3m (red) Mt15 mig torch 3m (red) Mt15 mig brenner 3m (red) Mt15 antorcha mig 3m (red)	742180
33	Kit ponte monofase Kit pont monophase Single phase bridge kit Einfasige brücke kit Kit puente monofasico	981581
34	Kit condensatore snap-in Kit condensateur snap-in Condenser kit snap-in Kondensator kit snap-in Kit condensator snap-in	981584
35	Kit mosfet flyback Kit mosfet flyback Mosfet flyback kit Mosfet flyback kit Kit mosfet flyback	981585
36	Kit diodi Kit diodes Diode kit Diode kit Kit diodo	981593
37	Kit motore Kit moteur Motor kit Motorkit Kit motor	981831
38	Kit igbt + diodi Kit igbt + diodes Kit igbt + diodes Kit igbt + dioden Kit igbt + diodos	982027
39	Kit scheda pannello Kit platine frontal Front panel card kit Geraetefrontskarte kit Kit tarjeta frontal	982028
40	Kit scheda completa Kit platine complete Complete control pcb kit Komplette steurungskarte kit Kit tarjeta de controlo completa	982029
41	Kit mantello Kit capot Cover kit Deckel kit Kit panel de cobertura	982030
42	Kit guaina entrata motore Kit gaine entree moteur Gas hose kit Drahtfuehrungsseelekit Kit vaina guiadera alambre	990097
43	Kit pressacavo + ghiera Kit presse cable + embout Kit cable bushing + ring nut Kit kabelhalter + nutmutter Kit prensa cable + virola	990046
44	Kit aspo Kit support bobine Reel kit Wickler kit Kit aspa	990264
45	Tappo blocca ruote Bouchon ferme roue Wheel locking ring Radsperrestopfen Tapon de bloqueo rueda	322102
46	Copri interruttore Couvre interrupteur Switch cover Schalterdeckel Cubre interruptor	122353

Schema elettrico, Schéma électrique, Diagram, Schaltplan, Esquema de conexiones.

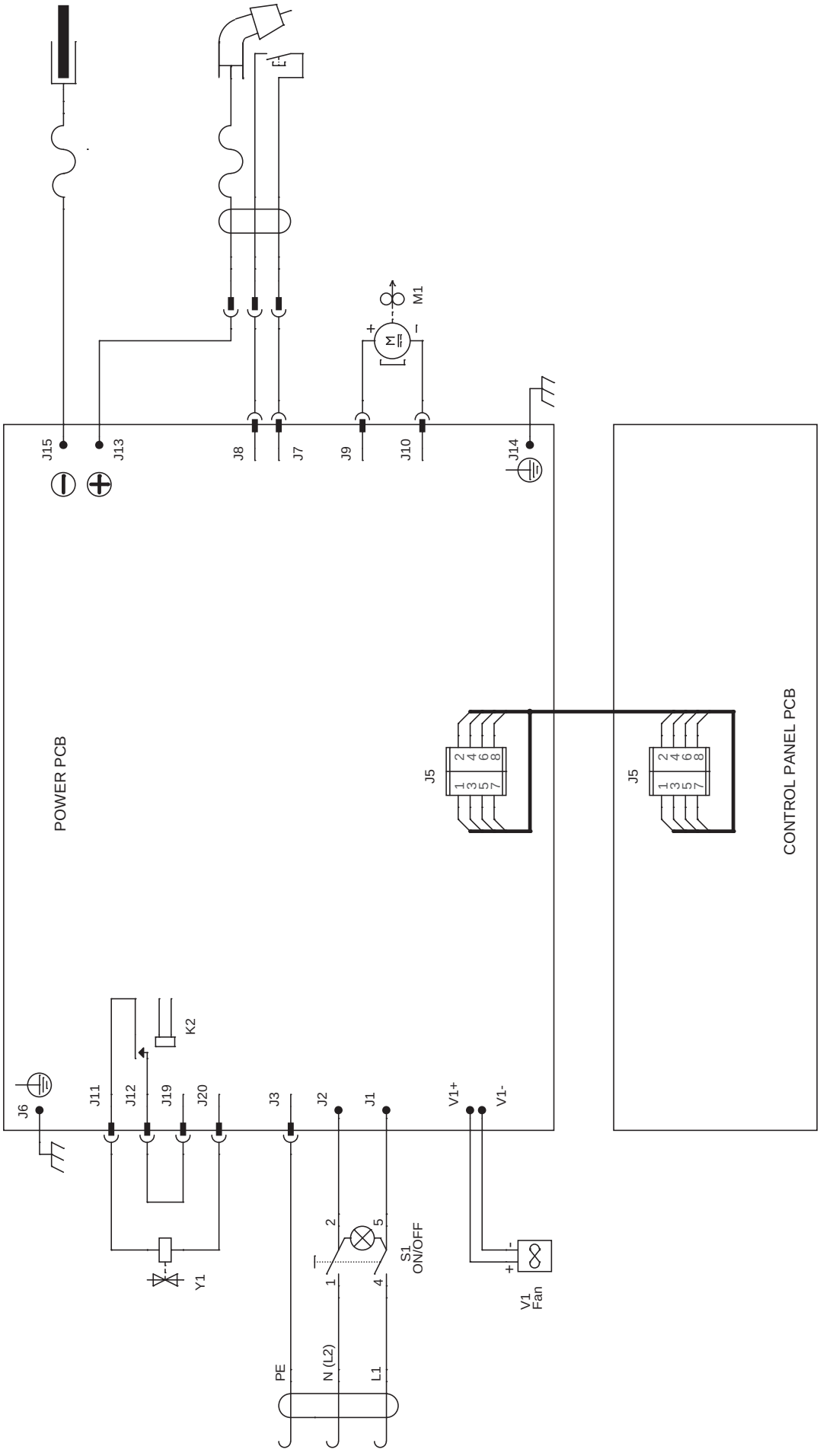

Esploso torcia, Dessin torche, Torch drawing, Schlauchpaket - Explosionszeichnung, Diseño seccionado antorcha.

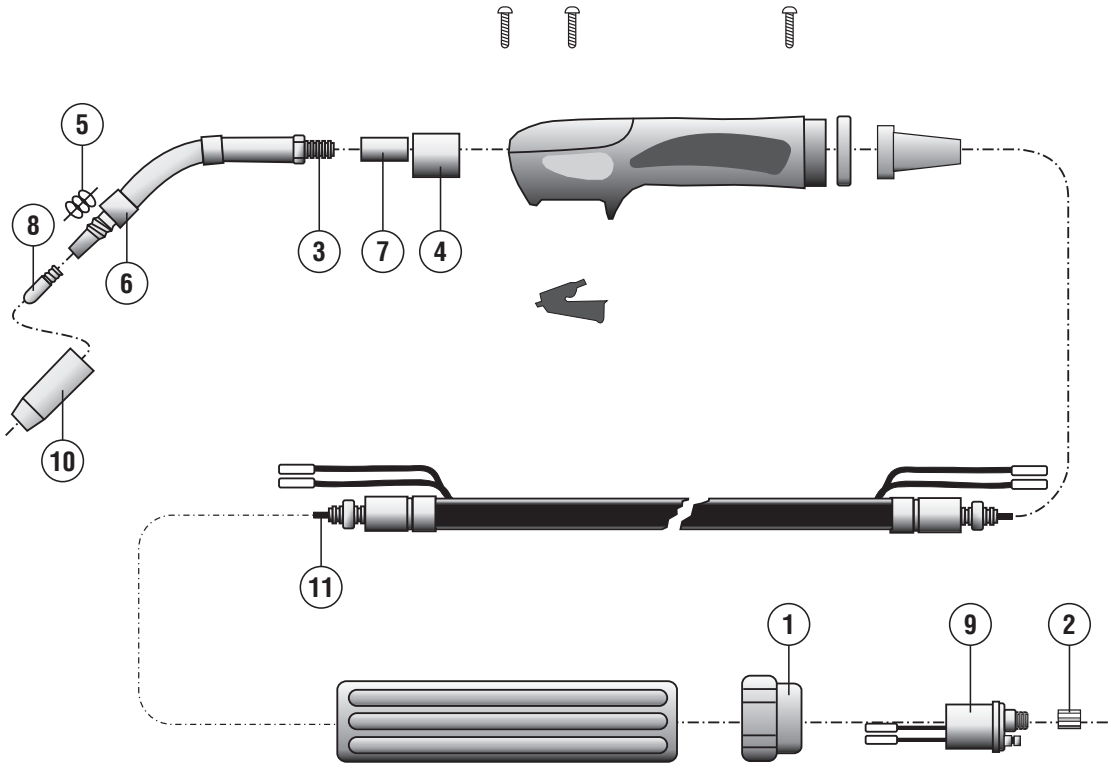

742180 3m
742181 4m
742182 5m

REF.	ELENCO PEZZI RICAMBIO TORCIA LISTE PIECES DETACHEES TORCHE SPARE PARTS LIST TORCH ERSATZTEILLISTE SCLAUCHPAKET PIEZAS DE REPUESTO ANTORCHA	CODICE CODE KODE
1	Ghiera fissaggio Embout fixage Ring nut Nutmutter Virola por fiyacion	722007
2	Dado fissaggio guaina Ecrou fixage gaine Liner nut Befestigungsmutter Dado por fiyacion vaina	722013
3	Lancia mt15 Lance mt15 Swan neck mt15 Brennerhals mt15 Encorvado mt15	722305
4	Isolante corpo torcia Isolant corps de torche Torch connection insulation Brenneranschlussblock isolierteil Aislador cuerpo de antorcha	722693
5	Molla per ugello tw160–180 mt15,spoolgun Ressort p. Buse tw160–180,mt15,spoolgun Nozzle spring tw 160–180, mt15, spoolgun Düsenfeder tw 160–180, mt15, spoolgun Muelle inyector tw160–180,mt15,spoolgun	722319
6	Isolante diffusore Isolant pour diffuseur Diffuser insulation Isolierbuchse Aislador diffusor	722326
7	Corpo torcia Corps de torche Torch connection Brenneranschlussblock Cuerpo de antorcha	722325
8	Tubetto di contatto d. 0,6 Mm fe Tube contact d. 0,6 Mm fe Contact tip d. 0,6 Mm fe Kontaktdüse d. 0,6 Mm fe Tubito de contacto d. 0,6 Mm fe	722415
8	Tubetto di contatto d. 0,8 Mm fe m6 Tube contact d. 0,8 Mm fe m6 Contact tip d. 0,8 Mm fe m6 Kontaktdüse d. 0,8 Mm fe m6 Tubito de contacto d. 0,8 Mm fe m6	722416
9	Corpo torcia Corp de torche Torch assy Brennerskörper Enganche antorcha	722441
10	Ugello cilindrico tw160–180,mt15,sp.Gun Bec conique tw160–180,mt15,sp.Gun Cylindrical nozzle tw160–180,mt15,sp.Gun Zylindrische düse tw160–180,mt15,sp.Gun Inyect. Cilindrico tw160–180,mt15,sp.Gun	722149
10	Ugello conico tw 160–180, mt15,spoolgun Buse conique tw 160–180, mt15,spoolgun Conical nozzle tw 160–180, mt15,spoolgun Gasdüse konisch tw 160–180,mt15,spoolgun Inyector conico tw 160–180,mt15,spoolgun	722423

REF.	ELENCO PEZZI RICAMBIO TORCIA LISTE PIECES DETACHEES TORCHE SPARE PARTS LIST TORCH ERSATZTEILLISTE SCLAUCHPAKET PIEZAS DE REPUESTO ANTORCHA	CODICE CODE KODE
11	Guaina guidafilo ø0.6-0.8 3m blu Gaine pour fil ø0.6-0.8 3m bleu Wire guide hose ø0.6-0.8 3m blue Drahtführungsseele ø0.6-0.8 3m blue Vaina guia hilo ø0.6-0.8 3m blue	722437
11	Guaina guidafilo ø1.0-1.2 3m rossa Gaine pour fil ø1.0-1.2 3m rouge Wire guide hose ø1.0-1.2 3m red Drahtführungsseele ø1.0-1.2 3m rot Vaina guia hilo ø1.0-1.2 3m roja	722689

REF.	ELENCO PEZZI RICAMBIO TORCIA LISTE PIECES DETACHEES TORCHE SPARE PARTS LIST TORCH ERSATZTEILLISTE SCLAUCHPAKET PIEZAS DE REPUESTO ANTORCHA	CODICE CODE KODE

ELENCO PEZZI DI RICAMBIO
LISTE PIECES DETACHEES
SPARE PARTS LIST
ERSATZTEILLISTE
PIEZAS DE REPUESTO

MAXIMA 270

ELEMENTS LINE

TELWIN

Esploso macchina, Dessin appareil, Machine drawing, Explosions Zeichnung des Geräts, Diseño seccionado maquina.

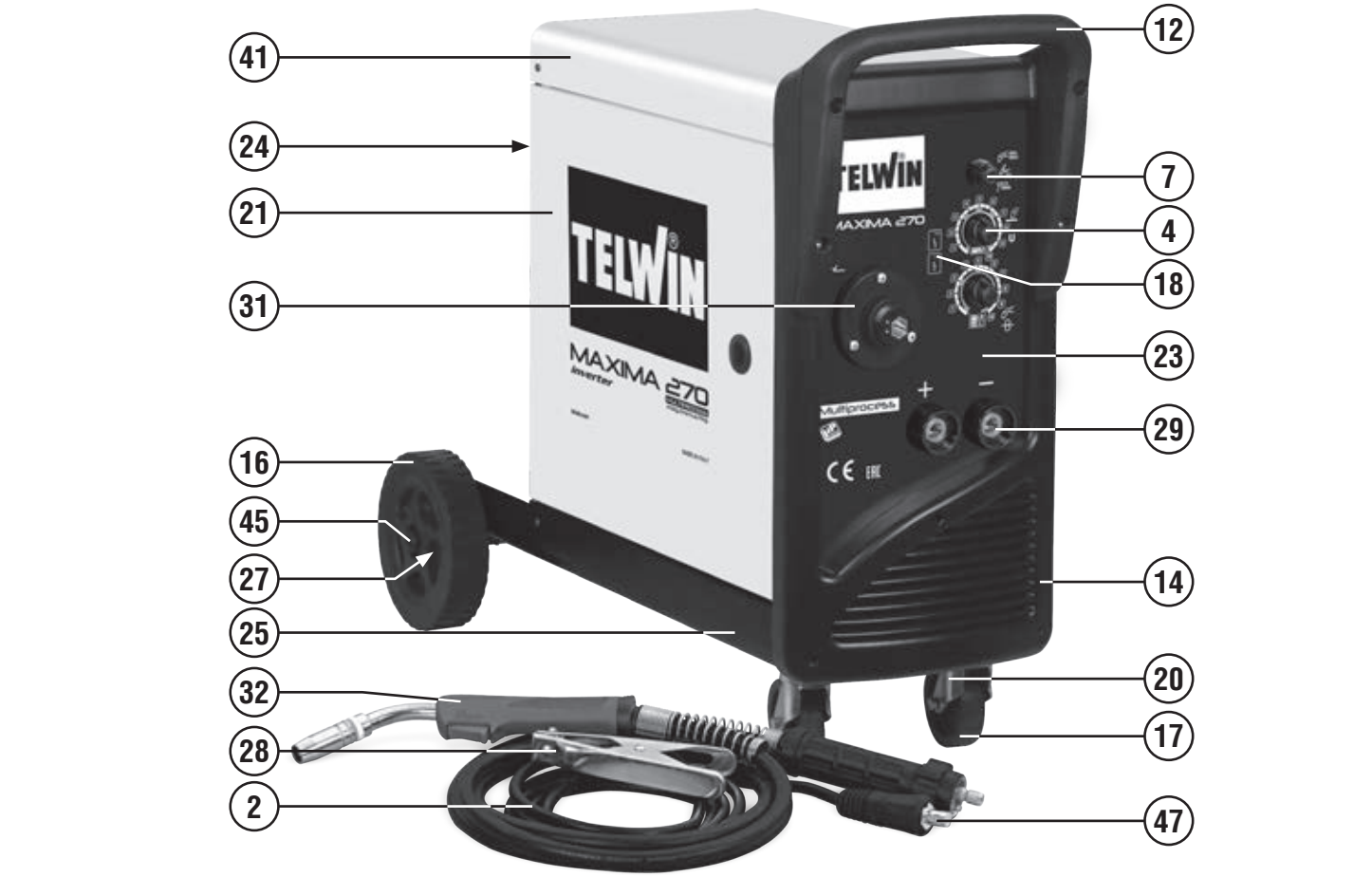

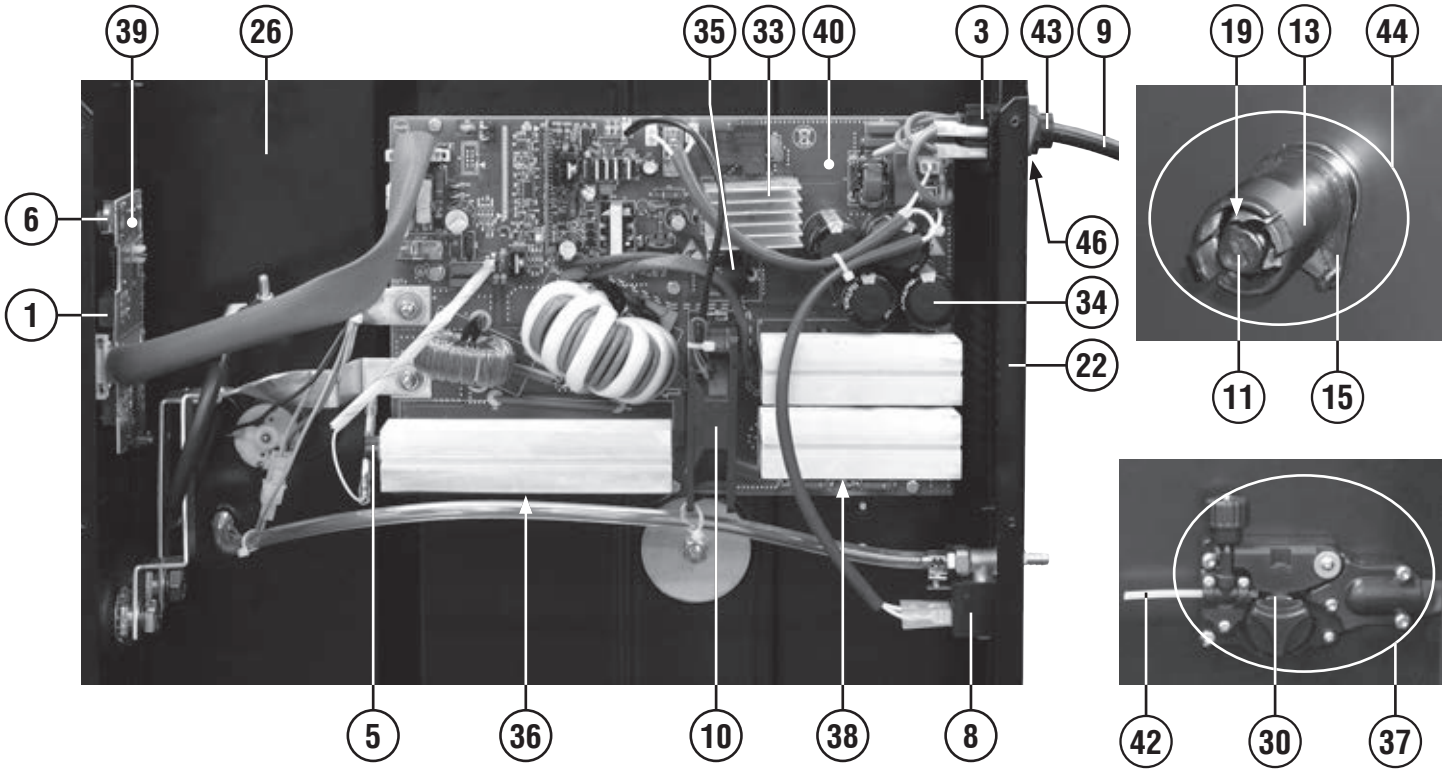

REF.	ELENCO PEZZI DI RICAMBIO PIECES DETACHEES SPARE PARTS LIST ERSATZTEILLISTE PIEZAS DE REPUESTO	CODICE CODE KODE
1	Potenziometro 10k lin. 0.20w 20% Potentiometre 10k lin. 0.20w 20% Potentiometer 10k lin. 0.20w 20% Potentiometer 10k lin. 0.20w 20% Potenciometro 10k lin. 0.20w 20%	111662
2	Cavo Cable Cable Kabel Cable	124887
3	Interruttore Interrupteur Switch Schalter Interruptor	121248
4	Manopola Poigne Knob Griff Manjia	121394
5	Termostato Thermostat Thermostat Thermostat Termostato	121748
6	Commutatore Commutateur Switch Schalter Switch	121775
7	Manopola Poignee Knob Griff Manija	121751
8	Elettrovalvola Electrovanne Electrovalve Elektroventil Electrovalvula	121800
9	Cavo alim. 3g04.00 2.00 M Cable alim. 3g04.00 2.00 M Mains cable 3g04.00 2.00 M Netzkabel 3g04.00 2.00 M Cable alim. 3g04.00 2.00 M	132345
10	Ventilatore Ventilateur Fan Ventilator Ventilador	152294
11	Volantino per aspo Volant pour support bobine Reel handwheel Wicklerhandrad Volant por aspa	312137
12	Manico Poignee Handle Handgriff Manija	312408
13	Distanziale per aspo Entretoise pour support bobine Reel spacer Distanzstueck Espàciador por aspa	321210
14	Cornice Cadre Frame Rahmen Marco	321296
15	Aspo Support bobine Reel Wickler Aspa	322081
16	Ruota fissa Roue fixe Fixed wheel Fixes rad Rueda firme	322201
17	Ruota Roue Wheel Rad Rueda	322245
18	Guida led Guide led Led guide Led führung Guia led	121797
19	Molla per aspo Ressort pour support bobine Reel spring Wicklerfeder Muelle por aspa	452057
20	Supporto girevole + freno Support tournant + frein Swivel support + brake Drehbarerhalter + bremse Sosten giratorio + freno	484688
21	Sportello Guichet Door Tuer Portezuela	617545

REF.	ELENCO PEZZI DI RICAMBIO PIECES DETACHEES SPARE PARTS LIST ERSATZTEILLISTE PIEZAS DE REPUESTO	CODICE CODE KODE
22	Retro Partie arriere Back panel Rückseite Trasera	642768
23	Frontale Partie frontal Front panel Gerätefront Frontal	642767
24	Staffa portabombola Etrier porte-bouteille Bottle-holder bracket Kasten fuer flasche Estribo porta bombona	645673
25	Kit fondo Kit chassis Bottom kit Bodenteil kit Kit fondo	982031
26	Diaframma Diaphragme Diaphragm Diaphragma Diafragma	645843
27	Asse ruote Axe roues Wheels axle Radachse Eje ruedas	681065
28	Toledo 300 pinza di massa 300a Toledo 300 borne de masse 300a Toledo 300 work clamp 300a Toledo 300 masseklemme 300a Toledo 300 borne de masa 300a	712231
29	Presa atlas 50mmq Prise atlas 50mmq Atlas socket 50mmq Atlas steckdose 50mmq Enchufe atlas 50mmq	712036
30	Rullino traino 1r 0,6fe-0,8/0,9fe “c” Galet1r 0,6fe-0,8/0,9fe “c” Feed roll 1r 0,6fe-0,8/0,9fe “c” Vorschubrolle 1r 0,6fe-0,8/0,9fe “c” Roldana 1r 0,6fe-0,8/0,9fe “c”	722019
31	Attacco torcia Attelage torche Torch connection Schlauchpaketanschluss Enganche antorcha	723051
32	Mt25 torcia mig 3m Mt25 torche mig 3m Mt25 mig torch 3m Mt25 mig brenner 3m Mt25 antorcha mig 3m	742183
33	Kit ponte monofase Kit pont monophase Single phase bridge kit Einfasige brücke kit Kit puente monofasico	981581
34	Kit condensatore snap-in Kit condensateur snap-in Condenser kit snap-in Kondensator kit snap-in Kit condensator snap-in	982183
35	Kit mosfet flyback Kit mosfet flyback Mosfet flyback kit Mosfet flyback kit Kit mosfet flyback	982126
36	Kit diodi Kit diodes Diode kit Diode kit Kit diodo	981583
37	Kit motore Kit moteur Motor kit Motorkit Kit motor	981831
38	Kit igbt + diodi Kit igbt + diodes Kit igbt + diodes Kit igbt + dioden Kit igbt + diodos	981582
39	Kit scheda pannello Kit platine frontal Front panel card kit Gerätefrontskarte kit Kit tarjeta frontal	982184
40	Kit scheda completa Kit platine complete Complete control pcb kit Komplette steurungskarte kit Kit tarjeta de controlo completa	982185
41	Kit mantello Kit capot Cover kit Deckel kit Kit panel de cobertura	982186
42	Kit guaina entrata motore Kit gaine entree moteur Gas hose kit Drahtfuehrungsseelekit Kit vaina guiadera alambre	990097

REF.	ELENCO PEZZI DI RICAMBIO PIECES DETACHEES SPARE PARTS LIST ERSATZTEILLISTE PIEZAS DE REPUESTO	CODICE CODE KODE
43	Kit pressacavo + ghiera Kit presse cable + embout Kit cable bushing + ring nut Kit kabelhalter + nutmutter Kit prensa cable + virola	990046
44	Kit aspo Kit support bobine Reel kit Wickler kit Kit aspa	990264
45	Tappo blocca ruote Bouchon ferme roue Wheel locking ring Radsperrestopfen Tapon de bloqueo rueda	322102
46	Copri interruttore Couvre interrupteur Switch cover Schalterdeckel Cubre interruptor	122353
47	Spina atlas 50mmq Fiche atlas 50mmq Atlas plug 50mmq Atlas stecker 50mmq Enchufe atlas 50mmq	712040

Schema elettrico, Schéma électrique, Diagram, Schaltplan, Esquema de conexiones.

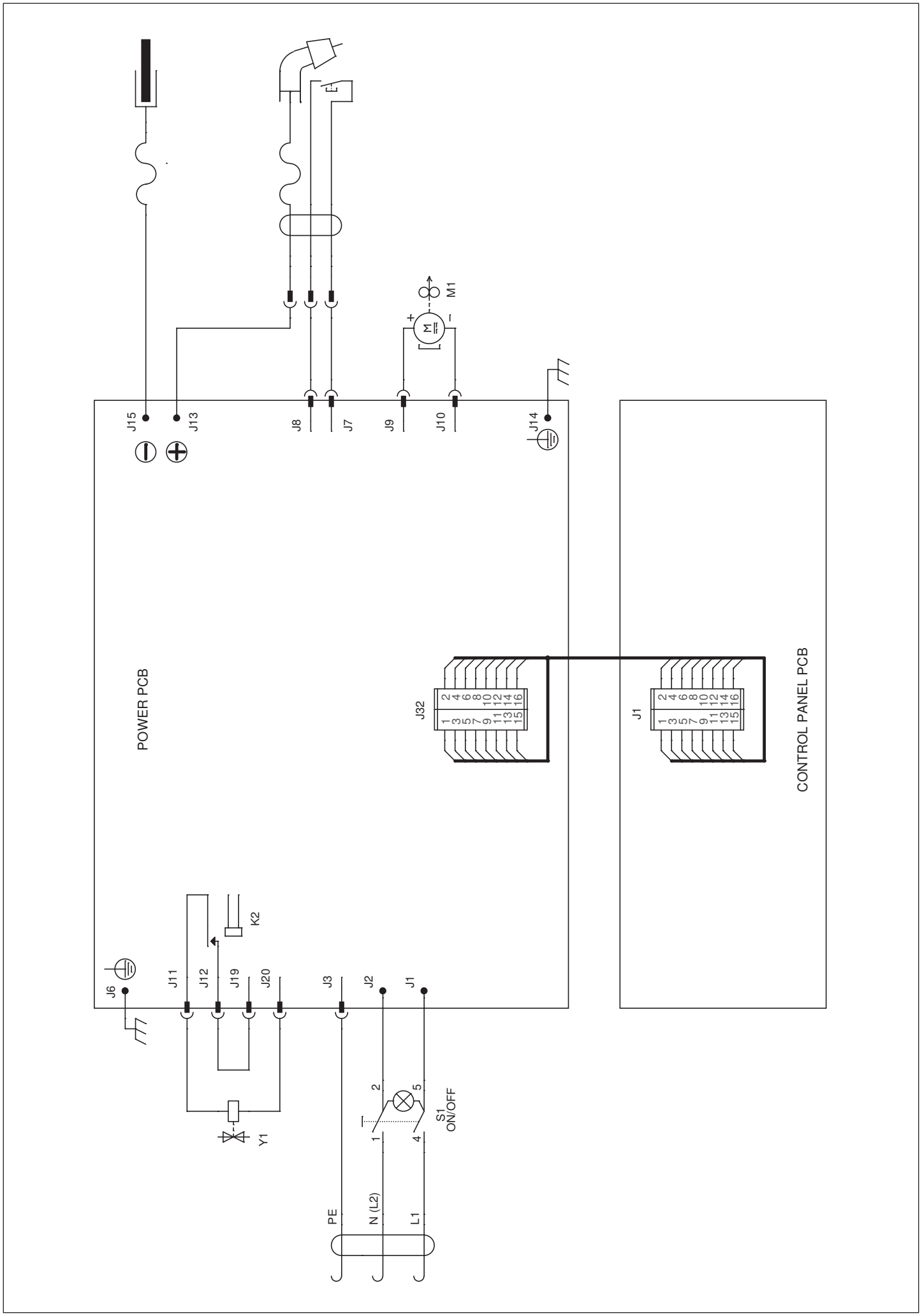

Esploso torcia, Dessin torche, Torch drawing, Schlauchpaket - Explosionszeichnung, Diseño seccionado antorcha.

742183 3m
742184 4m
742185 5m

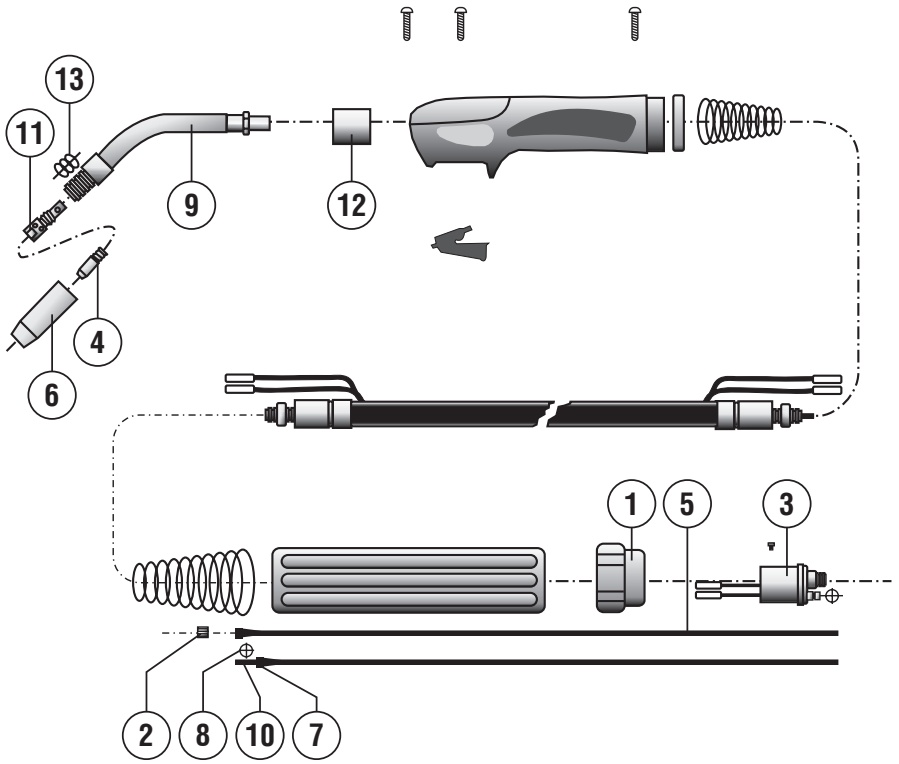

REF.	ELENCO PEZZI RICAMBIO TORCIA LISTE PIECES DETACHEES TORCHE SPARE PARTS LIST TORCH ERSATZTEILLISTE SCLAUCHPAKET PIEZAS DE REPUESTO ANTORCHA	CODICE CODE KODE
1	Ghiera fissaggio Embout fixage Ring nut Nutmutter Virola por fiyacion	722007
2	Dado fissaggio guaina Ecrou fixage gaine Liner nut Befestigungsmutter Dado por fiyacion vaina	722013
3	Corpo torcia Corp de torche Torch assy Brennerskörper Enganche antorcha	722441
4	Tubetto di contatto d. 1,2 Mm fe Tube contact d. 1,2 Mm fe Contact tip d. 1,2 Mm fe Kontaktdüse d. 1,2 Mm fe Tubito de contacto d. 1,2 Mm fe	722682
4	Tubetto di contatto d. 1 Mm fe m6 l=28mm Tube contact d. 1 Mm fe m6 l=28mm Contact tip d. 1 Mm fe m6 l=28mm Kontaktdüse d. 1 Mm fe m6 l=28mm Tubito de contacto d. 1 Mm fe m6 l=28mm	722681
4	Tubetto di contatto d. 0,8 Mm m6 Tube contact d. 0,8 Mm m6 Contact tip d. 0,8 Mm m6 Kontaktdüse d. 0,8 Mm m6 Tubito de contacto d. 0,8 Mm m6	722680
4	Tubetto di contatto d. 1,2 Mm al/flux m6 Tube contact d. 1,2 Mm al/flux m6 Contact tip d. 1,2 Mm al/flux m6 Kontaktdüse d. 1,2 Mm al/flux m6 Tubito de contacto d. 1,2 Mm al/flux m6	722553
4	Tubetto di contatto d. 1 Mm al/flux m6 Tube contact d. 1 Mm al/flux m6 Contact tip d. 1 Mm al/flux m6 Kontaktdüse d. 1 Mm al/flux m6 Tubito de contacto d. 1 Mm al/flux m6	722552
4	Tubetto di contatto d. 0,6 Mm fe Tube contact d. 0,6 Mm fe Contact tip d. 0,6 Mm fe Kontaktdüse d. 0,6 Mm fe Tubito de contacto d. 0,6 Mm fe	722415
5	Guaina guidafilo ø0.6-0.8 3m blu Gaine pour fil ø0.6-0.8 3m bleu Wire guide hose ø0.6-0.8 3m blue Drahtführungsseele ø0.6-0.8 3m blue Vaina guia hilo ø0.6-0.8 3m blue	722437
5	Guaina guidafilo ø1.0-1.2 3m rossa Gaine pour fil ø1.0-1.2 3m rouge Wire guide hose ø1.0-1.2 3m red Drahtführungsseele ø1.0-1.2 3m rot Vaina guia hilo ø1.0-1.2 3m roja	722689
5	Guaina guidafilo ø1.0-1.2 4m al Gaine pour fil ø 1.0-1.2 4m al Wire guide hose ø 1.0-1.2 4m al Drahtführungsseele ø 1.0-1.2 4m al Vaina guia hilo ø 1.0-1.2 4m al	742984

REF.	ELENCO PEZZI RICAMBIO TORCIA LISTE PIECES DETACHEES TORCHE SPARE PARTS LIST TORCH ERSATZTEILLISTE SCLAUCHPAKET PIEZAS DE REPUESTO ANTORCHA	CODICE CODE KODE
6	Ugello cilindrico mt25 Buse cylindrique mt25 Cylindrical nozzle mt25 Zylindrische düse mt25 Inyector cilindrico mt25	722684
6	Ugello conico mt25 Buse conique mt25 Conical nozzle mt25 Konische düse mt25 Inyector conico mt25	722685
6	Ugello testa fine mt25 Buse a tete fine mt25 Thin headed nozzle mt25 Verengte düse mt25 Inyector cabeza fina mt25	722686
6	Ugello per puntatura d. 18 Mm Buse pointage d. 18 Mm Spot welding nozzle d. 18 Mm Punktschweissgasdüse d. 18 Mm Inyector por puntos d. 18 Mm	722687
7	Nipples ferma guaina Nipples serre gaine Wire guide locking nipples Drahtseeleklemmnipples Nipples de bloqueo vaina	722598
8	Anello or Bague or Or ring Or ring Anillo or	722601
8	Anello or Anneau or Or ring Or ring Anillo or	722606
9	Lancia mt25 Lance mt25 Swan neck mt25 Brennerhals mt25 Encorvado mt25	722696
10	Tubetto ferma guaina Tuyau serre gaine Wire guide locking tube Drahtseeleklemmrohr Tubito de bloqueo vaina	722600
11	Diffusore gas mt25 Diffuseur gaz mt25 Gas diffuser mt25 Gasdiffusor mt25 Diffusor gas mt25	722688
12	Isolante corpo torcia Isolant corps de torche Torch connection insulation Brenneranschlussblock isolierteil Aislador cuerpo de antorcha	722693
13	Molla per ugello mt25 Ressort pour buse mt25 Nozzle spring mt25 Düsenfeder mt25 Muelle por inyector mt25	722690

REF.	ELENCO PEZZI RICAMBIO TORCIA LISTE PIECES DETACHEES TORCHE SPARE PARTS LIST TORCH ERSATZTEILLISTE SCLAUCHPAKET PIEZAS DE REPUESTO ANTORCHA	CODICE CODE KODE

ELENCO PEZZI DI RICAMBIO
LISTE PIECES DETACHEES
SPARE PARTS LIST
ERSATZTEILLISTE
PIEZAS DE REPUESTO

INFINITY PLASMA 40

ELEMENTS LINE

TELWIN

Esploso macchina, Dessin appareil, Machine drawing, Explosions Zeichnung des Geräts, Diseño seccionado maquina.

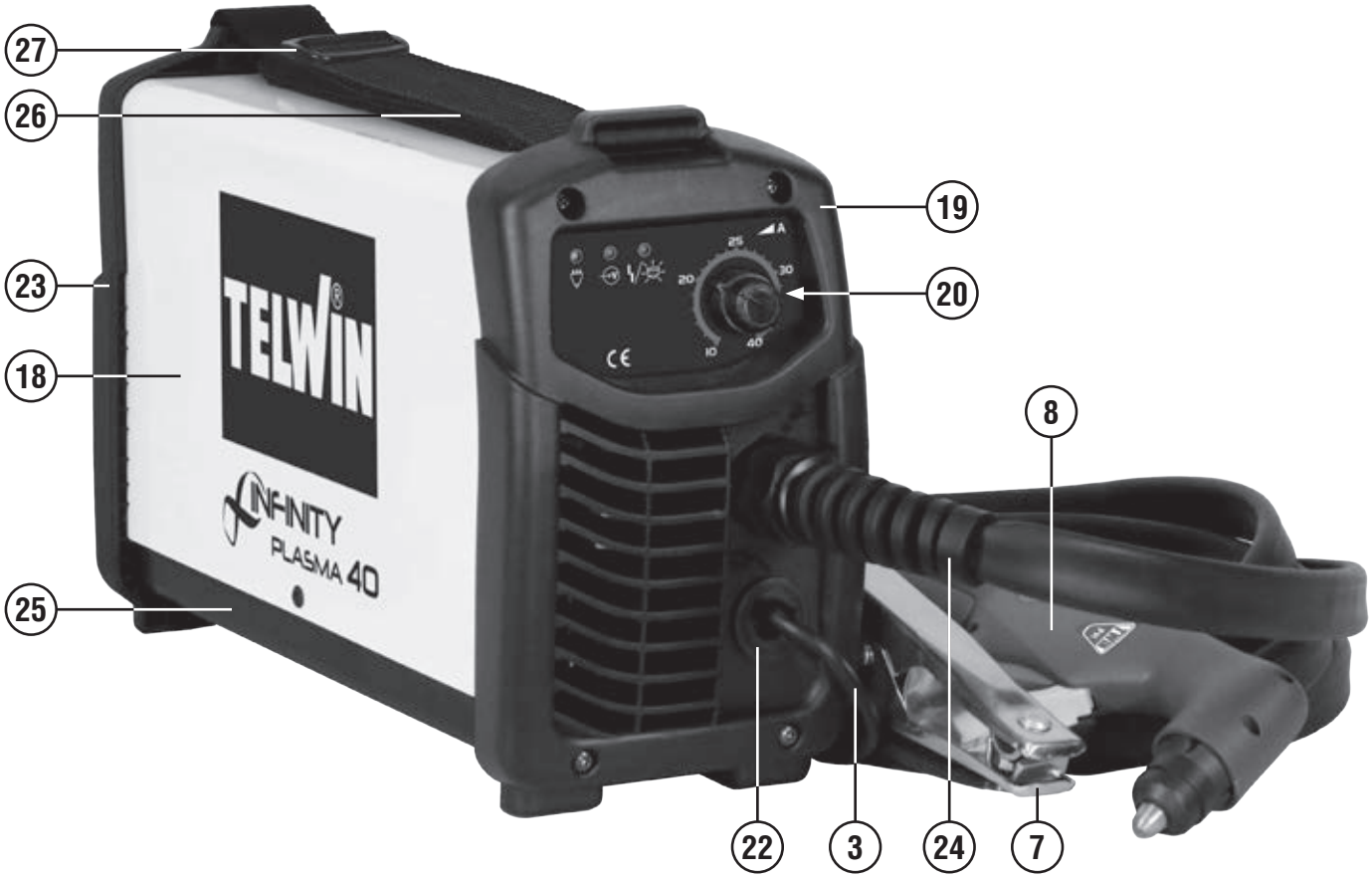

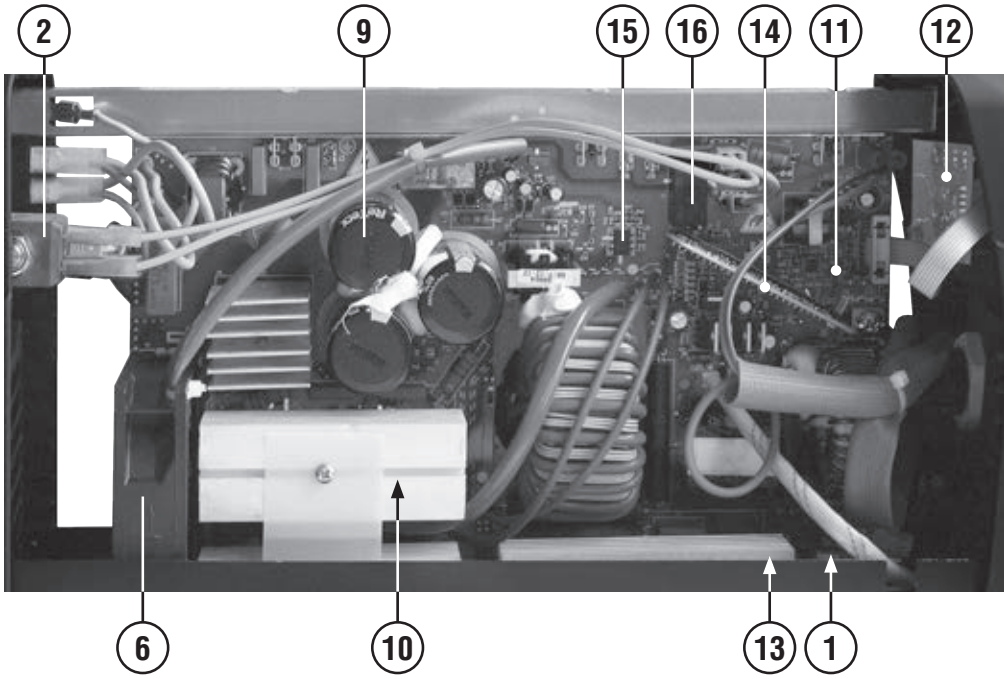



REF.	ELENCO PEZZI DI RICAMBIO PIECES DETACHEES SPARE PARTS LIST ERSATZTEILLISTE PIEZAS DE REPUESTO	CODICE CODE KODE
1	Termostato 10,0a 250v 085° 060° nc Thermostat 10,0a 250v 085° 060° nc Thermal switch 10,0a 250v 085° 060° nc Thermostat 10,0a 250v 085° 060° nc Termostato 10,0a 250v 085° 060° nc	121808
2	Elettrovalvola Electrovanne Electro valve Elektroventil Electrovalvula	122154
3	Cavo 6 mmq 3 m Cable 6 mmq 3 m Cable 6 mmq 3 m Kabel 6 mmq 3 m Cable 6 mmq 3 m	123422
4	Riduttore pressione aria Reducteur de presion air Air pressure regulator Luftdruckminderer Reductor presion aire	125237
5	Cavo alim. 3g1.5 2 M spina schuko Cable alim. 3g1.5 2 M fiche schuko Mains cable 3g1.5 2 M schuko plug Netzkabel 3g1.5 2 M schuko stecker Cable alim. 3g1.5 2 M espina schuko	132155
6	Ventilatore 24vdc 92x 92x25 Ventilateur 24vdc 92x 92x25 Fan 24vdc 92x 92x25 Ventilator 24vdc 92x 92x25 Ventilador 24vdc 92x 92x25	152360
7	Toledo 300 pinza di massa 300a Toledo 300 borne de masse 300a Toledo 300 work clamp 300a Toledo 300 masseklemme 300a Toledo 300 borne de masa 300a	712231
8	Ph torcia plasma 4 m Ph torche plasma 4 m Ph plasma torch 4 m Ph plasma brenner 4 m Ph antorcha plasma 4 m	742685
9	Kit condensatore snap-in Kit condensateur snap-in Condenser kit snap-in Kondensator kit snap-in Kit condensator snap-in	981584
10	Kit igbt + diodi Kit igbt + diodes Kit igbt + diodes Kit igbt + dioden Kit igbt + diodos	981588
11	Kit scheda potenza Kit carte puissance Power board kit Leistungskartekit Kit tarjeta potencia	982231
12	Kit scheda pannello Kit platine frontal Front panel card kit Gerätefrontskarte kit Kit tarjeta frontal	982232
13	Kit diodi 600v Kit diode 600v Diodes kit 600v Diode kit 600v Kit diodos 600v	982237
14	Kit scheda controllo Kit fiche de controle Control pcb kit Kontrollekarte kit Kit tarjeta de controlo	982238
15	Kit componenti alimentatore Kit generateur composants Kit power supply components Kit stromquelle bauteile Kit generador componentes	982248
16	Kit componenti aux. Kit composants aux. Kit aux. Components Kit aux. Bauteile Kit componentes aux.	982249
17	Kit interruttore Kit interrupteur Kit switch Kit schalter Kit interruptor	982253
18	Kit mantello Kit capot Cover kit Deckel kit Kit panel de cobertura	982233
19	Frontale Partie frontal Front panel Gerätefront Frontal	321370
20	Kit potenziometro + manopole Kit potentiometre + poignees Kit potentiometer + knobs Kit potentiometer + knopfs Kit potenciometro + mandos	982259
21	Pressacavo Presse cable Cable bushing Kabelhalter Prensa cable	322112
22	Pressacavo Prensecable Cable bushing Kabelhalter Prensacabel	322138
23	Retro Partie arriere Back panel Rückseite Trasera	321377
24	Kit pressacavo Kit presse-cable Cable- bushing kit Kabelhalter kit Kit prensa cable	980259
25	Kit fondo Kit chassis Bottom kit Bodenteil kit Kit fondo	982234
26	Cinghia Courroie Belt Gurt Correa	322408
27	Fibbia per cinghia Boucle pour courroie Belt buckle Gurtschnalle Hebilla para correa	322065

Schema elettrico, Schéma électrique, Diagram, Schaltplan, Esquema de conexiones.

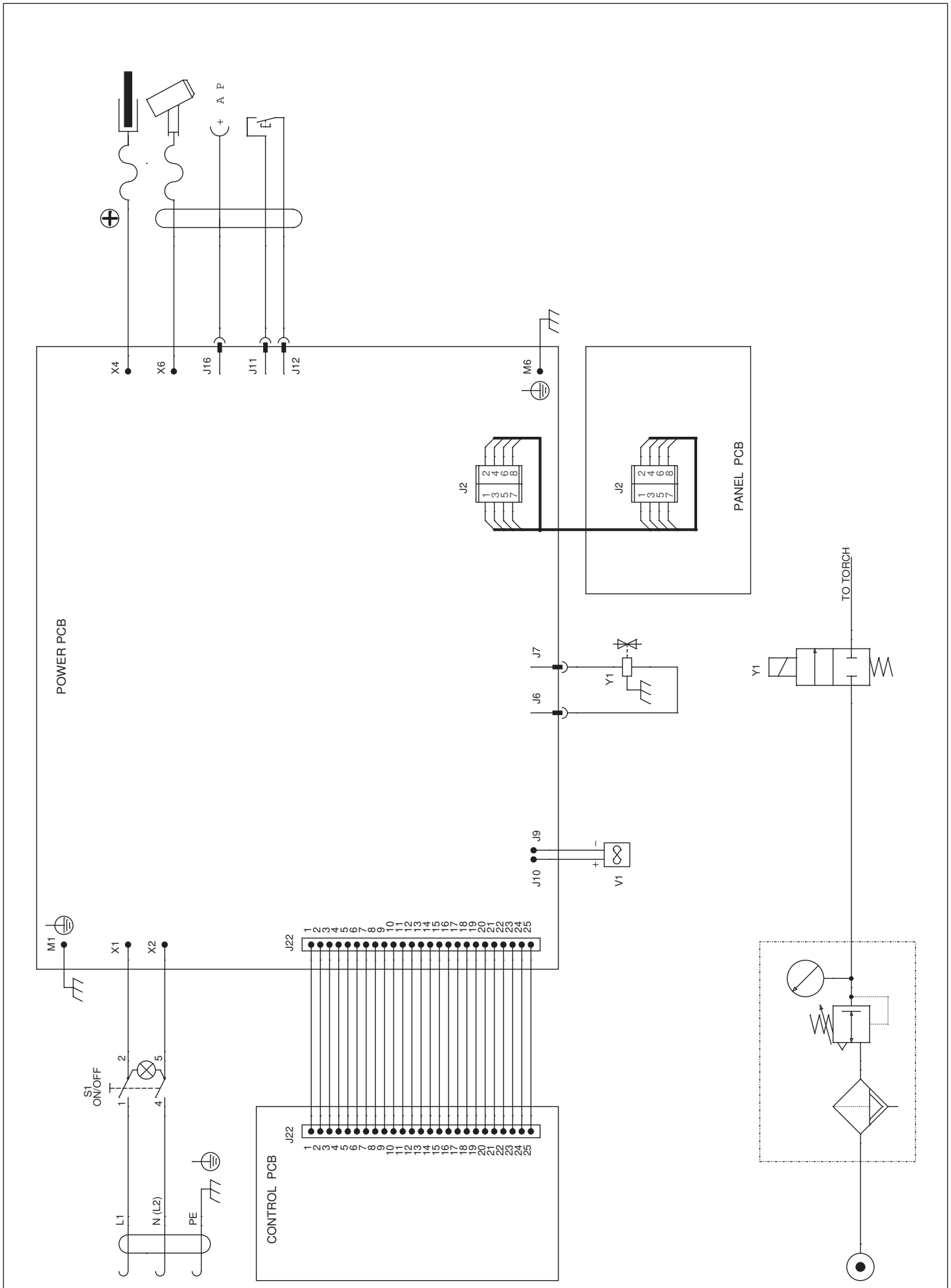

Esploso torcia, Dessin torche, Torch drawing, Schlauchpaket - Explosionszeichnung, Diseño seccionado antorcha.

742685

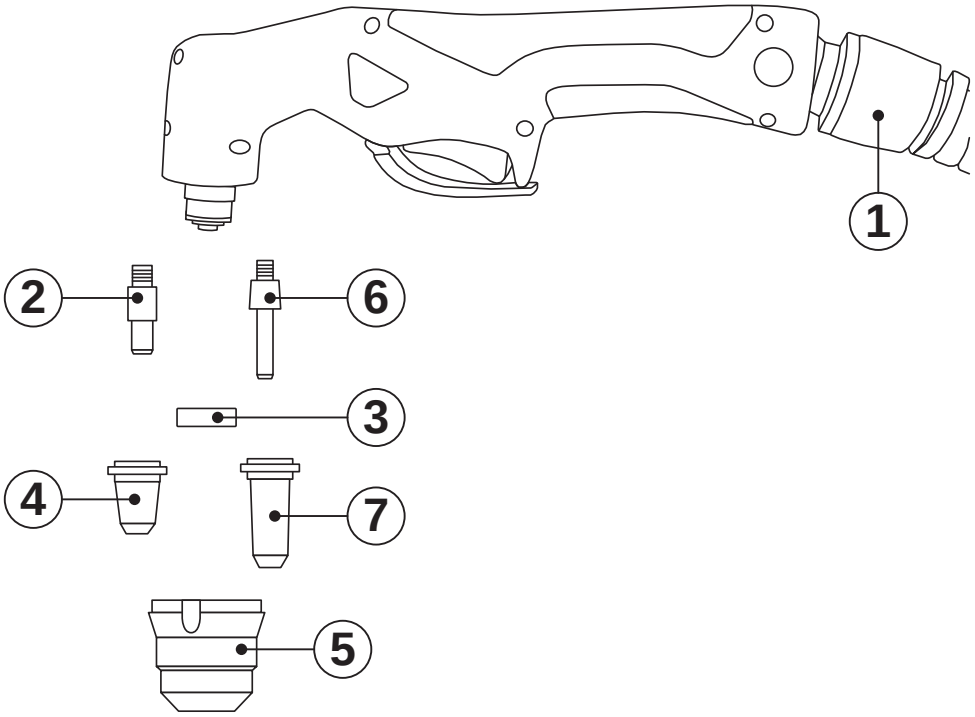

REF.	ELENCO PEZZI RICAMBIO TORCIA LISTE PIECES DETACHEES TORCHE SPARE PARTS LIST TORCH ERSATZTEILLISTE SCLAUCHPAKET PIEZAS DE REPUESTO ANTORCHA	CODICE CODE KODE
1	Passacavo Presse-cable Cable-bushing Kabeldurchgang Prensa cable	321301
2	Kit 5 elettrodi ph-pk Kit 5 electrodes ph-pk Kit 5 electrodes ph-pk Kit 5 elektroden ph-pk Kit 5 electrodos ph-pk	802420
3	Kit 5 diffusori ph-pk Kit 5 diffuseurs ph-pk Kit 5 diffusers ph-pk Kit 5 diffusoren ph-pk Kit 5 difusores ph-pk	802422
4	Kit 5 ugelli ph-pk Kit 5 becs ph-pk Kit 5 nozzles ph-pk Kit 5 düsen ph-pk Kit 5 toberas ph-pk	802423
5	Kit 2 puntali ph Kit 2 embouts ph Kit 2 safety caps ph Kit 2 schutzkappen ph Kit 2 puntales ph	802425
6	Kit 5 elettrodi prolungati ph Kit 5 electrodes prolongees ph Kit 5 long electrodes ph Kit 5 verlängerte elektroden ph Kit 5 electrodos prolongados ph	802428
7	Kit 5 ugelli prolungati ph Kit 5 buses prolongees ph Kit 5 long nozzles ph Kit 5 verlängerte düsen ph Kit 5 inyectores prolungados ph	802429

REF.	ELENCO PEZZI RICAMBIO TORCIA LISTE PIECES DETACHEES TORCHE SPARE PARTS LIST TORCH ERSATZTEILLISTE SCLAUCHPAKET PIEZAS DE REPUESTO ANTORCHA	CODICE CODE KODE

REF.	ELENCO PEZZI RICAMBIO TORCIA LISTE PIECES DETACHEES TORCHE SPARE PARTS LIST TORCH ERSATZTEILLISTE SCLAUCHPAKET PIEZAS DE REPUESTO ANTORCHA	CODICE CODE KODE

ELENCO PEZZI DI RICAMBIO
LISTE PIECES DETACHEES
SPARE PARTS LIST
ERSATZTEILLISTE
PIEZAS DE REPUESTO

TOURING 11
TOURING 15
TOURING 18

ELEMENTS LINE

TELWIN

Esploso macchina, Dessin appareil, Machine drawing, Explosions Zeichnung des Geräts, Diseño seccionado maquina.

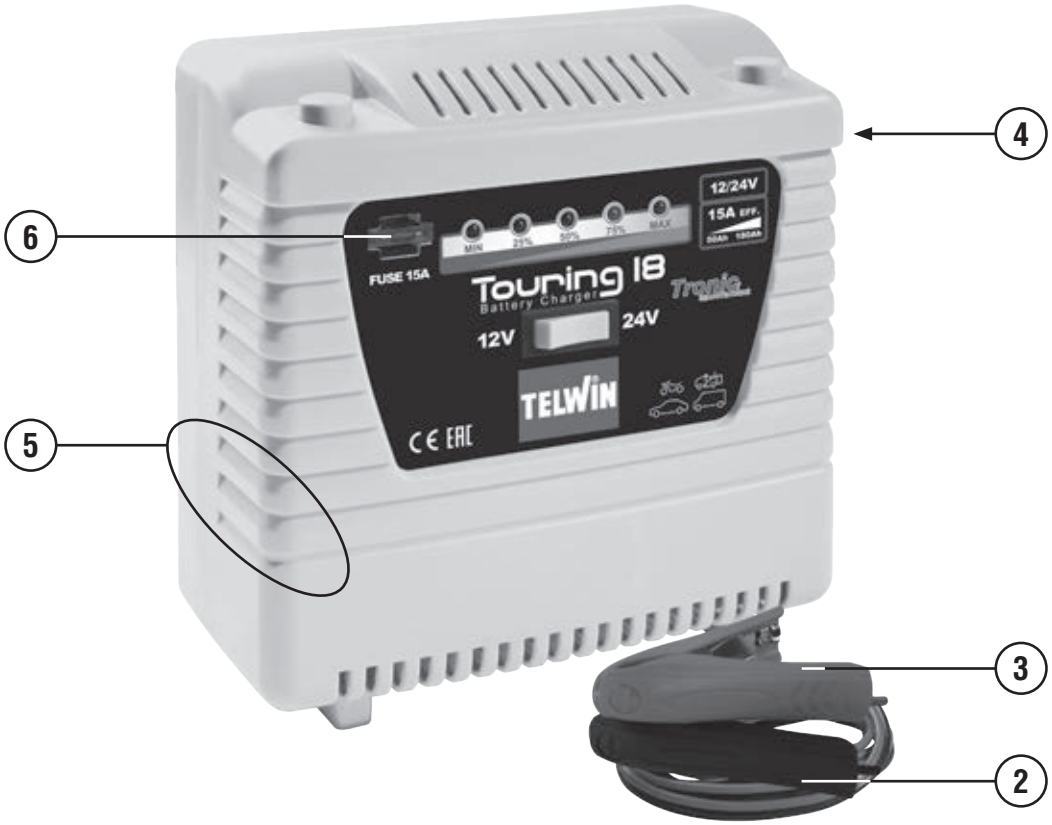

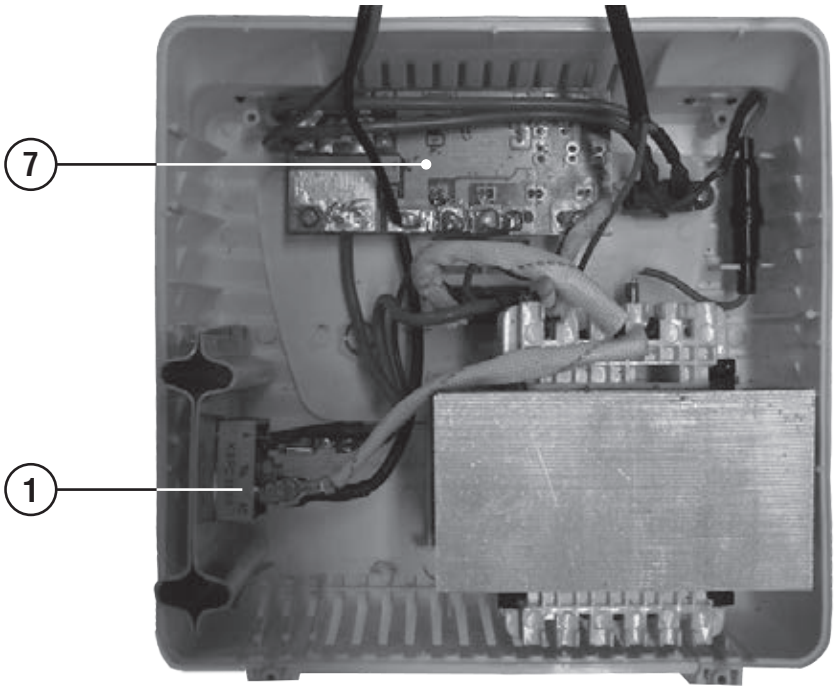

REF.	ELENCO PEZZI DI RICAMBIO PIECES DETACHEES SPARE PARTS LIST ERSATZTEILLISTE PIEZAS DE REPUESTO					TOURING 11	TOURING 15	TOURING 18
		CODICE		CODE		KODE		
1	Raddrizzatore Redresseur Rectifier Gleichrichter Rectificador					112318	112318	112318
2	Cavo positivo 1 mmq 1,2 m Cable positive 1 mmq 1,2 m Positive cable 1 mmq 1,2 m Kabel positive 1 mmq 1,2 m Cable positivo 1 mmq 1,2 m					120765	120765	120765
3	Cavo massa 1 mmq 1,2 m Cable masse 1 mmq 1,2 m Work cable 1 mmq 1,2 m Massekabel 1 mmq 1,2 m Cable masa 1 mmq 1,2 m					120770	120770	120770
4	Cavo alim. 2x0.75 1 M spina i Cable alim. 2x0.75 1 M fiche i Mains cable 2x0.75 1 M i plug Netzkabel 2x0.75 1 M i stecker Cable alim. 2x0.75 1 M espina i					132047	132047	132047
5	Kit gusci Kit calotte Cap kit Kasten kit Kit casquete					321224	321224	321224
6	Fusibili 15a 10 pz Fusibles 15a 10 pcs Fuses 15a 10 pcs Sicherungen 15a 10 stk Fusibles 15a 10 pz					802859	802255	802256
7	Kit scheda Kit fiche Board kit Karte kit Kit tarjeta					981843	981844	981844

Schema elettrico, Schéma électrique, Diagram, Schaltplan, Esquema de conexiones.

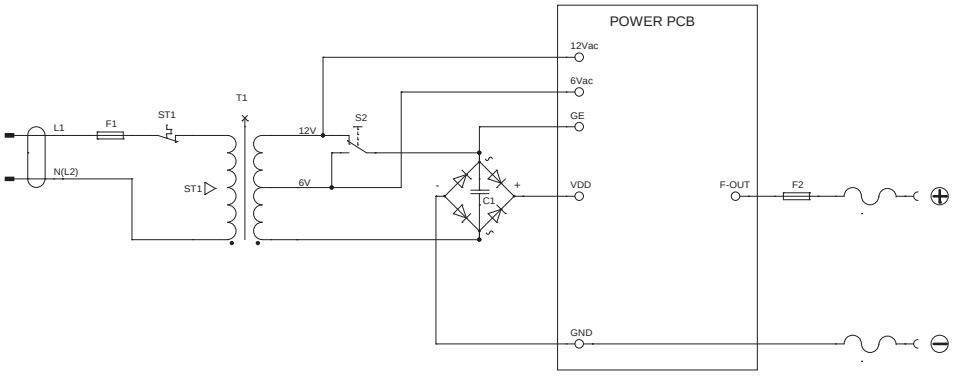

TOURING 11

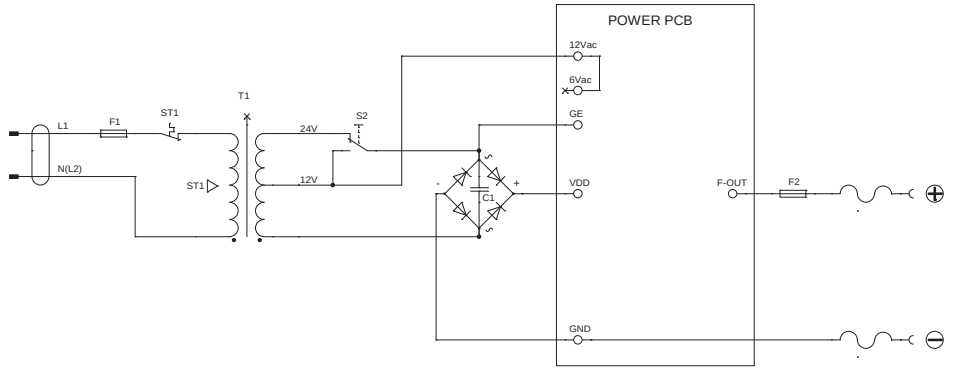

TOURING 15 - 18

ELENCO PEZZI DI RICAMBIO
LISTE PIECES DETACHEES
SPARE PARTS LIST
ERSATZTEILLISTE
PIEZAS DE REPUESTO

ELEMENTS LINE

ALASKA 150 START
ALASKA 200 START

TELWIN

Esploso macchina, Dessin appareil, Machine drawing, Explosions Zeichnung des Geräts, Diseño seccionado maquina.

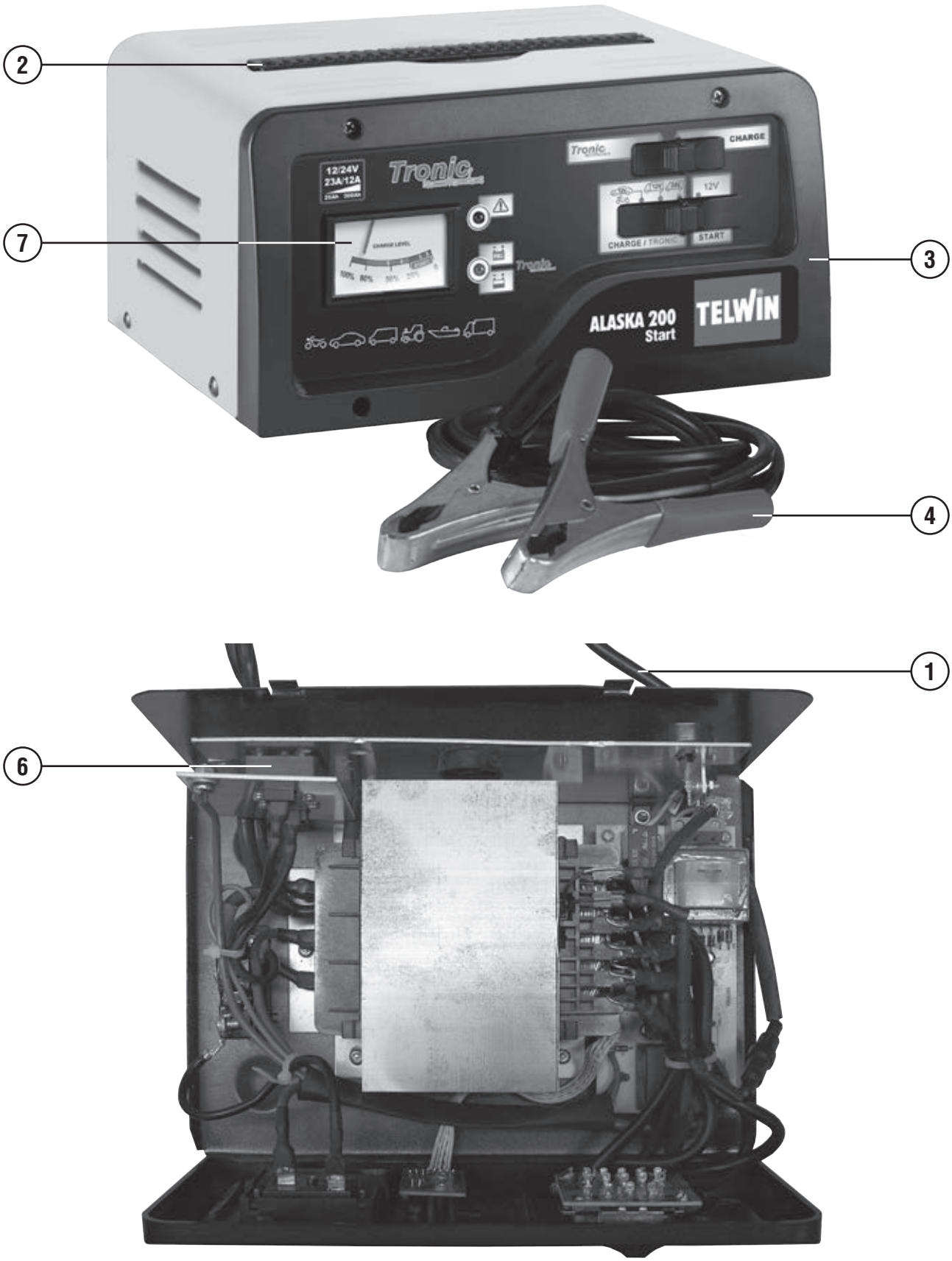

REF.	ELENCO PEZZI DI RICAMBIO PIECES DETACHEES SPARE PARTS LIST ERSATZTEILLISTE PIEZAS DE REPUESTO	ALASKA 150 START CODICE	ALASKA 200 START CODE KODE
1	Cavo alimentazione 1,5 m Cable alimentation 1,5 m Mains cable 1,5 m Netzkabel 1,5 m Cable alimentador 1,5 m	132398	132398
2	Maniglia Poignee Knob Griff Manija	321250	321250
3	Cornice Cadre Frame Rahmen Marco	321251	321251
4	Ass.Cavi p./N. 1x005 l=1,80m + pressac. Ass.Cables p/n 1x005 l=1,80m +presse-c. Cables set p/n 1x005 l=1,80m + ca.Bush. Kabel set 1x005 l=1,80m + k.Halter Ass.Cables p/n 1x005 l=1,80m +prensa c.	713290	713292

REF.	ELENCO PEZZI DI RICAMBIO PIECES DETACHEES SPARE PARTS LIST ERSATZTEILLISTE PIEZAS DE REPUESTO	ALASKA 150 START CODICE	ALASKA 200 START CODE KODE
6	Raddrizzatore Redresseur Rectifier Gleichrichter Redresseur	111477	111478
7	Amperometro Amperemetre Ammeter Amperemeter Amperemeter	152309	152310

Schema elettrico, Schéma électrique, Diagram, Schaltplan, Esquema de conexiones.

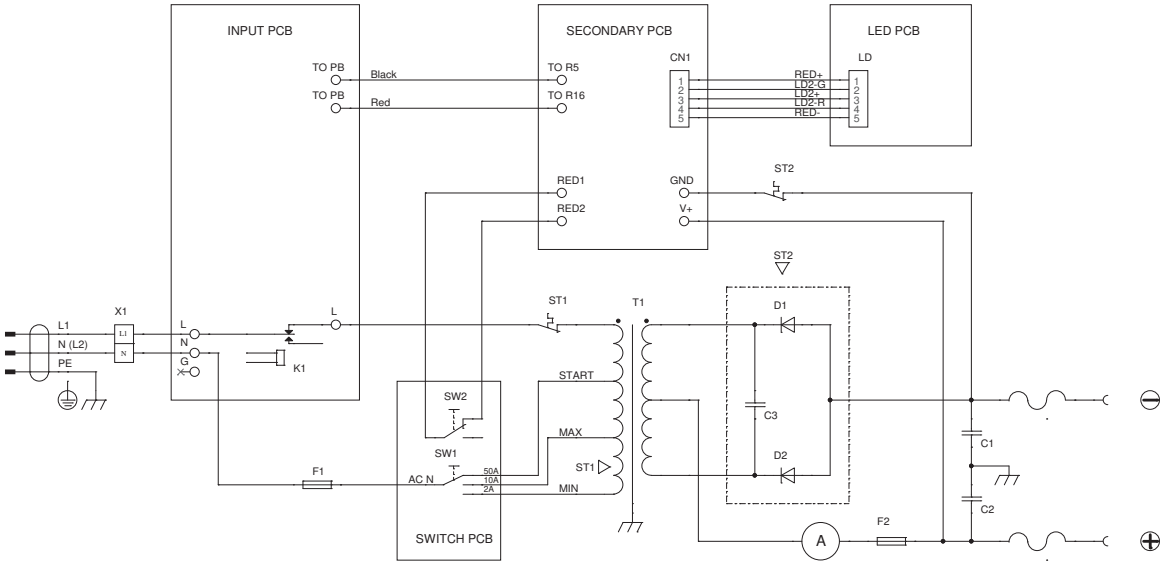

ALASKA 150 START

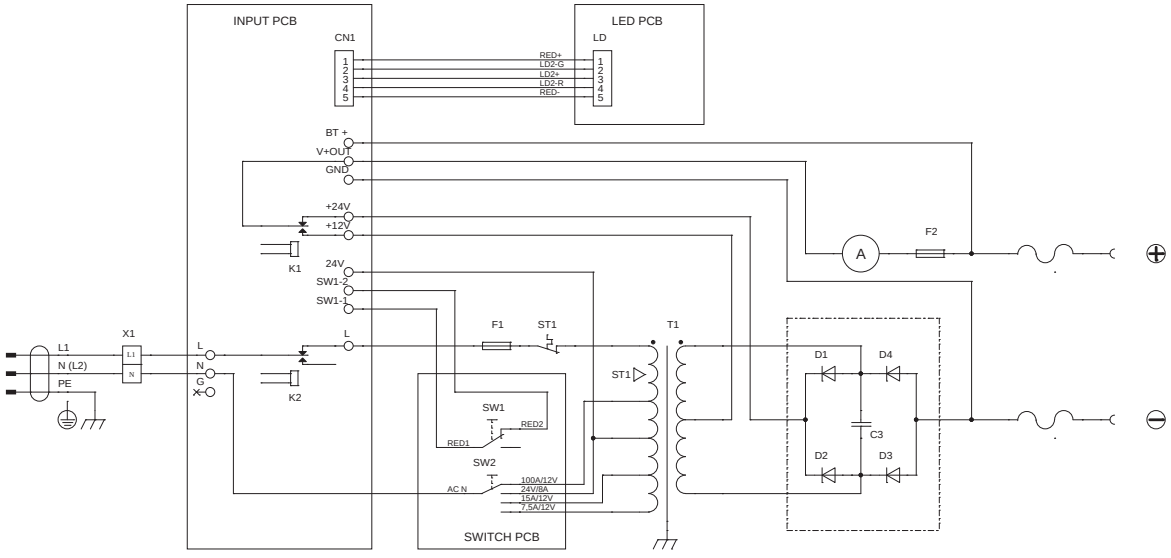

ALASKA 200 START

ELENCO PEZZI DI RICAMBIO
LISTE PIECES DETACHEES
SPARE PARTS LIST
ERSATZTEILLISTE
PIEZAS DE REPUESTO

SPRINTER 3000 START
SPRINTER 4000 START

ELEMENTS LINE

TELWIN

Esploso macchina, Dessin appareil, Machine drawing, Explosions Zeichnung des Geräts, Diseño seccionado maquina.

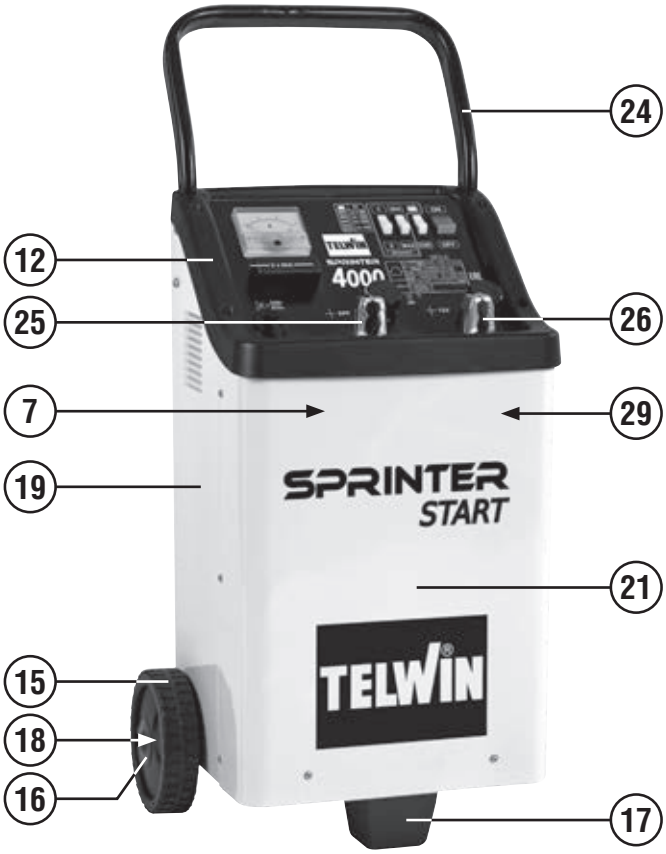

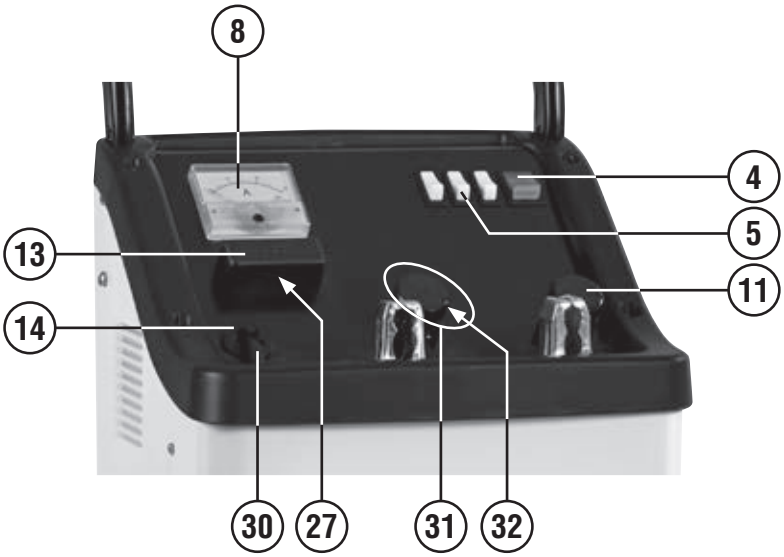

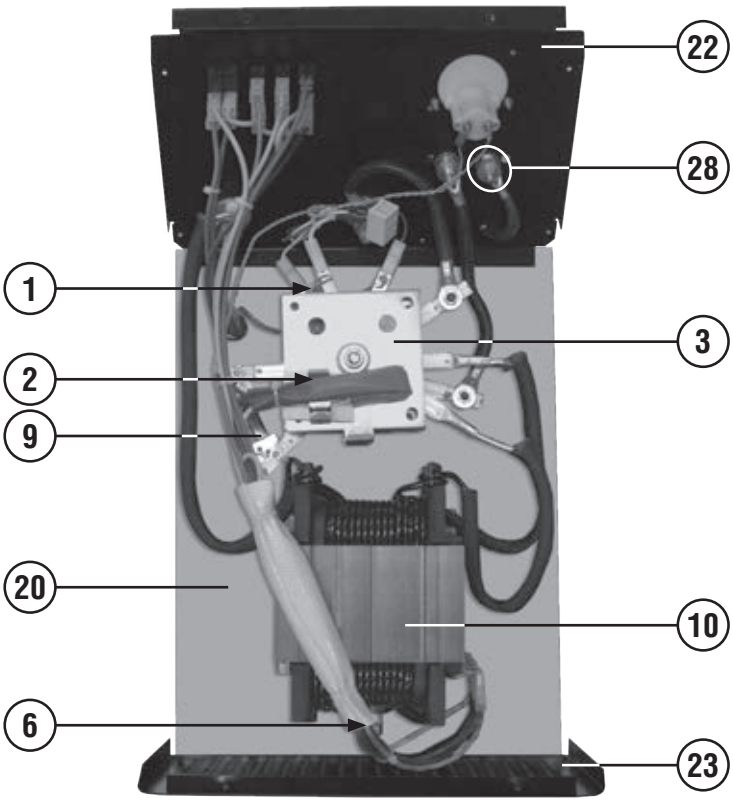

REF.	ELENCO PEZZI DI RICAMBIO PIECES DETACHEES SPARE PARTS LIST ERSATZTEILLISTE PIEZAS DE REPUESTO	SPRINTER 3000 START	SPRINTER 4000 START
		CODICE CODE KODE	
1	Protezione raddrizzatore Protection redresseur Rectifier protection Gleichrichterschutz Proteccion rectificador	112185	112183
2	Kit termostato Kit thermostat Kit thermostat Thermostat Kit termostato	121714	981967
3	Raddrizzatore monofase Redresseur monophasée Single-phase rectifier Einphasiger gleichrichter Rectificador monofàsico	121668	121667
4	Interruttore Interrupteur Switch Schalter Interruptor	981967	122381
5	Deviatore Gareur Switch Schalter Interruptor	122400	122400
6	Termostato Thermostat Thermostat Thermostat Termostato	122381	122329
7	Cavo alim. 3g2.5 2 M spina schuko Cable alim. 3g2.5 2 M fiche schuko Mains cable 3g2.5 2 M schuko plug Netzkabel 3g2.5 2 M schuko stecker Cable alim. 3g2.5 2 M espina schuko	132416	132009
8	Amperometro Amperemetre Amperometer Amperemeter Amperemetre	152300	152301
9	Shunt amperometrico Shunt d'amperemetre Ammeter shunt Amperemetershunt Shunt amperimetro	152303	152303
10	Trasformatore 230v Transformateur 230v Transformer 230v Transformator 230v Transformador 230v	169880	169879
11	Volantino Volant Handwheel Handrad Volante	312053	312053
12	Cornice Cadre Frame Rahmen Marco	321216	321216
13	Cuffia per fusibili Couvre fusibles Fuse cover Kasten fuer sicherungen Cubrefusibile	322051	322051
14	Pressacavo Presse-cable Cable-bushing Kabelhalter Prensa cable	312475	312475
15	Ruota Roue Wheel Rad Rueda	322193	322193
16	Tappo blocca ruota Bouchon ferme roue Wheel locking ring Radsperrestopfen Tapon de bloqueo rueda	322223	322223
17	Piedino Embout Foot Fuss Pie	322803	322803

REF.	ELENCO PEZZI DI RICAMBIO PIECES DETACHEES SPARE PARTS LIST ERSATZTEILLISTE PIEZAS DE REPUESTO	SPRINTER 3000 START	SPRINTER 4000 START
		CODICE CODE KODE	
18	Asse ruote Axe roues Wheels axle Radachse Eje ruedas	484748	484748
19	Retro Partie arriere Back panel Rueckseite Trasera	617014	617014
20	Diaframma Diaphragme Diaphragm Diaphragma Diafragma	617015	617015
21	Frontale Partie frontal Front panel Gerätefront Frontal	617549	617549
22	Cruscotto Tableau Dashboard Schaltbrett Cuadro	642834	642835
23	Fondo Chassis Bottom Bodenteil Fondo	645721	645721
24	Manico Poignee Handle Handgriff Manija	645723	645723
25	Colorado 150b pinza di massa 150a Colorado 150b pince de masse 150a Colorado 150b work clamp 150a Colorado 150b masseklemme 150a Colorado 150b pinza de masa 150a	712001	712001
26	Colorado 150r pinza positivo 150a Colorado 150r pince positiv 150a Colorado 150r positive clamp 150a Colorado 150r positive zange 150a Colorado 150r pinza positivo 150a	712002	712002
27	Fusibili lamella 80a 20 pz Fusibles 80a 20 pcs Fuses 80a 20 pcs Sicherungen 80a 20 stk Fusibles 80a 20 pz	802259	802260
28	Morsetto per fusibile Borne pour fusible Fuse holder Sicherungshalter Bocadillo para fusible	980036	980036
29	Cavo 16mmq 2m- positivo Cable 16mmq 2m- positive Cable 16mmq 2m- positive Kabel 16mmq 2m- positive Cable 16mmq 2m- positivo	980317	980318
30	Cavo 16mmq 2m- massa Cable 16mmq 2m- masse Cable 16mmq 2m- earth Kabel 16mmq 2m- masse Cable 16mmq 2m- mase	980365	980366
31	Kit morsetto completo d.33mm Kit borne complete d.33mm Complete terminal kit d.33mm Komplet kabelklemme kit d.33mm Kit borne completo d.33mm	990162	990162
32	Kit coppia rondelle isolanti Kit rondelles isolantes Insulating washers kit Isolierscheibekit Kit arandelas asladoras	990163	990163

Schema elettrico, Schéma électrique, Diagram, Schaltplan, Esquema de conexiones.

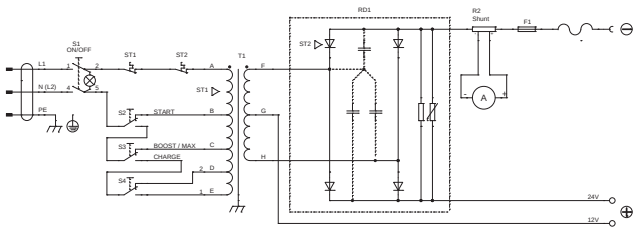

SPRINTER 3000 START

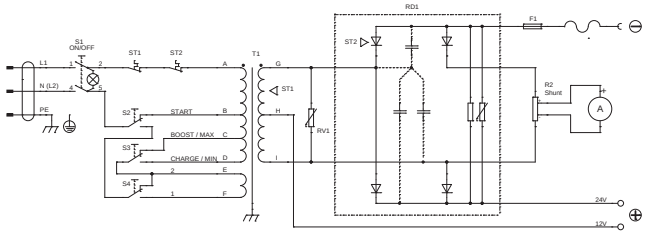

SPRINTER 4000 START

ELENCO PEZZI DI RICAMBIO
LISTE PIECES DETACHEES
SPARE PARTS LIST
ERSATZTEILLISTE
PIEZAS DE REPUESTO

SPRINTER 6000 START

Esploso macchina, Dessin appareil, Machine drawing, Explosions Zeichnung des Geräts, Diseño seccionado maquina.

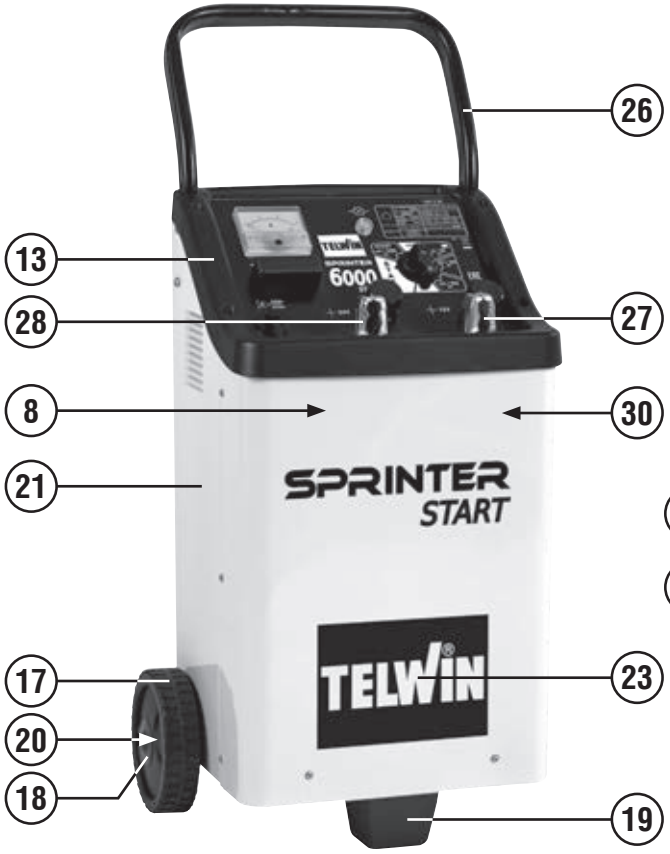

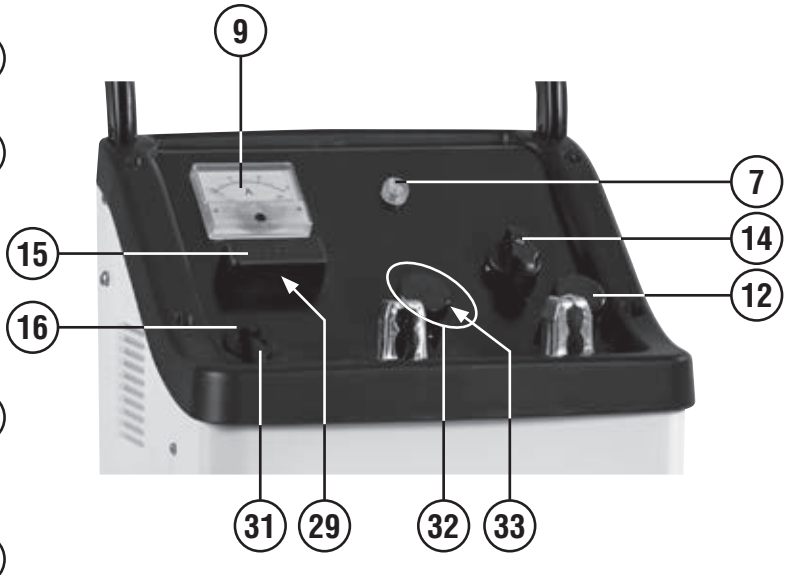

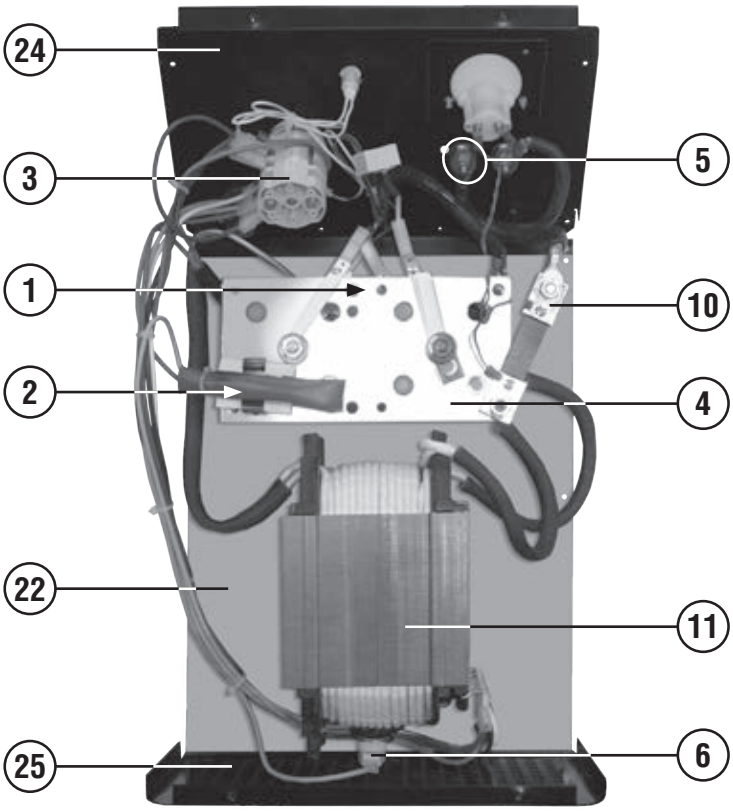

REF.	ELENCO PEZZI DI RICAMBIO PIECES DETACHEES SPARE PARTS LIST ERSATZTEILLISTE PIEZAS DE REPUESTO	CODICE CODE KODE
1	Protezione raddrizzatore Protection redresseur Rectifier protection Gleichrichterschutz Proteccion rectificador	112183
2	Kit termostato Kit thermostat Kit thermostat Thermostat Kit termostato	981967
3	Commutatore Commutateur Switch Schalter Conmutador	121504
4	Raddrizzatore monofase 25a 400v Redresseur monophasée 25a 400v Single-phase rectifier 25a 400v Einphasiger gleichrichter 25a 400v Rectificador monofàsico 25a 400v	121654
5	Kit morsetto per fusibile Kit borne pour fuse Fuse clamp kit Sicherungsklemme kit Kit borne fusible	990595
6	Termostato Thermostat Thermostat Thermostat Termostato	122329
7	Lampada Temoin lumineux Pilot lamp Kontrollampe Lampara	122546
8	Cavo alim. 3g2.5 2 M Cable alim. 3g2.5 2 M Mains cable 3g2.5 2 M Netzkabel 3g2.5 2 M Cable alim. 3g2.5 2 M	132064
9	Amperometro Amperemetre Amperometer Amperemeter Amperemetre	152302
10	Shunt amperometrico Shunt d'amperemetre Ammeter shunt Amperemetershunt Shunt amperimetro	152304
11	Trasformatore 230v Transformateur 230v Transformer 230v Transformator 230v Transformador 230v	169878
12	Volantino Volant Handwheel Handrad Volante	312053

REF.	ELENCO PEZZI DI RICAMBIO PIECES DETACHEES SPARE PARTS LIST ERSATZTEILLISTE PIEZAS DE REPUESTO	CODICE CODE KODE
13	Cornice Cadre Frame Rahmen Marco	321216
14	Manopola Poignee Knob Griff Manija	321230
15	Cuffia per fusibili Couvre fusibles Fuse cover Kasten fuer sicherungen Cubrefusibile	322051
16	Pressacavo Presse-cable Cable-bushing Kabelhalter Prensa cable	312475
17	Ruota Roue Wheel Rad Rueda	322193
18	Tappo blocca ruota Bouchon ferme roue Wheel locking ring Radsperrestopfen Tapon de bloqueo rueda	322223
19	Piedino Embout Foot Fuss Pie	322803
20	Asse ruote Axe roues Wheels axle Radachse Eje ruedas	484748
21	Retro Partie arriere Back panel Rueckseite Trasera	617014
22	Diaframma Diaphragme Diaphragm Diaphragma Diafragma	617015
23	Frontale Partie frontal Front panel Gerätefront Frontal	617549
24	Cruscotto Tableau Dashboard Schaltbrett Cuadro	642836

REF.	ELENCO PEZZI DI RICAMBIO PIECES DETACHEES SPARE PARTS LIST ERSATZTEILLISTE PIEZAS DE REPUESTO	CODICE CODE KODE
25	Fondo Chassis Bottom Bodenteil Fondo	645721
26	Manico Poignee Handle Handgriff Manija	645723
27	Colorado 150b pinza di massa 150a Colorado 150b pince de masse 150a Colorado 150b work clamp 150a Colorado 150b masseklemme 150a Colorado 150b pinza de masa 150a	712001
28	Colorado 150r pinza positivo 150a Colorado 150r pince positiv 150a Colorado 150r positive clamp 150a Colorado 150r positive zange 150a Colorado 150r pinza positivo 150a	712002
29	Fusibili lamella 100a 20 pz Fusibles 100a 20 pcs Fuses 100a 20 pcs Sicherungen 100a 20 stk Fusibles 100a 20 pz	802029
30	Cavo 16mmq 2m- positivo Cable 16mmq 2m- positive Cable 16mmq 2m- positive Kabel 16mmq 2m- positive Cable 16mmq 2m- positivo	980318
31	Kit cavo 16mmq 2m Kit cable 16mmq 2m Cable kit 16mmq 2m Kabel kit 16mmq 2m Kit cable 16mmq 2m	981575
32	Kit morsetto completo d.33mm Kit borne complete d.33mm Complete terminal kit d.33mm Komplet kabelklemme kit d.33mm Kit borne completo d.33mm	990162
33	Kit coppia rondelle isolanti Kit rondelles isolantes Insulating washers kit Isolierscheibekit Kit arandelas asladoras	990163

Schema elettrico, Schéma électrique, Diagram, Schaltplan, Esquema de conexiones.

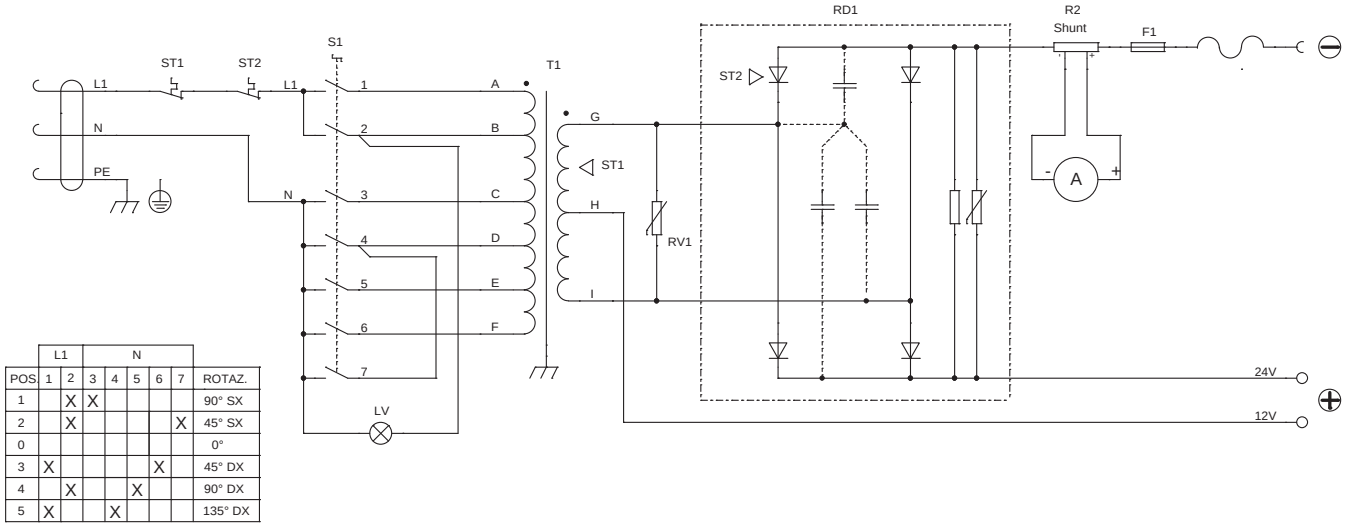

POS.	L1		N					ROTAZ.
	1	2	3	4	5	6	7	
1		X	X					90° SX
2		X					X	45° SX
0								0°
3	X					X		45° DX
4		X			X			90° DX
5	X			X				135° DX

ELENCO PEZZI DI RICAMBIO
LISTE PIECES DETACHEES
SPARE PARTS LIST
ERSATZTEILLISTE
PIEZAS DE REPUESTO

FORCE 125

Esploso macchina, Dessin appareil, Machine drawing, Explosions Zeichnung des Geräts, Diseño seccionado maquina.



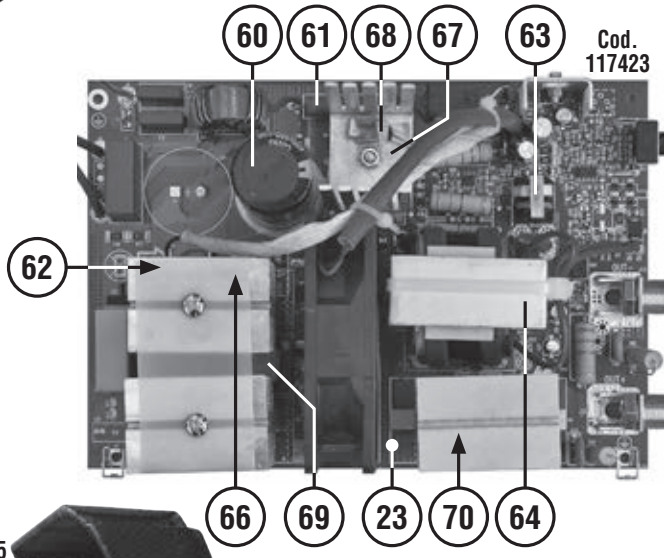

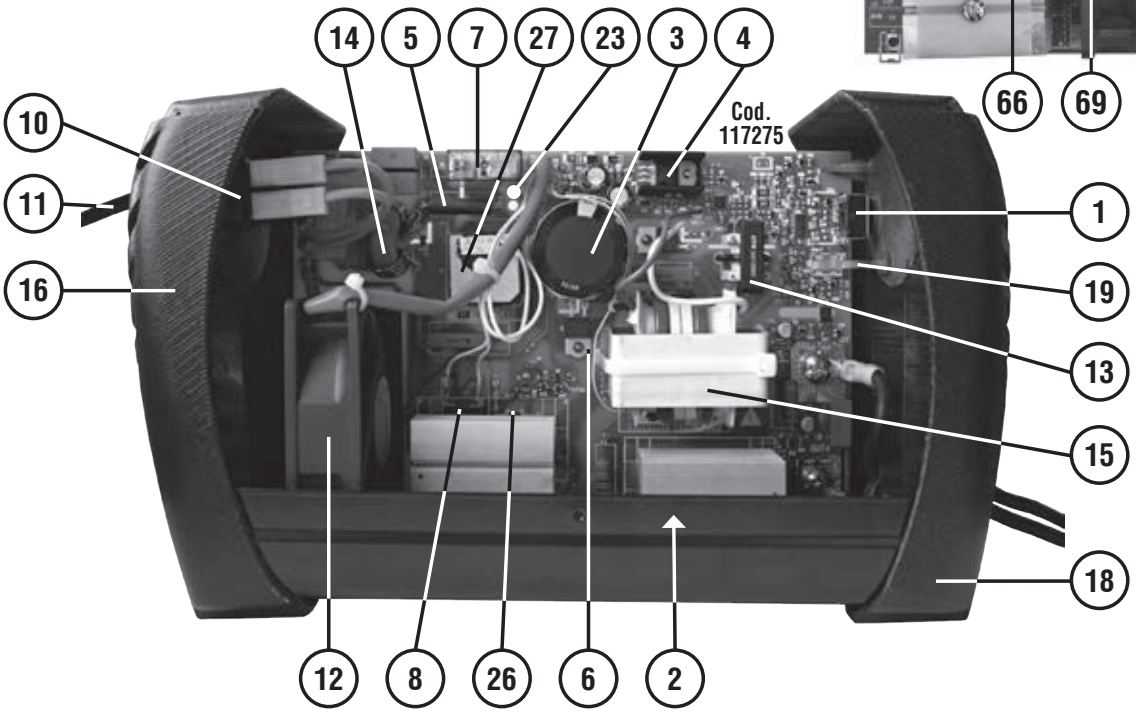

REF.	ELENCO PEZZI DI RICAMBIO PIECES DETACHEES SPARE PARTS LIST ERSATZTEILLISTE PIEZAS DE REPUESTO	CODICE CODE KODE
1	Pot. Carb. 10k lin. 0.20w 20% Pot. Carb. 10k lin. 0.20w 20% Pot. Carb. 10k lin. 0.20w 20% Pot. Carb. 10k lin. 0.20w 20% Pot. Carb. 10k lin. 0.20w 20%	112017
2	Diodo Diode Diode Diode Diodo	112948
3	Condensatore Condensateur Capacitor Kondensator Condensador	113122
4	Transistor 100v Transistor 100v Transistor 100v Transistor 100v Transistor 100v	116171
5	Resistenza Resistance Resistance Widerstand Resistencia	116328
6	Diodo Diode Diode Diode Diodo	116694
7	Rele' 24vdc 17ma 250v 16a 1no Relais 24vdc 17ma 250v 16a 1no Relais 24vdc 17ma 250v 16a 1no Relais 24vdc 17ma 250v 16a 1no Conectador 24vdc 17ma 250v 16a 1no	116738
8	Termostato 10,0a 250v 085° 063° nc Thermostat 10,0a 250v 085° 063° nc Thermal switch 10,0a 250v 085° 063° nc Thermostat 10,0a 250v 085° 063° nc Termostato 10,0a 250v 085° 063° nc	121249
9	Manopola Poignee Knob Griff Manija	121395
10	Interruttore Interrupteur Switch Schalter Interruptor	122381
11	Cavo alim. 3g1.5 2 M spina schuko Cable alim. 3g1.5 2 M fiche schuko Mains cable 3g1.5 2 M schuko plug Netzkabel 3g1.5 2 M schuko stecker Cable alim. 3g1.5 2 M espina schuko	132155
12	Ventilatore 24vdc 92x 92x25 Ventilateur 24vdc 92x 92x25 Fan 24vdc 92x 92x25 Ventilator 24vdc 92x 92x25 Ventilador 24vdc 92x 92x25	152901
13	Ta 1/100 Ta 1/100 Ta 1/100 Ta 1/100 Ta 1/100	152266
14	Induttanza filtro Inductance filter Filter inductance Filter drossel Induccion filtro	164741
15	Trasformatore potenza Transformateur de puissance Power trafo Leistungstransformer Transformador de potencia	169638
16	Retro Partie arriere Back panel Rueckseite Trasera	322894
17	Manico Poignee Handle Handgriff Manija	322895
18	Frontale Partie arriere Front panel Stimbrett Frontal	322896
19	Guida luce Guide Guide Führung Guia	322898
20	Dallas 300 pinza portaelettrodi 300a Dallas 300 pince porte-electrodes 300a Dallas 300 electrode holder 300a Dallas 300 elektrodenhalter 300a Dallas 300 pinza portaelectrodos 300a	712260
21	Cavo 6mmq 1.8m pinza di massa-occhiello Cable 6mmq 1.8m pince de masse-cosse Cable 6mmq 1.8m work clamp-eyelet Kabel 6mmq 1.8m massezange-augen Cable 6mmq 1.8m pinca de masa-oiete	713254
22	Cavo 6 mmq 1.8 M occhiello Cable 6 mmq 1.8 M oeillet Cable 6 mmq 1.8 M eyelet Kabel 6 mmq 1.8 M öse Cable 6 mmq 1.8 M ojete	713255
23	Kit scheda completa Kit platine complete Complete control pcb kit Komplette steurungskarte kit Kit tarjeta de controlo completa	982053
24	Kit mantello Kit capot Cover kit Deckelkit Kit panel de cobertura	980783
25	Kit fondo Kit chassis Bottom kit Bodenteil kit Kit fondo	980786
26	Kit igbt + diodo Kit igbt + diode Igbt + diode kit Igbt + diode kit Kit igbt + diodo	980787
27	Kit ponte + termostato Kit pont + thermostat Bridge + thermal switch kit Bruecke + thermostat kit Kit puente + termostato	980801
60	Cap. All.Rad 680u 400v -20%+20% p10 Cap. All.Rad 680u 400v -20%+20% p10 Cap. All.Rad 680u 400v -20%+20% p10 Cap. All.Rad 680u 400v -20%+20% p10 Cap. All.Rad 680u 400v -20%+20% p10	111332
61	Res. Filo 47r 8w 5% Res. Fil 47r 8w 5% Res. Wire 47r 8w 5% Res. Draht 47r 8w 5% Res. Hilo 47r 8w 5%	112048
62	Termostato Thermostat Thermostat Thermostat Termostato	121762
63	Ta 1/300 30a 50khz Ta 1/300 30a 50khz Ta 1/300 30a 50khz Ta 1/300 30a 50khz Ta 1/300 30a 50khz	152312
64	Trasformatore pot.2xe55 1.5:15:15:04 Transformateur puis.2xe55 1.5:15:15:04 Power trafo 2xe55 1.5:15:15:04 Leistungstransfo 2xe55 1.5:15:15:04 Transformador pot.2xe55 1.5:15:15:04	169631
66	Kit igbt + diodi Kit igbt + diodes Kit igbt + diodes Kit igbt + dioden Kit igbt + diodos	982051
67	Kit ponte monofase Kit pont monophase Single phase bridge kit Einfasige brücke kit Kit puente monofasico	981824
68	Termostato Thermostat Thermostat Thermostat Termostato	121761
69	Trasformatore impulsi Transformateur d'impulsions Impulse transformer Impuls-transformator Transformador de impulsos	152316
70	Kit diodi Kit diodes Diode kit Diode kit Kit diodo	981591

Schema elettrico, Schéma électrique, Diagram, Schaltplan, Esquema de conexiones.

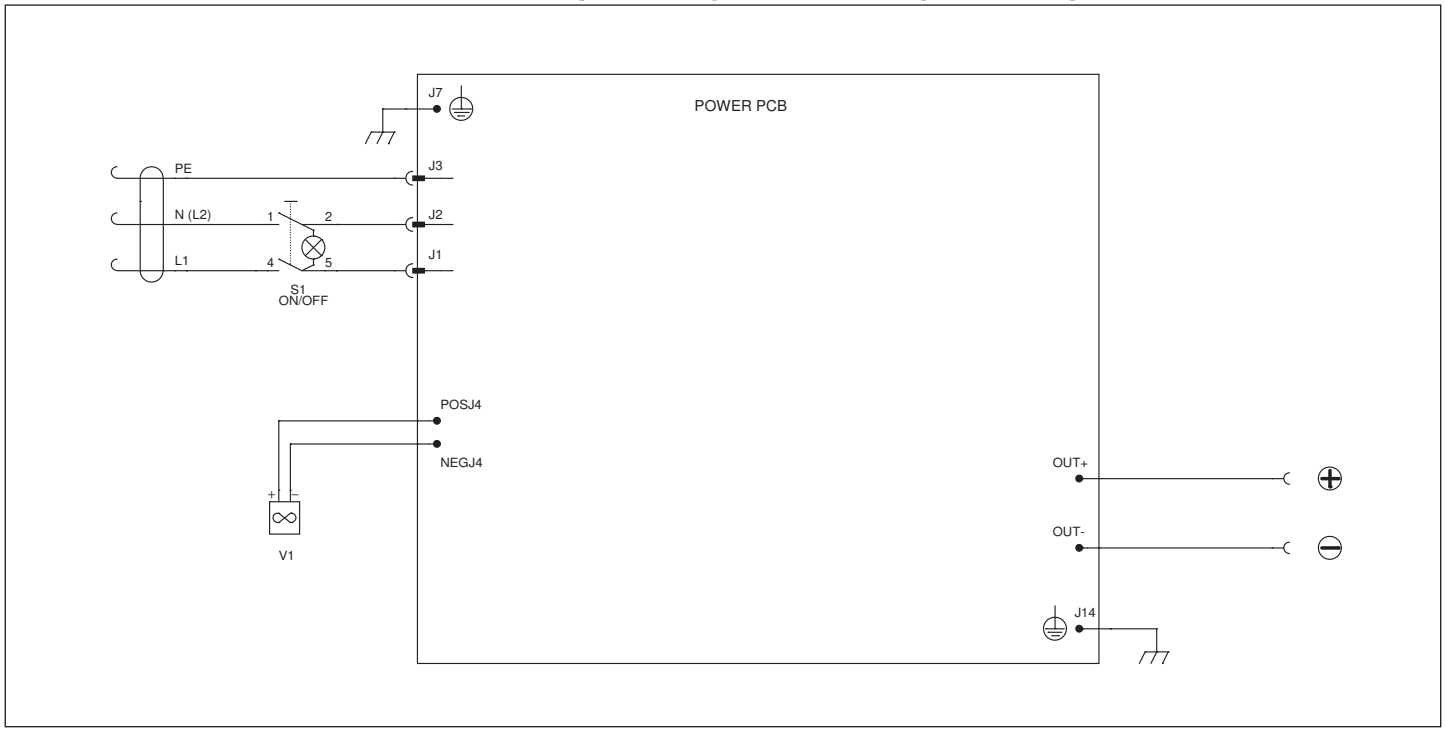

ELENCO PEZZI DI RICAMBIO
LISTE PIECES DETACHEES
SPARE PARTS LIST
ERSATZTEILLISTE
PIEZAS DE REPUESTO

FORCE 145

Esploso macchina, Dessin appareil, Machine drawing, Explosions Zeichnung des Geräts, Diseño seccionado maquina.



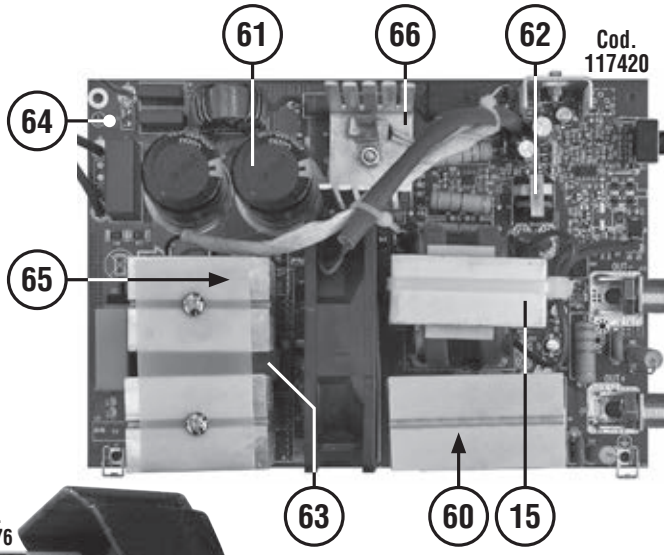

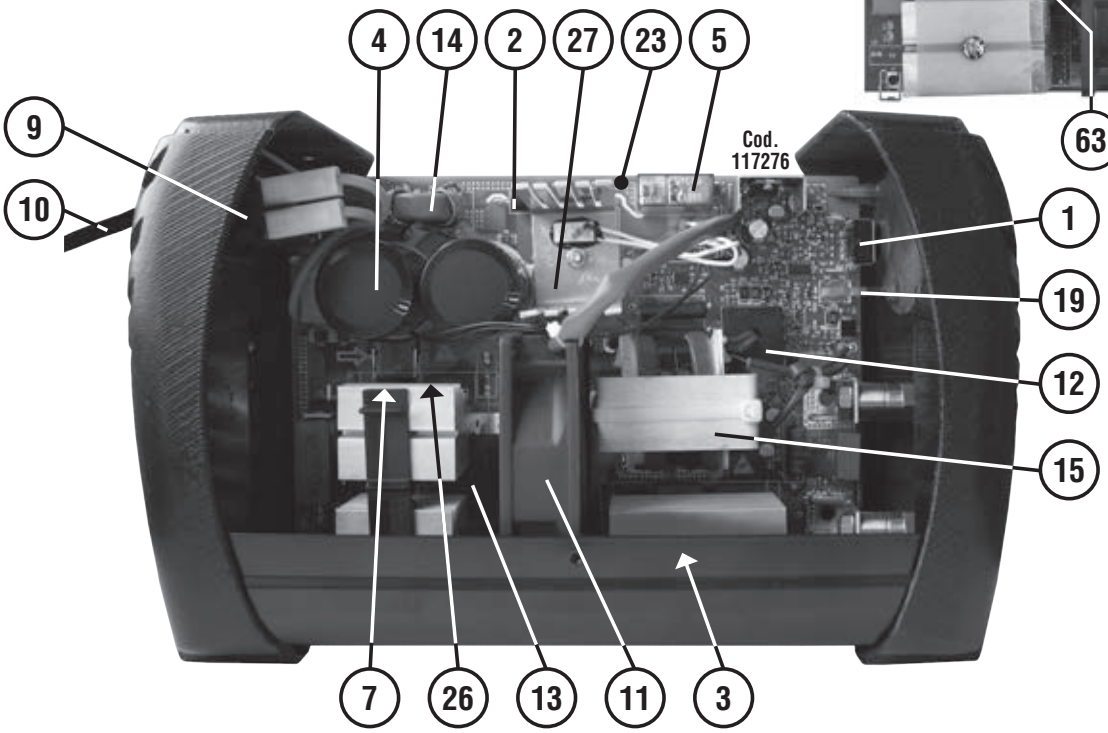

REF.	ELENCO PEZZI DI RICAMBIO PIECES DETACHEES SPARE PARTS LIST ERSATZTEILLISTE PIEZAS DE REPUESTO	CODICE CODE KODE
1	Pot. Carb. 10k lin. 0.20w 20% Pot. Carb. 10k lin. 0.20w 20% Pot. Carb. 10k lin. 0.20w 20% Pot. Carb. 10k lin. 0.20w 20% Pot. Carb. 10k lin. 0.20w 20%	112017
2	Res. Filo 47r 8w 5% Res. Fil 47r 8w 5% Res. Wire 47r 8w 5% Res. Draht 47r 8w 5% Res. Hilo 47r 8w 5%	112048
3	Kit diodi Kit diodes Diode kit Diode kit Kit diodo	981332
4	Condensatore Condensateur Capacitor Kondensator Capacitor	112514
5	Rele' 24vdc 17ma 250v 16a 1no Relais 24vdc 17ma 250v 16a 1no Relais 24vdc 17ma 250v 16a 1no Relais 24vdc 17ma 250v 16a 1no Conectador 24vdc 17ma 250v 16a 1no	116738
6	Cavo 16 mmq 1,8 m - spina atlas 25 Cable 16 mmq 1,8 m - fiche atlas 25 Cable 16 mmq 1,8 m - plug atlas 25 Kabel 16 mmq 1,8 m - stecker atlas 25 Cable 16 mmq 1,8 m - enchufe atlas 25	124508
7	Termostato 10,0a 250v 085° 063° nc Thermostat 10,0a 250v 085° 063° nc Thermal switch 10,0a 250v 085° 063° nc Thermostat 10,0a 250v 085° 063° nc Termostato 10,0a 250v 085° 063° nc	121249
8	Manopola Poignee Knob Griff Manija	121395
9	Interruttore Interrupteur Switch Schalter Interruptor	122381
10	Cavo alim. 3g1.5 2 M spina schuko Cable alim. 3g1.5 2 M fiche schuko Mains cable 3g1.5 2 M schuko plug Netzkabel 3g1.5 2 M schuko stecker Cable alim. 3g1.5 2 M espina schuko	132155
11	Ventilatore 24vdc 92x 92x25 Ventilateur 24vdc 92x 92x25 Fan 24vdc 92x 92x25 Ventilator 24vdc 92x 92x25 Ventilador 24vdc 92x 92x25	152901
12	Trasformatore di corrente Transformateur de courant Current transformer Stromwandler Transformador de corriente	152230
13	Trasformatore impulsi Transformateur d'impulsions Impulse transformer Impuls-transformator Transformador de impulsos	152247
14	Induttanza filtro Inductance filter Filter inductance Filter drossel Induccion filtro	164741
15	Trasformatore pot.2xe55 1.5:15:15:04 Transformateur puis.2xe55 1.5:15:15:04 Power trafo 2xe55 1.5:15:15:04 Leistungstransfo 2xe55 1.5:15:15:04 Transformador pot.2xe55 1.5:15:15:04	169631
16	Frontale Partie frontal Front panel Geraetefront Frontal	322893
17	Retro Partie arriere Back panel Rueckseite Trasera	322894
18	Manico Poignee Handle Handgriff Manija	322895
19	Guida luce Guide Guide Führung Guia	322898
20	Presa atlas 25mmq Prise atlas 25mmq Socket atlas 25mmq Steckdose atlas 25mmq Enchufe atlas 25mmq	712000
21	Colorado 150b pinza di massa 150a Colorado 150b pince de masse 150a Colorado 150b work clamp 150a Colorado 150b masseklemme 150a Colorado 150b pinza de masa 150a	712001
22	Dallas 300 pinza portaelettrodi 300a Dallas 300 pince porte-electrodes 300a Dallas 300 electrode holder 300a Dallas 300 elektrodenhalter 300a Dallas 300 pinza portaelectrodos 300a	712260
24	Kit mantello Kit capot Cover kit Deckelkit Kit panel de cobertura	980784
25	Kit fondo Kit chassis Bottom kit Bodenteil kit Kit fondo	980786
26	Kit igbt + diodo Kit igbt + diode Igbt + diode kit Igbt + diode kit Kit igbt + diodo	980789
27	Kit ponte + termostato Kit pont + thermostat Bridge + thermal switch kit Bruecke + thermostat kit Kit puente + termostato	980802
29	Spina atlas 25mmq Fiche atlas 25mmq Atlas plug 25mmq Atlas stecker 25mmq Enchufe atlas 25mmq	712039
60	Kit diodi Kit diodes Diode kit Diode kit Kit diodo	981591
61	Cap. All.Rad 680u 400v -20%+20% p10 Cap. All.Rad 680u 400v -20%+20% p10 Cap. All.Rad 680u 400v -20%+20% p10 Cap. All.Rad 680u 400v -20%+20% p10 Cap. All.Rad 680u 400v -20%+20% p10	111332
62	Ta 1/300 30a 50khz Ta 1/300 30a 50khz Ta 1/300 30a 50khz Ta 1/300 30a 50khz Ta 1/300 30a 50khz	152312
63	Trasformatore impulsi Transformateur d'impulsions Impulse transformer Impuls-transformator Transformador de impulsos	152316
64	Kit scheda completa Kit platine complete Complete control pcb kit Komplette steurungskarte kit Kit tarjeta de controlo completa	982054
65	Kit igbt + diodi Kit igbt + diodes Kit igbt + diodes Kit igbt + dioden Kit igbt + diodos	982051
66	Kit ponte + termostato Kit pont + thermostat Bridge + thermal switch kit Bruecke + thermostat kit Kit puente + termostato	982052

Schema elettrico, Schéma électrique, Diagram, Schaltplan, Esquema de conexiones.

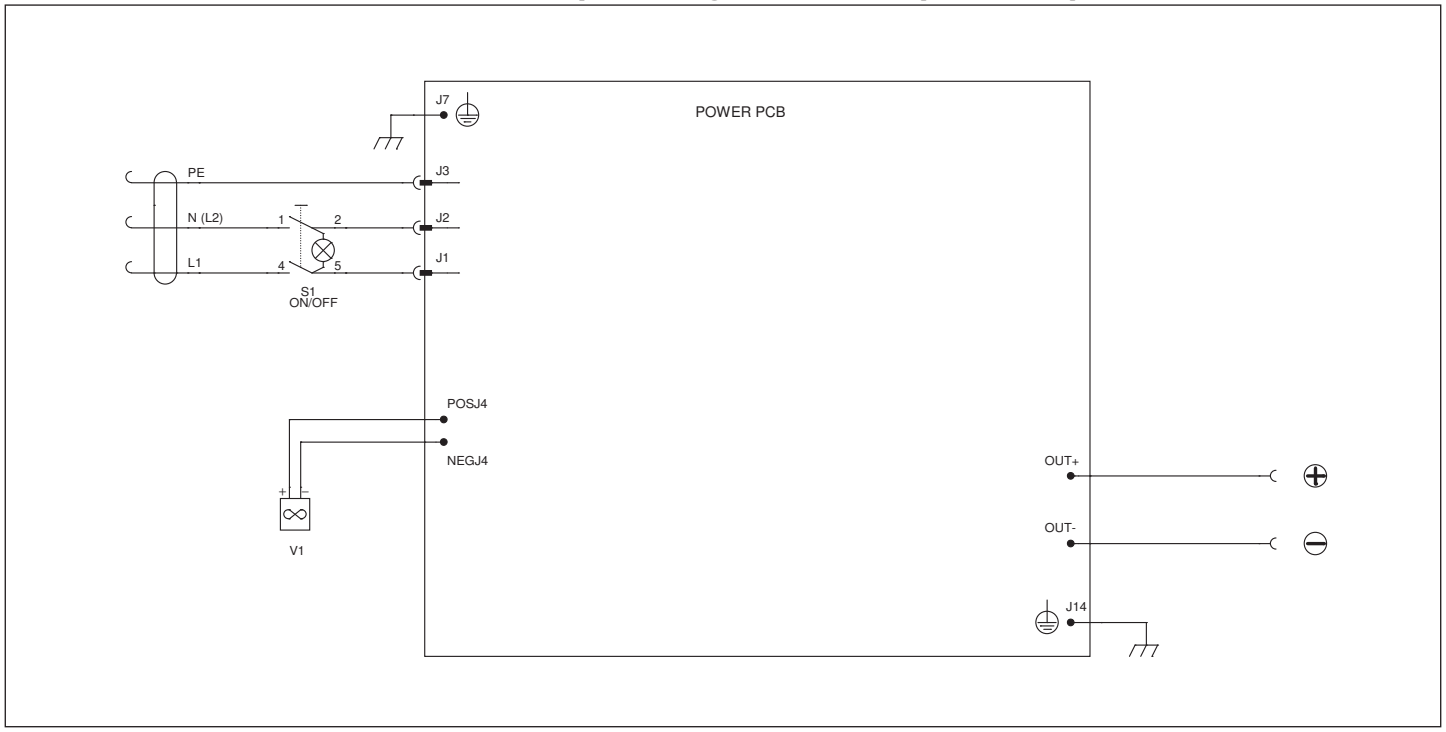

ELENCO PEZZI DI RICAMBIO
LISTE PIECES DETACHEES
SPARE PARTS LIST
ERSATZTEILLISTE
PIEZAS DE REPUESTO

FORCE 165

Esploso macchina, Dessin appareil, Machine drawing, Explosions Zeichnung des Geräts, Diseño seccionado maquina.



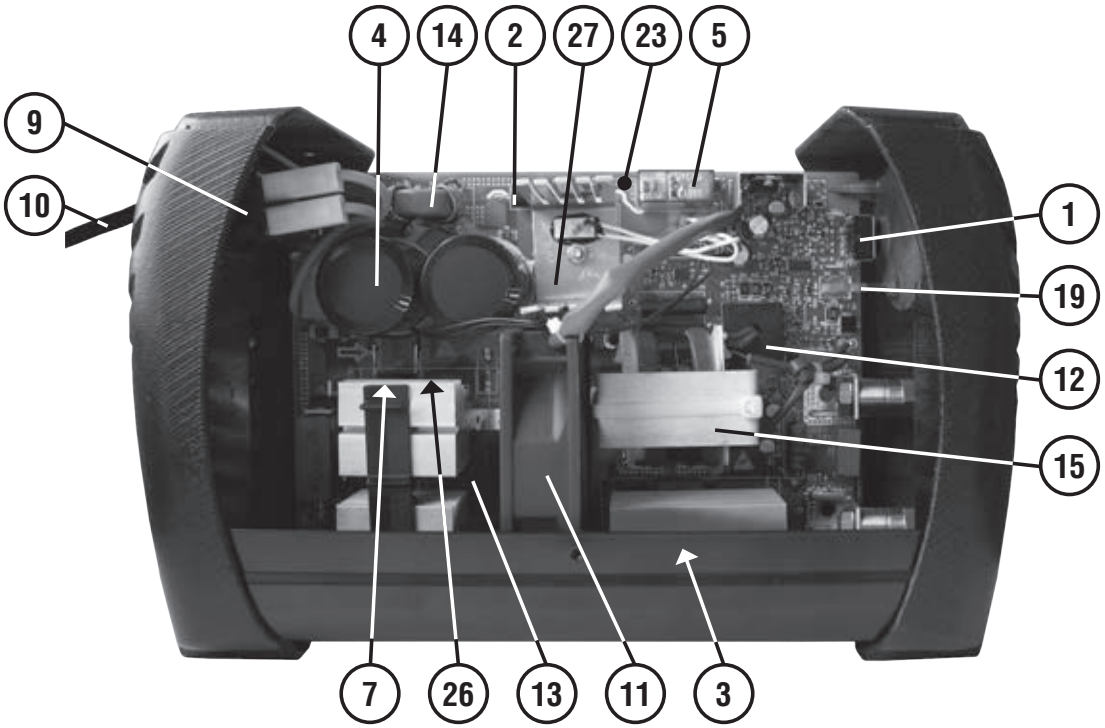

REF.	ELENCO PEZZI DI RICAMBIO PIECES DETACHEES SPARE PARTS LIST ERSATZTEILLISTE PIEZAS DE REPUESTO	CODICE CODE KODE
1	Pot. Carb. 10k lin. 0.20w 20% Pot. Carb. 10k lin. 0.20w 20% Pot. Carb. 10k lin. 0.20w 20% Pot. Carb. 10k lin. 0.20w 20% Pot. Carb. 10k lin. 0.20w 20%	112017
2	Res. Filo 47r 8w 5% Res. Fil 47r 8w 5% Res. Wire 47r 8w 5% Res. Draht 47r 8w 5% Res. Hilo 47r 8w 5%	112048
3	Kit diodi Kit diodes Diode kit Diode kit Kit diodo	981332
4	Condensatore Condensateur Capacitor Kondensator Condensador	113122
5	Rele' 24vdc 17ma 250v 16a 1no Relais 24vdc 17ma 250v 16a 1no Relais 24vdc 17ma 250v 16a 1no Relais 24vdc 17ma 250v 16a 1no Conectador 24vdc 17ma 250v 16a 1no	116738
6	Cavo 16 mmq 1,8 m - spina atlas 25 Cable 16 mmq 1,8 m - fiche atlas 25 Cable 16 mmq 1,8 m - plug atlas 25 Kabel 16 mmq 1,8 m - stecker atlas 25 Cable 16 mmq 1,8 m - enchufe atlas 25	124508
7	Termostato 10,0a 250v 085° 063° nc Thermostat 10,0a 250v 085° 063° nc Thermal switch 10,0a 250v 085° 063° nc Thermostat 10,0a 250v 085° 063° nc Termostato 10,0a 250v 085° 063° nc	121249
8	Manopola Poignee Knob Griff Manija	121395
9	Interruttore Interrupteur Switch Schalter Interruptor	122381
10	Cavo alim. 3g1.5 2 M spina schuko Cable alim. 3g1.5 2 M fiche schuko Mains cable 3g1.5 2 M schuko plug Netzkabel 3g1.5 2 M schuko stecker Cable alim. 3g1.5 2 M espina schuko	132155
11	Ventilatore 24vdc 92x 92x25 Ventilateur 24vdc 92x 92x25 Fan 24vdc 92x 92x25 Ventilator 24vdc 92x 92x25 Ventilador 24vdc 92x 92x25	152901
12	Trasformatore di corrente Transformateur de courant Current transformer Stromwandler Transformador de corriente	152230
13	Trasformatore impulsi Transformateur d'impulsions Impulse transformer Impuls-transformator Transformador de impulsos	152247
14	Induttanza filtro Inductance filter Filter inductance Filter drossel Induccion filtro	164741
15	Trasformatore pot.2xe55 1.5:15:15:04 Transformateur puis.2xe55 1.5:15:15:04 Power trafo 2xe55 1.5:15:15:04 Leistungstransfo 2xe55 1.5:15:15:04 Transformador pot.2xe55 1.5:15:15:04	169631
16	Frontale Partie frontal Front panel Geraetefront Frontal	322893
17	Retro Partie arriere Back panel Rueckseite Trasera	322894
18	Manico Poignee Handle Handgriff Manija	322895
19	Guida luce Guide Guide Führung Guia	322898
20	Presa atlas 25mmq Prise atlas 25mmq Socket atlas 25mmq Steckdose atlas 25mmq Enchufe atlas 25mmq	712000
21	Colorado 150b pinza di massa 150a Colorado 150b pince de masse 150a Colorado 150b work clamp 150a Colorado 150b masseklemme 150a Colorado 150b pinza de masa 150a	712001
22	Dallas 300 pinza portaelettrodi 300a Dallas 300 pince porte-electrodes 300a Dallas 300 electrode holder 300a Dallas 300 elektrodenhalter 300a Dallas 300 pinza portaelectrodos 300a	712260
23	Kit scheda completa Kit platine complete Complete control pcb kit Komplette steurungskarte kit Kit tarjeta de controlo completa	982054
23	Kit scheda completa Kit platine complete Complete control pcb kit Komplette steurungskarte kit Kit tarjeta de controlo completa	982054
24	Kit mantello Kit capot Cover kit Deckelkit Kit panel de cobertura	980785
25	Kit fondo Kit chassis Bottom kit Bodenteil kit Kit fondo	980786
26	Kit igbt + diodo Kit igbt + diode Igbt + diode kit Igbt + diode kit Kit igbt + diodo	980789
26	Kit igbt + diodi Kit igbt + diodes Kit igbt + diodes Kit igbt + dioden Kit igbt + diodos	982051
27	Kit ponte + termostato Kit pont + thermostat Bridge + thermal switch kit Bruecke + thermostat kit Kit puente + termostato	980802
27	Kit ponte + termostato Kit pont + thermostat Bridge + thermal switch kit Bruecke + thermostat kit Kit puente + termostato	982052
29	Spina atlas 25mmq Fiche atlas 25mmq Atlas plug 25mmq Atlas stecker 25mmq Enchufe atlas 25mmq	712039

Schema elettrico, Schéma électrique, Diagram, Schaltplan, Esquema de conexiones.

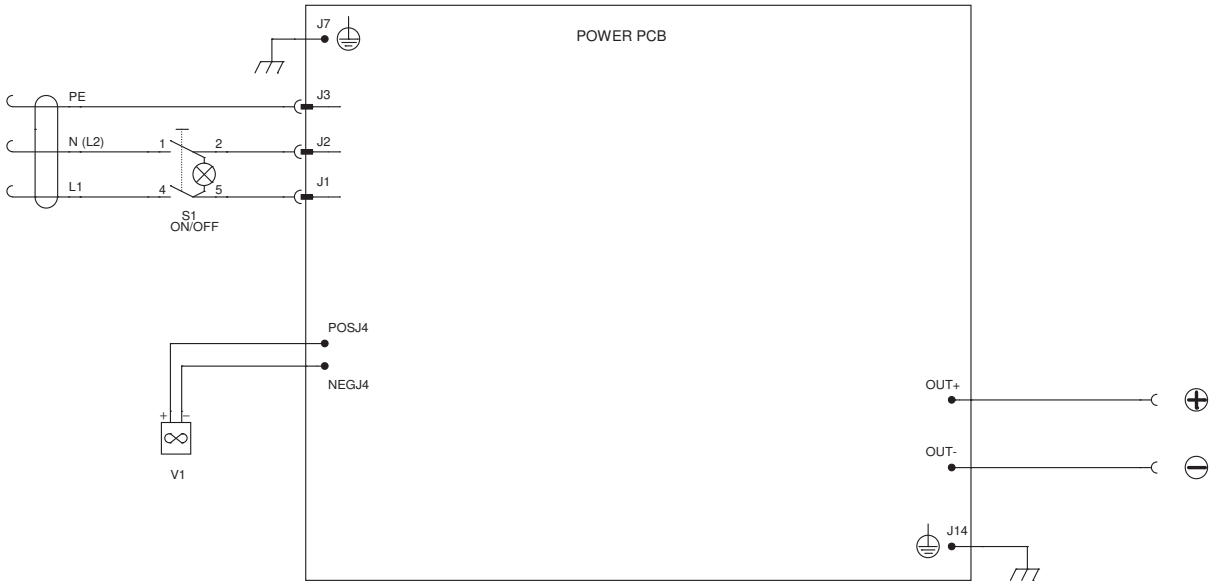

ELENCO PEZZI DI RICAMBIO
LISTE PIECES DETACHEES
SPARE PARTS LIST
ERSATZTEILLISTE
PIEZAS DE REPUESTO

FORCE 195

Esploso macchina, Dessin appareil, Machine drawing, Explosions Zeichnung des Geräts, Diseño seccionado maquina.



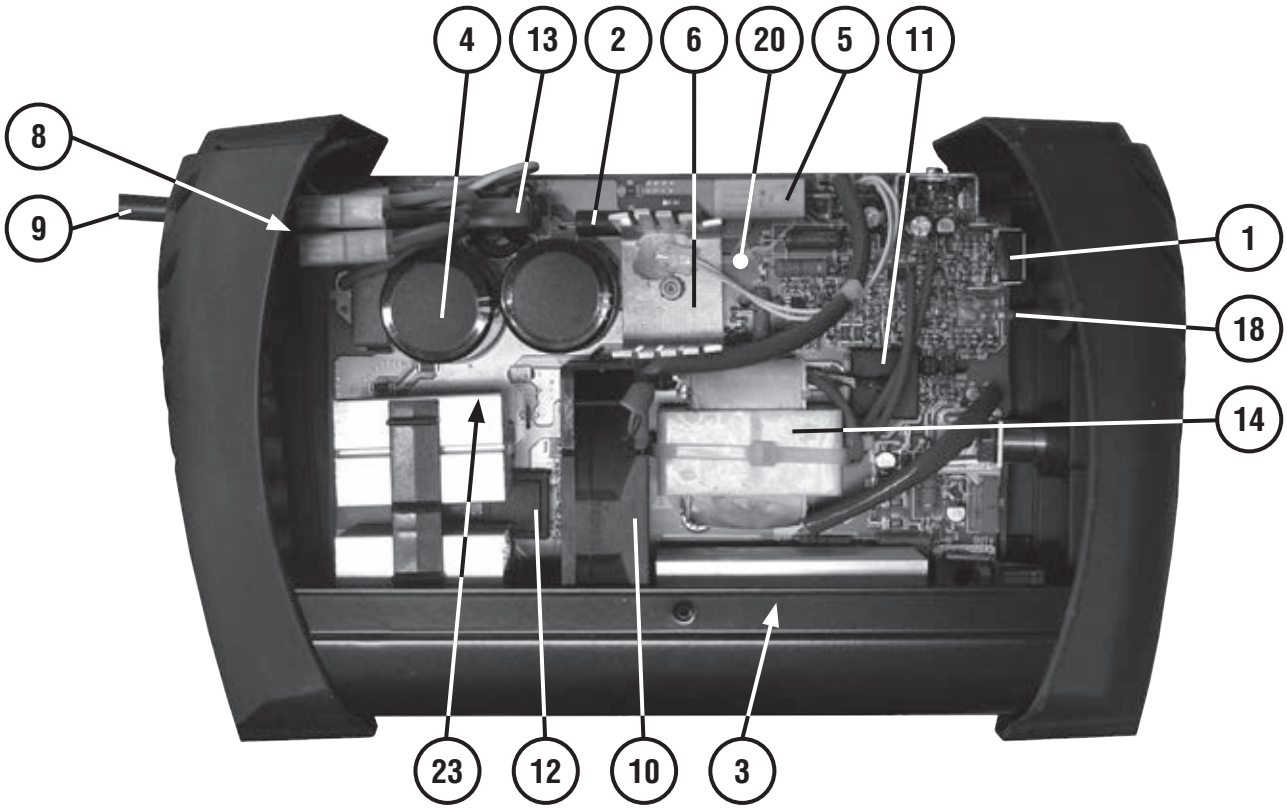

REF.	ELENCO PEZZI DI RICAMBIO PIECES DETACHEES SPARE PARTS LIST ERSATZTEILLISTE PIEZAS DE REPUESTO	CODICE CODE KODE
1	Pot. Carb. 10k lin. 0.20w 20% Pot. Carb. 10k lin. 0.20w 20% Pot. Carb. 10k lin. 0.20w 20% Pot. Carb. 10k lin. 0.20w 20% Pot. Carb. 10k lin. 0.20w 20%	112017
2	Res. Filo 47r 8w 5% Res. Fil 47r 8w 5% Res. Wire 47r 8w 5% Res. Draht 47r 8w 5% Res. Hilo 47r 8w 5%	112048
3	Diodo Diode Diode Diode Diodo	112948
4	Condensatore Condensateur Capacitor Kondensator Condensador	112694
5	Rele' 24vdc 17ma 250v 16a 1no Relais 24vdc 17ma 250v 16a 1no Relais 24vdc 17ma 250v 16a 1no Relais 24vdc 17ma 250v 16a 1no Conectador 24vdc 17ma 250v 16a 1no	116738
6	Kit ponte + termostato Kit pont + thermostat Bridge + thermal switch kit Bruecke + thermostat kit Kit puente + termostato	981049
7	Manopola Poignee Knob Griff Manija	121395
8	Interruttore Interrupteur Switch Schalter Interruptor	122381
9	Cavo alim. 3g1.5 2 M spina schuko Cable alim. 3g1.5 2 M fiche schuko Mains cable 3g1.5 2 M schuko plug Netzkabel 3g1.5 2 M schuko stecker Cable alim. 3g1.5 2 M espina schuko	132155
10	Ventilatore Ventilateur Fan Ventilator Aventador	152019
11	Trasformatore di corrente Transformateur de courant Current transformer Stromwandler Transformador de corriente	152230
12	Trasformatore impulsi Transformateur d'impulsions Impulse transformer Impuls-transformator Transformador de impulsos	152247

REF.	ELENCO PEZZI DI RICAMBIO PIECES DETACHEES SPARE PARTS LIST ERSATZTEILLISTE PIEZAS DE REPUESTO	CODICE CODE KODE
13	Induttanza filtro Inductance filter Filter inductance Filter drossel Induccion filtro	164741
14	Trasformatore potenza Trasformateur puissance Power transformer Leistungstransformator Transformador de potencia	169689
15	Frontale Partie frontal Front panel Geraetefront Frontal	322893
16	Retro Partie arriere Back panel Ruecksеite Trasera	322894
17	Manico Poignee Handle Handgriff Manija	322895
18	Guida luce Guide Guide Führung Guia	322898
19	Presa atlas 25mmq Prise atlas 25mmq Socket atlas 25mmq Steckdose atlas 25mmq Enchufe atlas 25mmq	712000
20	Kit scheda completa Kit fiche complete Complete pcb kit Komplette karte kit Kit tarjeta completa	981026
21	Kit mantello Kit capot Cover kit Deckelkit Kit panel de cobertura	981027
22	Kit fondo Kit chassis Bottom kit Bodenteil kit Kit fondo	980786
23	Kit igbt + diodo Kit igbt + diode Igbt + diode kit Igbt + diode kit Kit igbt + diodo	980990
24	Cavo 16 mmq 1,8 m - spina atlas 25 Cable 16 mmq 1,8 m - fiche atlas 25 Cable 16 mmq 1,8 m - plug atlas 25 Kabel 16 mmq 1,8 m - stecker atlas 25 Cable 16 mmq 1,8 m - enchufe atlas 25	124508

REF.	ELENCO PEZZI DI RICAMBIO PIECES DETACHEES SPARE PARTS LIST ERSATZTEILLISTE PIEZAS DE REPUESTO	CODICE CODE KODE
25	Colorado 150b pinza di massa 150a Colorado 150b pince de masse 150a Colorado 150b work clamp 150a Colorado 150b masseklemme 150a Colorado 150b pinza de masa 150a	712001
26	Dallas 300 pinza portaelettrodi 300a Dallas 300 pince porte-electrodes 300a Dallas 300 electrode holder 300a Dallas 300 elektrodenhalter 300a Dallas 300 pinza portaelectrodos 300a	712260
27	Spina atlas 25mmq Fiche atlas 25mmq Atlas plug 25mmq Atlas stecker 25mmq Enchufe atlas 25mmq	712039

Schema elettrico, Schéma électrique, Diagram, Schaltplan, Esquema de conexiones.

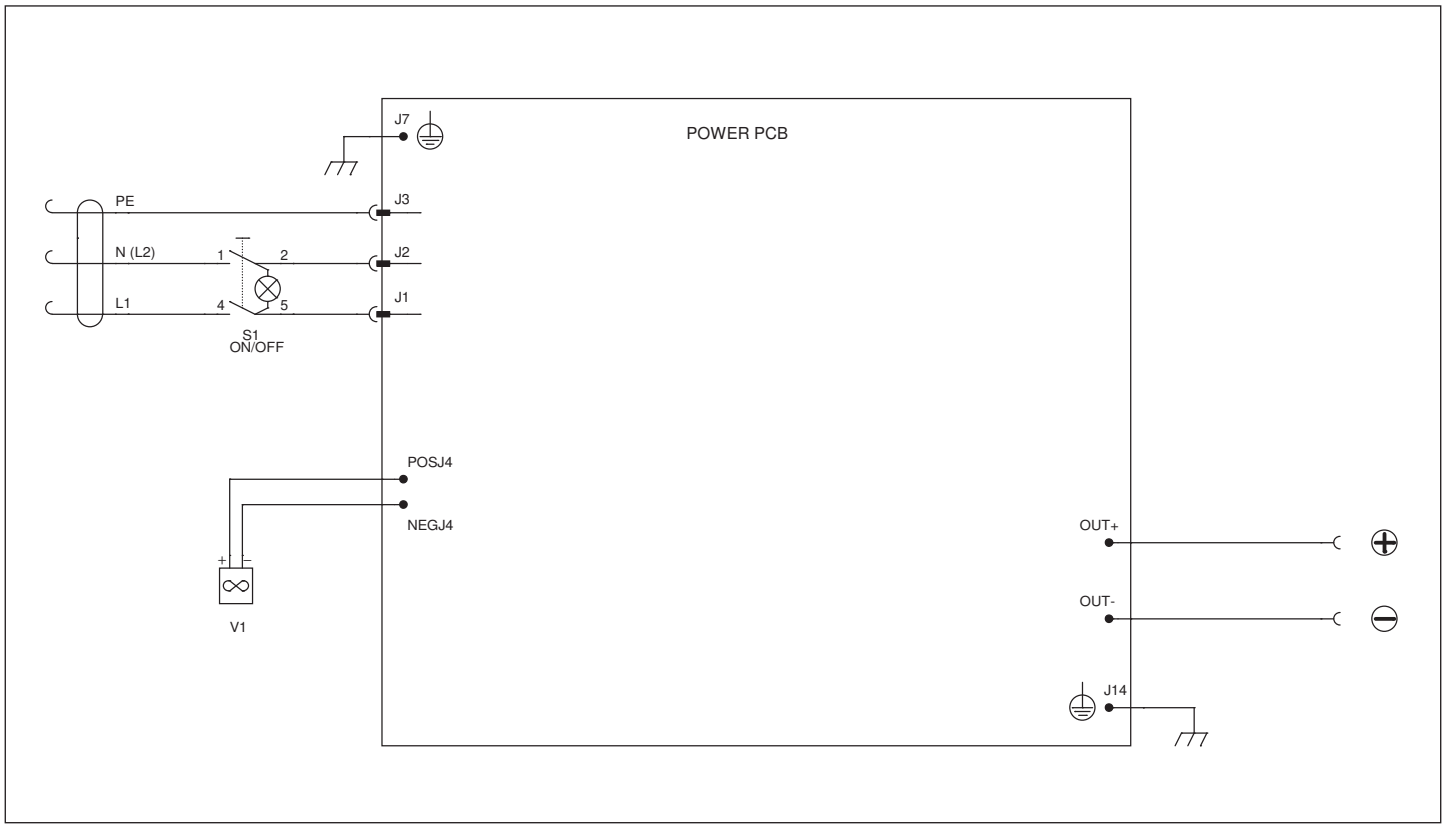

ELENCO PEZZI DI RICAMBIO
LISTE PIECES DETACHEES
SPARE PARTS LIST
ERSATZTEILLISTE
PIEZAS DE REPUESTO

TECNICA 171/S
TECNICA 211/S

TELWIN

Esploso macchina, Dessin appareil, Machine drawing, Explosions Zeichnung des Geräts, Diseño seccionado maquina.



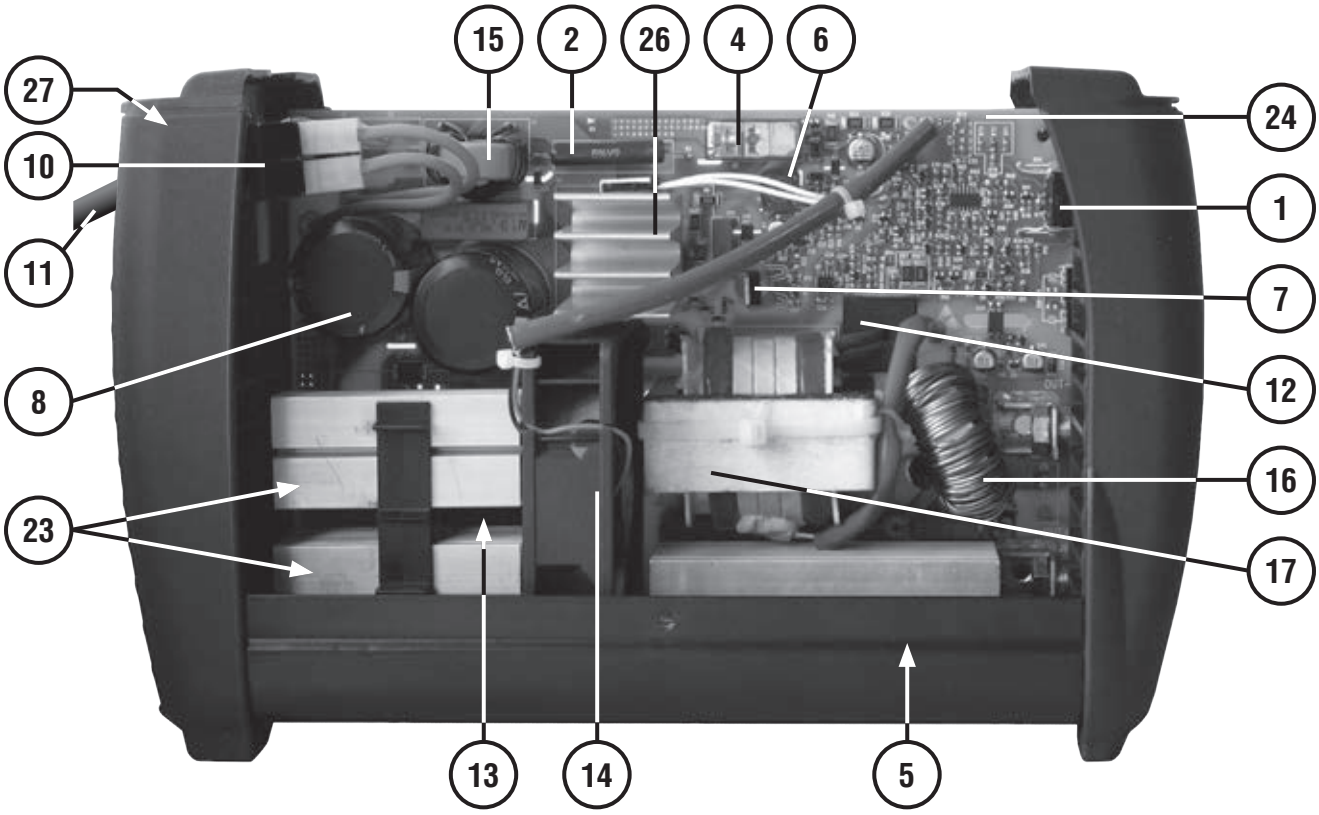

REF.	ELENCO PEZZI DI RICAMBIO PIECES DETACHEES SPARE PARTS LIST ERSATZTEILLISTE PIEZAS DE REPUESTO	TECNICA 171/S CODICE	TECNICA 211/S CODE KODE
1	Pot. Carb. 10k lin. 0.20w 20% Pot. Carb. 10k lin. 0.20w 20% Pot. Carb. 10k lin. 0.20w 20% Pot. Carb. 10k lin. 0.20w 20% Pot. Carb. 10k lin. 0.20w 20%	112017	112017
2	Res. Filo 47r 8w 5% Res. Fil 47r 8w 5% Res. Wire 47r 8w 5% Res. Draht 47r 8w 5% Res. Hilo 47r 8w 5%	112048	112048
4	Rele' Relais Relais Relais Relais	116320	116320
5	Diodo Diode Diode Diode Diodo	116839	116839
6	Induttanza Inductance Inductance Drossel Induccion	116848	116848
7	Mosfet n-ch Mosfet n-ch Mosfet n-ch Mosfet n-ch Mosfet n-ch	116849	116849
8	Condensatore Condensateur Condenser Kondensator Condensator	116857	116945
9	Manopola Poignee Knob Griff Manija	121395	121395
10	Interruttore Interrupteur Switch Schalter Interruptor	122381	121248
11	Cavo alim. 3g1.5 2 M spina schuko Cable alim. 3g1.5 2 M fiche schuko Mains cable 3g1.5 2 M schuko plug Netzkabel 3g1.5 2 M schuko stecker Cable alim. 3g1.5 2 M espina schuko	132155	132155
12	Trasformatore di corrente Transformateur de courant Current transformer Stromwandler Transformador de corriente	152230	152230
13	Trasformatore impulsi Transformateur d'impulsions Impulse transformer Impuls-transformator Transformador de impulsos	152247	152247
14	Ventilatore Ventilateur Fan Ventilator Ventilador	152904	152904
15	Induttanza filtro Inductance filter Filter inductance Filter drossel Induccion filtro	164741	164741

REF.	ELENCO PEZZI DI RICAMBIO PIECES DETACHEES SPARE PARTS LIST ERSATZTEILLISTE PIEZAS DE REPUESTO	TECNICA 171/S CODICE	TECNICA 211/S CODE KODE
16	Induttanza Inductance Inductance Drossel Induccion	169907	169907
17	Trasformatore potenza Transformateur de puissance Power trafo Leistungstransformer Transformador de potencia	169665	169666
18	Assieme manico Set poignee Handle set Handgriff set Set manija	312434	312434
19	Frontale Partie frontal Front panel Geraetefront Frontal	322950	322950
20	Retro Partie arriere Back panel Rueckseite Trasera	322951	322951
21	Presa atlas 25mmq Prise atlas 25mmq Socket atlas 25mmq Steckdose atlas 25mmq Enchufe atlas 25mmq	712000	712000
22	Kit fondo Kit chassis Bottom kit Basis bodenteil Kit fondo	980345	980345
23	Kit igbt + diodo Kit igbt + diode Igbt + diode kit Igbt + diode kit Kit igbt + diodo	980614	980990
24	Kit scheda completa Kit fiche complete Complete pcb kit Komplette karte kit Kit tarjeta completa	980985	981072
25	Kit mantello Kit capot Cover kit Deckelkit Kit panel de cobertura	980988	981073
26	Kit ponte + termostato Kit pont + thermostat Bridge + thermal switch kit Bruecke + thermostat kit Kit puente + termostato	980992	980992
31	Copri interruttore Couvre interrupteur Switch cover Schalterdeckel Cubre interruptor	122353	122353

Schema elettrico, Schéma électrique, Diagram, Schaltplan, Esquema de conexiones.

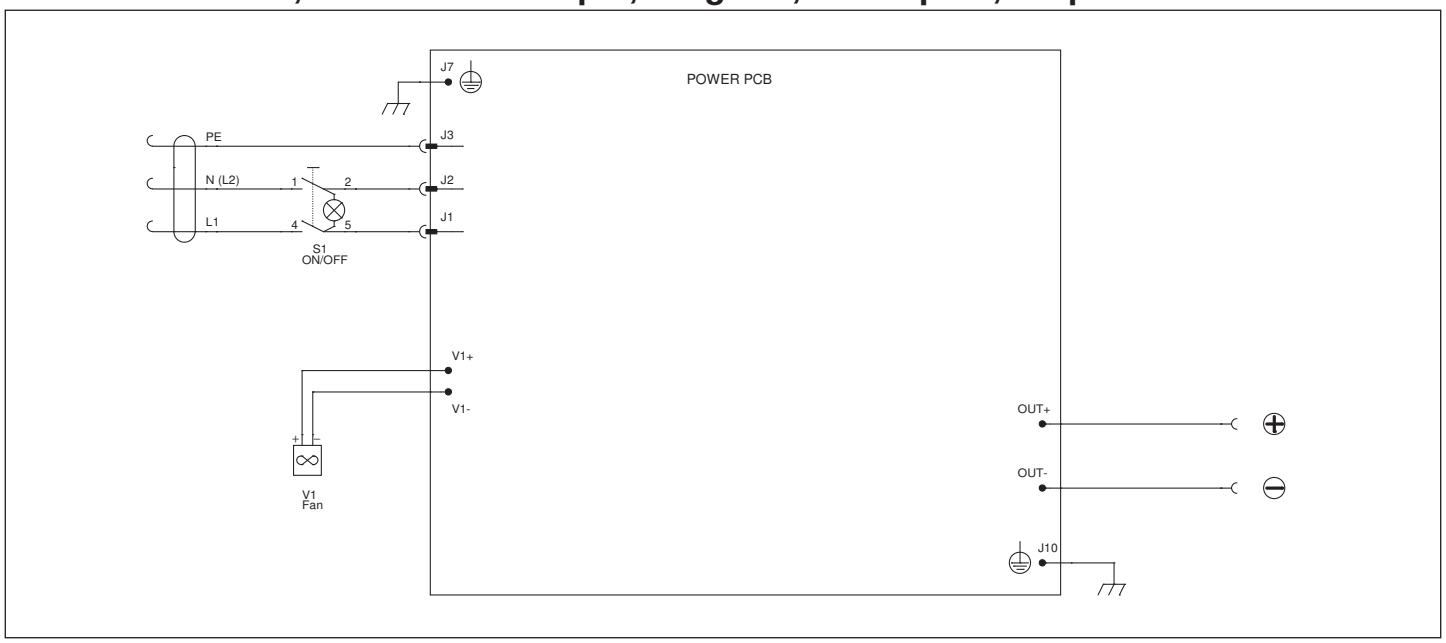

ELENCO PEZZI DI RICAMBIO
LISTE PIECES DETACHEES
SPARE PARTS LIST
ERSATZTEILLISTE
PIEZAS DE REPUESTO

FORCE 168 MPGE

Esploso macchina, Dessin appareil, Machine drawing, Explosions Zeichnung des Geräts, Diseño seccionado maquina.



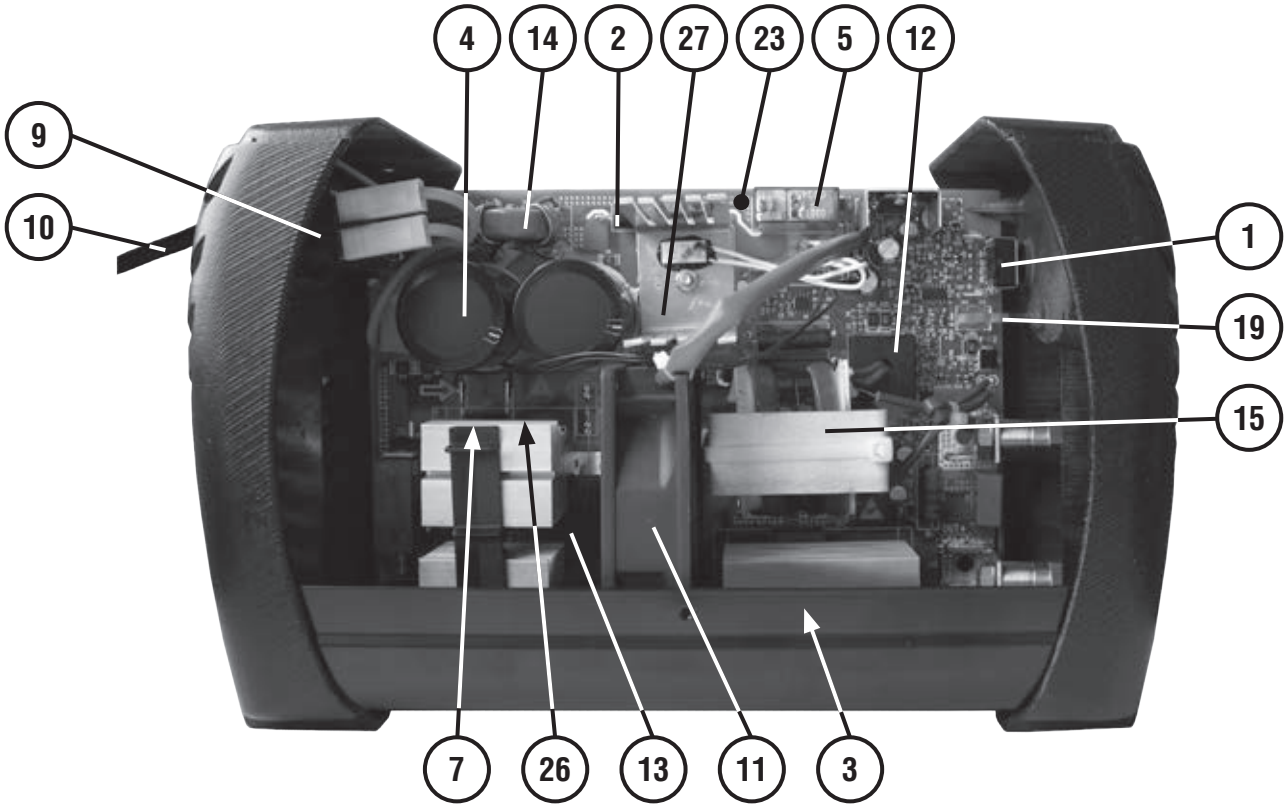

REF.	ELENCO PEZZI DI RICAMBIO PIECES DETACHEES SPARE PARTS LIST ERSATZTEILLISTE PIEZAS DE REPUESTO	CODICE CODE KODE
1	Pot. Carb. 10k lin. 0.20w 20% Pot. Carb. 10k lin. 0.20w 20% Pot. Carb. 10k lin. 0.20w 20% Pot. Carb. 10k lin. 0.20w 20% Pot. Carb. 10k lin. 0.20w 20%	112017
2	Res. Filo 47r 8w 5% Res. Fil 47r 8w 5% Res. Wire 47r 8w 5% Res. Draht 47r 8w 5% Res. Hilo 47r 8w 5%	112048
3	Kit diodi Kit diodes Diode kit Diode kit Kit diodo	981332
4	Condensatore Condensateur Condenser Kondensator Condensator	116926
5	Rele' 24vdc 17ma 250v 16a 1no Relais 24vdc 17ma 250v 16a 1no Relais 24vdc 17ma 250v 16a 1no Relais 24vdc 17ma 250v 16a 1no Conectador 24vdc 17ma 250v 16a 1no	116738
6	Cavo 16 mmq 1,8 m - spina atlas 25 Cable 16 mmq 1,8 m - fiche atlas 25 Cable 16 mmq 1,8 m - plug atlas 25 Kabel 16 mmq 1,8 m - stecker atlas 25 Cable 16 mmq 1,8 m - enchufe atlas 25	124508
7	Termostato 10,0a 250v 085° 063° nc Thermostat 10,0a 250v 085° 063° nc Thermal switch 10,0a 250v 085° 063° nc Thermostat 10,0a 250v 085° 063° nc Termostato 10,0a 250v 085° 063° nc	121249
8	Manopola Poignee Knob Griff Manija	121395
9	Interruttore Interrupteur Switch Schalter Interruptor	122381
10	Cavo alim. 3g1.5 2 M spina schuko Cable alim. 3g1.5 2 M fiche schuko Mains cable 3g1.5 2 M schuko plug Netzkabel 3g1.5 2 M schuko stecker Cable alim. 3g1.5 2 M espina schuko	132155
11	Ventilatore 24vdc 92x 92x25 Ventilateur 24vdc 92x 92x25 Fan 24vdc 92x 92x25 Ventilator 24vdc 92x 92x25 Ventilador 24vdc 92x 92x25	152901
12	Trasformatore di corrente Transformateur de courant Current transformer Stromwandler Transformador de corriente	152230
13	Trasformatore impulsi Transformateur d'impulsions Impulse transformer Impuls-transformator Transformador de impulsos	152247
14	Induttanza filtro Inductance filter Filter inductance Filter drossel Induccion filtro	164741
15	Trasformatore pot.2xe55 1.5:15:15:04 Transformateur puis.2xe55 1.5:15:15:04 Power trafo 2xe55 1.5:15:15:04 Leistungstransfo 2xe55 1.5:15:15:04 Transformador pot.2xe55 1.5:15:15:04	169631
16	Frontale Partie frontal Front panel Geraetefront Frontal	322893
17	Retro Partie arriere Back panel Rueckseite Trasera	322894
18	Manico Poignee Handle Handgriff Manija	322895
19	Guida luce Guide Guide Führung Guia	322898
20	Presa atlas 25mmq Prise atlas 25mmq Socket atlas 25mmq Steckdose atlas 25mmq Enchufe atlas 25mmq	712000
21	Colorado 150b pinza di massa 150a Colorado 150b pince de masse 150a Colorado 150b work clamp 150a Colorado 150b masseklemme 150a Colorado 150b pinza de masa 150a	712001
22	Dallas 300 pinza portaelettrodi 300a Dallas 300 pince porte-electrodes 300a Dallas 300 electrode holder 300a Dallas 300 elektrodenhalter 300a Dallas 300 pinza portaelectrodos 300a	712260
23	Kit scheda completa Kit platine complete Complete control pcb kit Komplette steurungskarte kit Kit tarjeta controlo compl.	981022
24	Kit mantello Kit capot Cover kit Deckelkit Kit panel de cobertura	981023
25	Kit fondo Kit chassis Bottom kit Bodenteil kit Kit fondo	980786
26	Kit igbt + diodo Kit igbt + diode Igbt + diode kit Igbt + diode kit Kit igbt + diodo	980789
27	Kit ponte + termostato Kit pont + thermostat Bridge + thermal switch kit Bruecke + thermostat kit Kit puente + termostato	981029
29	Spina atlas 25mmq Fiche atlas 25mmq Atlas plug 25mmq Atlas stecker 25mmq Enchufe atlas 25mmq	712039

Schema elettrico, Schéma électrique, Diagram, Schaltplan, Esquema de conexiones.

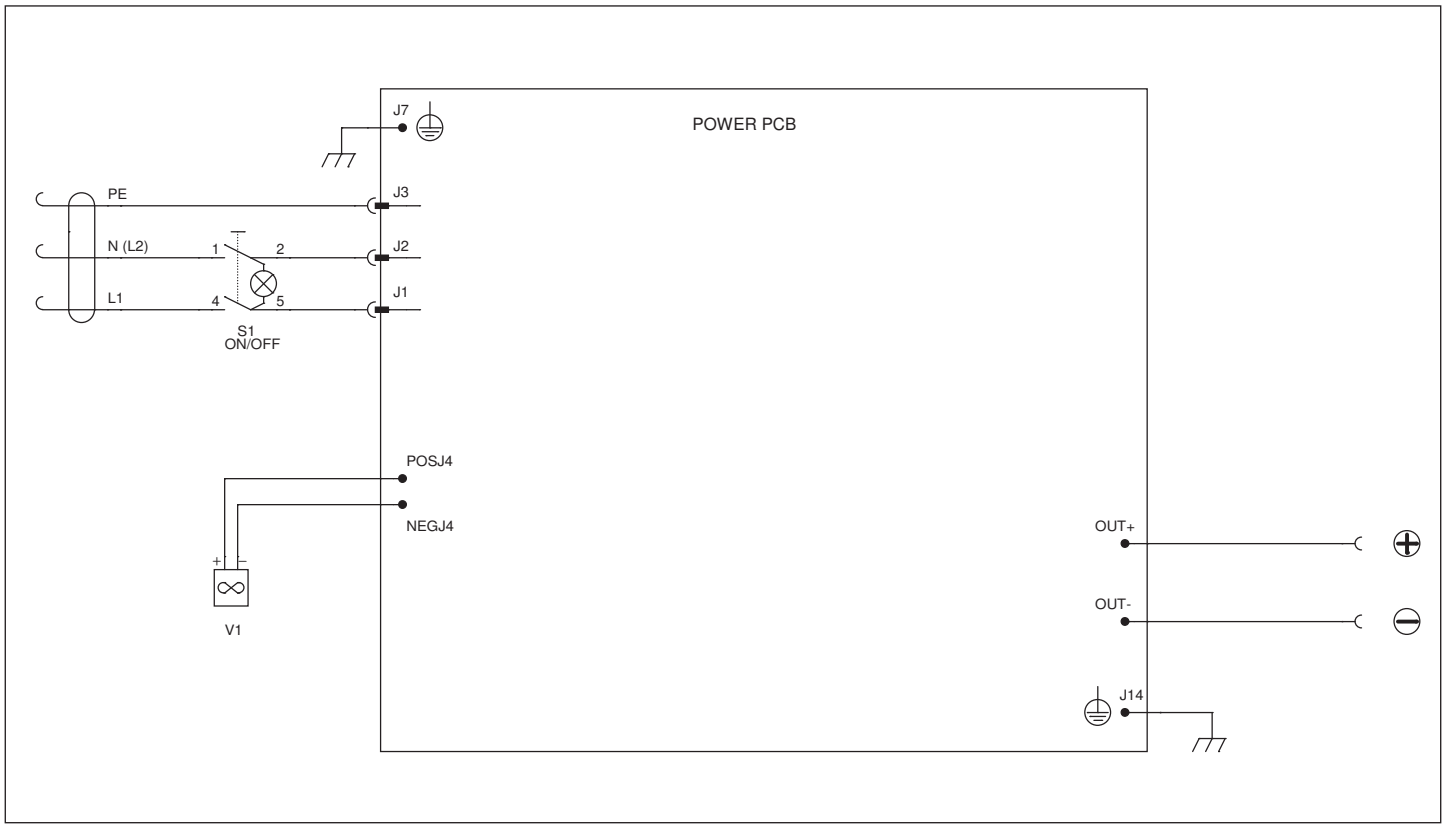

ELENCO PEZZI DI RICAMBIO
LISTE PIECES DETACHEES
SPARE PARTS LIST
ERSATZTEILLISTE
PIEZAS DE REPUESTO

TECNICA 188 MPGE

Esploso macchina, Dessin appareil, Machine drawing, Explosions Zeichnung des Geräts, Diseño seccionado maquina.

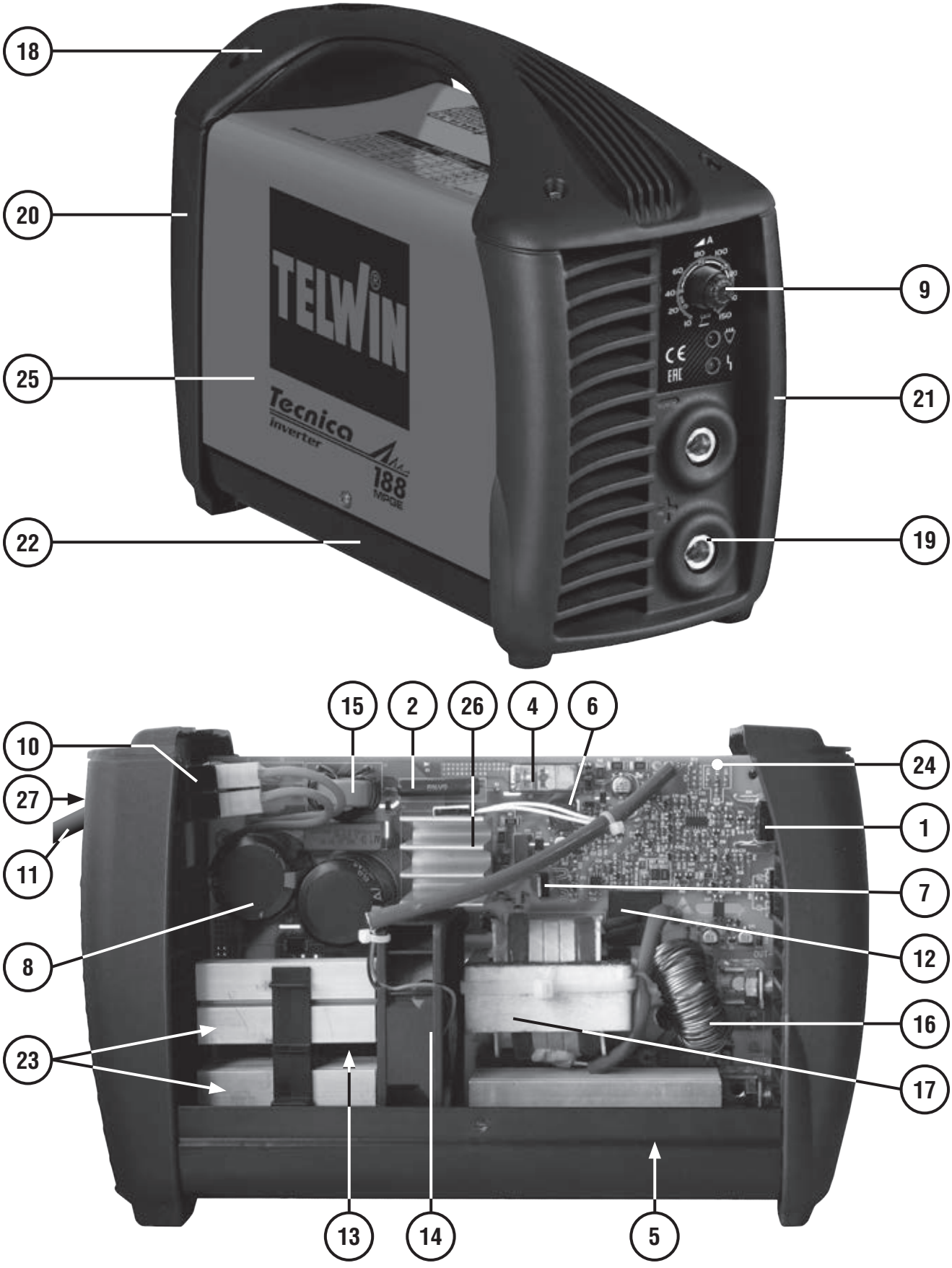

REF.	ELENCO PEZZI DI RICAMBIO PIECES DETACHEES SPARE PARTS LIST ERSATZTEILLISTE PIEZAS DE REPUESTO	CODICE CODE KODE
1	Pot. Carb. 10k lin. 0.20w 20% Pot. Carb. 10k lin. 0.20w 20% Pot. Carb. 10k lin. 0.20w 20% Pot. Carb. 10k lin. 0.20w 20% Pot. Carb. 10k lin. 0.20w 20%	112017
2	Res. Filo 47r 8w 5% Res. Fil 47r 8w 5% Res. Wire 47r 8w 5% Res. Draht 47r 8w 5% Res. Hilo 47r 8w 5%	112048
4	Rele' Relais Relais Relais Relais	116320
5	Diodo Diode Diode Diode Diodo	116839
6	Induttanza Inductance Inductance Drossel Induccion	116848
7	Mosfet n-ch Mosfet n-ch Mosfet n-ch Mosfet n-ch Mosfet n-ch	116849
8	Condensatore Condensateur Condenser Kondensator Condensator	116926
9	Manopola Poignee Knob Griff Manija	121395
10	Interruttore Interrupteur Switch Schalter Interruptor	122381
11	Cavo alim. 3g1.5 2 M spina schuko Cable alim. 3g1.5 2 M fiche schuko Mains cable 3g1.5 2 M schuko plug Netzkabel 3g1.5 2 M schuko stecker Cable alim. 3g1.5 2 M espina schuko	132155
12	Trasformatore di corrente Transformateur de courant Current transformer Stromwandler Transformador de corriente	152230
13	Trasformatore impulsi Transformateur d'impulsions Impulse transformer Impuls-transformator Transformador de impulsos	152247
14	Ventilatore Ventilateur Fan Ventilator Ventilador	152904
15	Induttanza filtro Inductance filter Filter inductance Filter drossel Induccion filtro	164741
16	Induttanza Inductance Inductance Drossel Induccion	169907
17	Trasformatore potenza Transformateur puissance Power transformer Leistungstransformator Transformador potencia	169665
18	Assieme manico Set poignee Handle set Handgriff set Set manija	312434
19	Frontale Partie frontal Front panel Geraetefront Frontal	322950
20	Retro Partie arriere Back panel Rueckseite Trasera	322951
21	Presa atlas 25mmq Prise atlas 25mmq Socket atlas 25mmq Steckdose atlas 25mmq Enchufe atlas 25mmq	712000
22	Kit fondo Kit chassis Bottom kit Basis bodenteil Kit fondo	980345
23	Kit igbt + diodo Kit igbt + diode Kit igbt + diode Kit igbt + diode Kit igbt + diodo	980614
24	Kit scheda completa Kit fiche complete Complete pcb kit Komplette karte kit Kit tarjeta completa	981024
25	Kit mantello Kit capot Cover kit Deckelkit Kit panel de cobertura	981025
26	Kit ponte + termostato Kit pont + thermostat Bridge + thermal switch kit Bruecke + thermostat kit Kit puente + termostato	981030
31	Copri interruttore Couvre interrupteur Switch cover Schalterdeckel Cubre interruptor	122353

Schema elettrico, Schéma électrique, Diagram, Schaltplan, Esquema de conexiones.

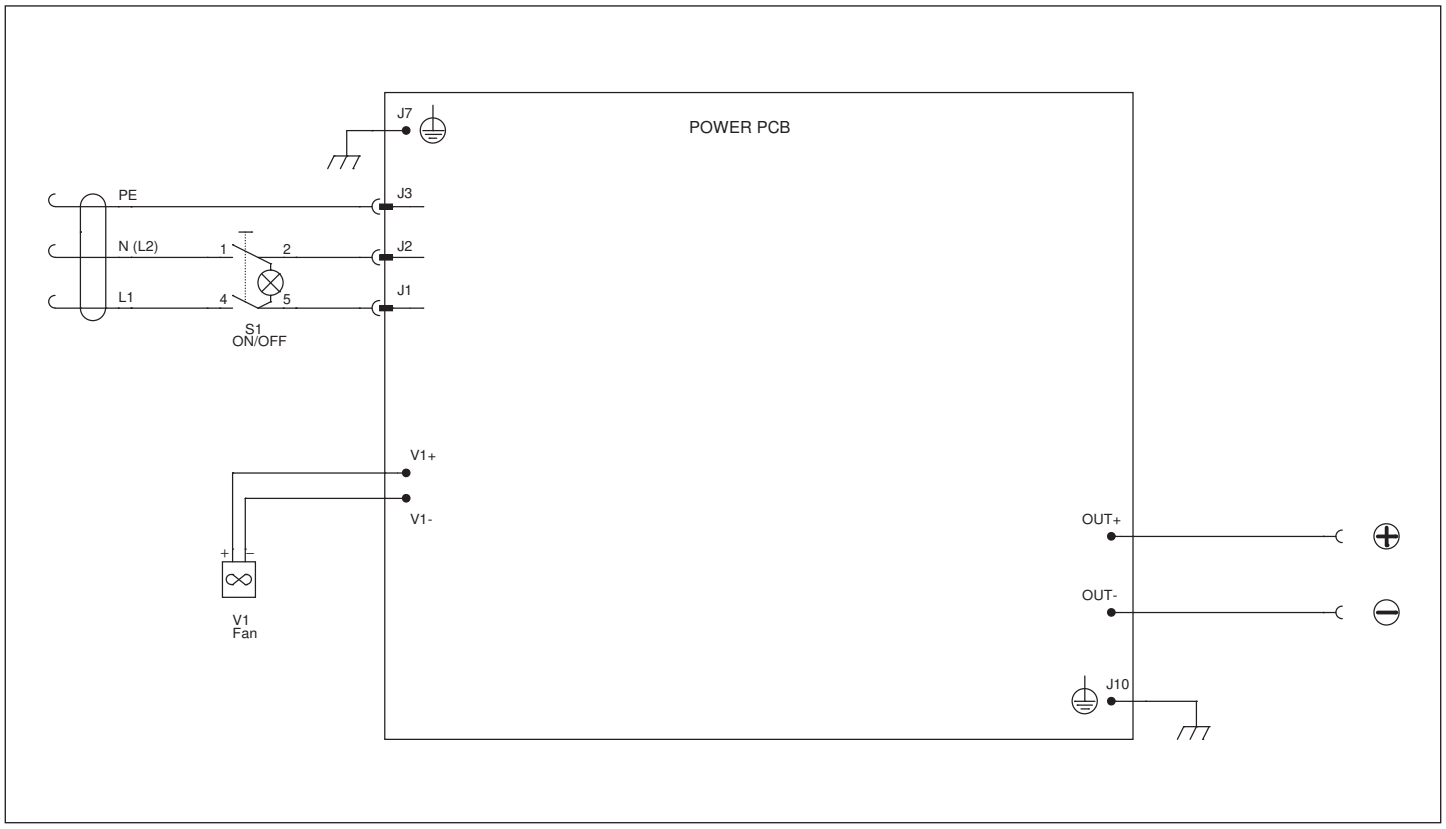

ELENCO PEZZI DI RICAMBIO
LISTE PIECES DETACHEES
SPARE PARTS LIST
ERSATZTEILLISTE
PIEZAS DE REPUESTO

TECHNOLOGY 186 XT MPGE

Esploso macchina, Dessin appareil, Machine drawing, Explosions Zeichnung des Geräts, Diseño seccionado maquina.



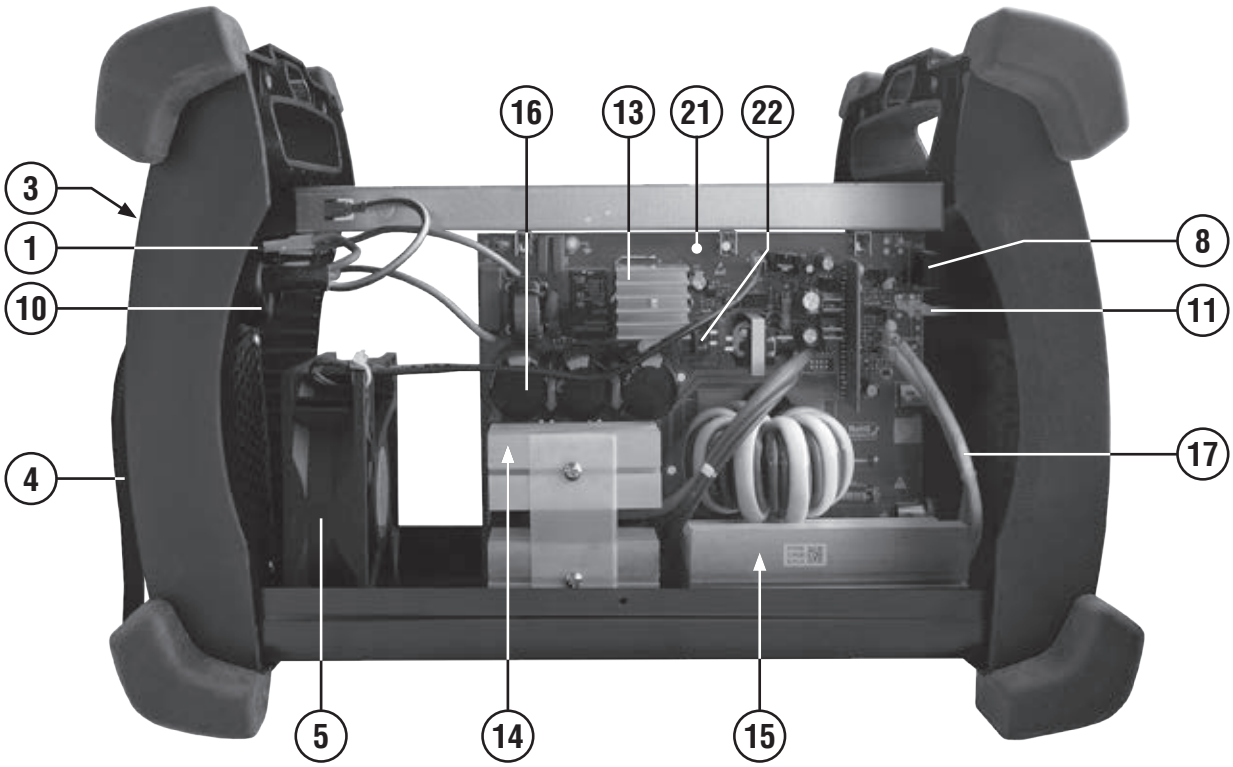

REF.	ELENCO PEZZI DI RICAMBIO PIECES DETACHEES SPARE PARTS LIST ERSATZTEILLISTE PIEZAS DE REPUESTO	CODICE CODE KODE
1	Interruttore Interrupteur Switch Schalter Interruptor	121248
2	Manopola Poigne Knob Griff Manjia	121394
3	Copri interruttore Couvre interrupteur Switch cover Schalterdeckel Cubre interruptor	122353
4	Cavo alim. H07rn-f 3g02.50 L=02.30 Cable alim. H07nn-f 3g02.50 L=02.30 Mains cable h07rn-f 3g02.50 L=02.30 Netzkabel h07rn-f 3g02.50 L=02.30 Cable alim. H07rn-f 3g02.50 L=02.30	132389
5	Ventilatore Ventilateur Fan Ventilator Ventilador	152290
6	Frontale bumpers Partie frontal bumpers Bumpers front panel Bumpers gerätefront Frontal bumpers	323108
7	Retro bumpers Partie arriere bumpers Bumpers back panel Bumpers rückseite Trasera bumpers	323107
8	Pot. Carb. 1k lin. 0.20w 10% Pot. Carb. 1k lin. 0.20w 10% Pot. Carb. 1k lin. 0.20w 10% Pot. Carb. 1k lin. 0.20w 10% Pot. Carb. 1k lin. 0.20w 10%	111487
10	Kit pressacavo + ghiera Kit presse cable + embout Kit cable bushing + ring nut Kit kabelhalter + nutmutter Kit prensa cable + virola	990046
11	Guida luce Guide Guide Führung Guia	322898
12	Manico Poignee Handle Handgriff Manija	635010
13	Kit ponte monofase Kit pont monophase Single phase bridge kit Einfasige brücke kit Kit puente monofasico	981581
14	Kit igbt + diodi Kit igbt + diodes Kit igbt + diodes Kit igbt + dioden Kit igbt + diodos	981582
15	Kit diodi Kit diodes Diode kit Diode kit Kit diodo	981583
16	Kit condensatore snap-in Kit condensateur snap-in Condenser kit snap-in Kondensator kit snap-in Kit condensator snap-in	981584
17	Kit cablaggio ntc Kit cable ntc Ntc cable kit Ntc kabel kit Kit cable ntc	981586
18	Kit prese atlas 50mmq Kit prises atlas 50mmq Atlas sockets kit 50mmq Atlas steckdose kit 50mmq Kit enchufes atlas 50mmq	981878
19	Kit mantello Kit capot Cover kit Deckel kit Kit panel de cobertura	982118
20	Kit fondo Kit chassis Bottom kit Bodenteil kit Kit fondo	982121
21	Kit scheda potenza Kit carte puissance Power board kit Leistungskartekit Kit tarjeta potencia	982122
22	Kit mosfet flyback Kit mosfet flyback Mosfet flyback kit Mosfet flyback kit Kit mosfet flyback	982126

Schema elettrico, Schéma électrique, Diagram, Schaltplan, Esquema de conexiones.

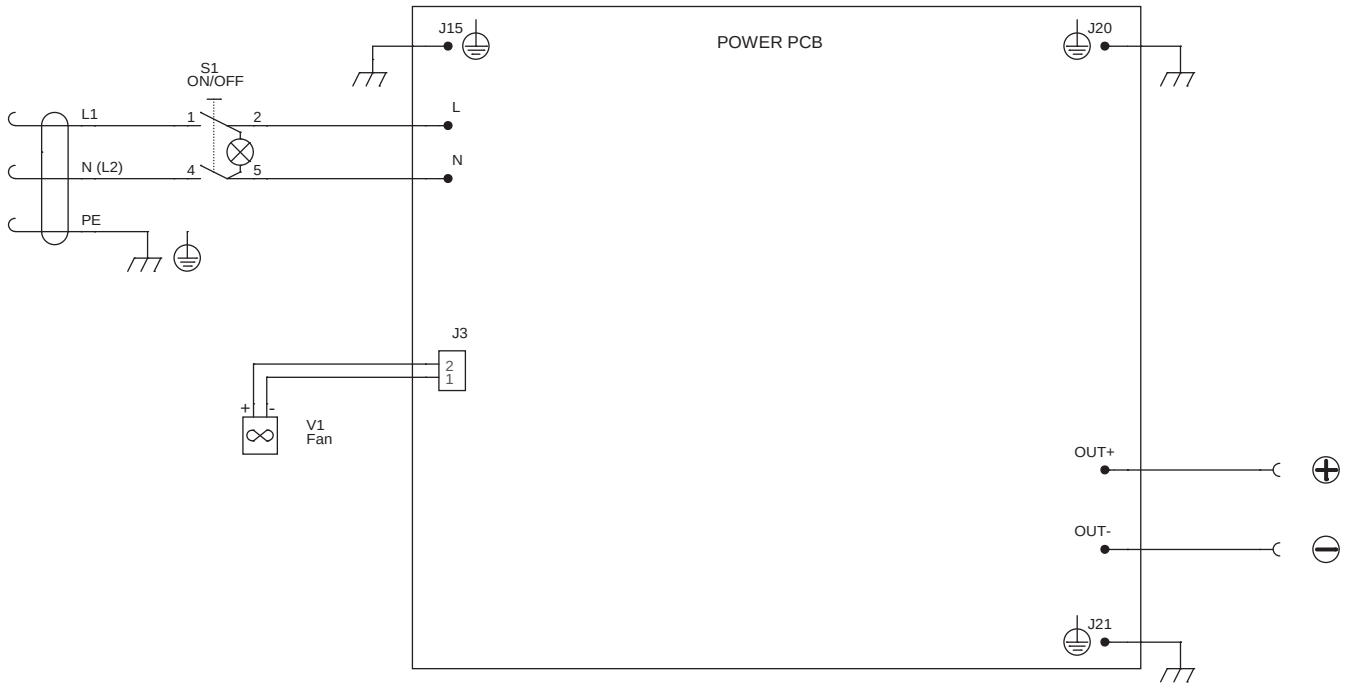

ELENCO PEZZI DI RICAMBIO
LISTE PIECES DETACHEES
SPARE PARTS LIST
ERSATZTEILLISTE
PIEZAS DE REPUESTO

TECHNOLOGY 236 XT

Esploso macchina, Dessin appareil, Machine drawing, Explosions Zeichnung des Geräts, Diseño seccionado maquina.



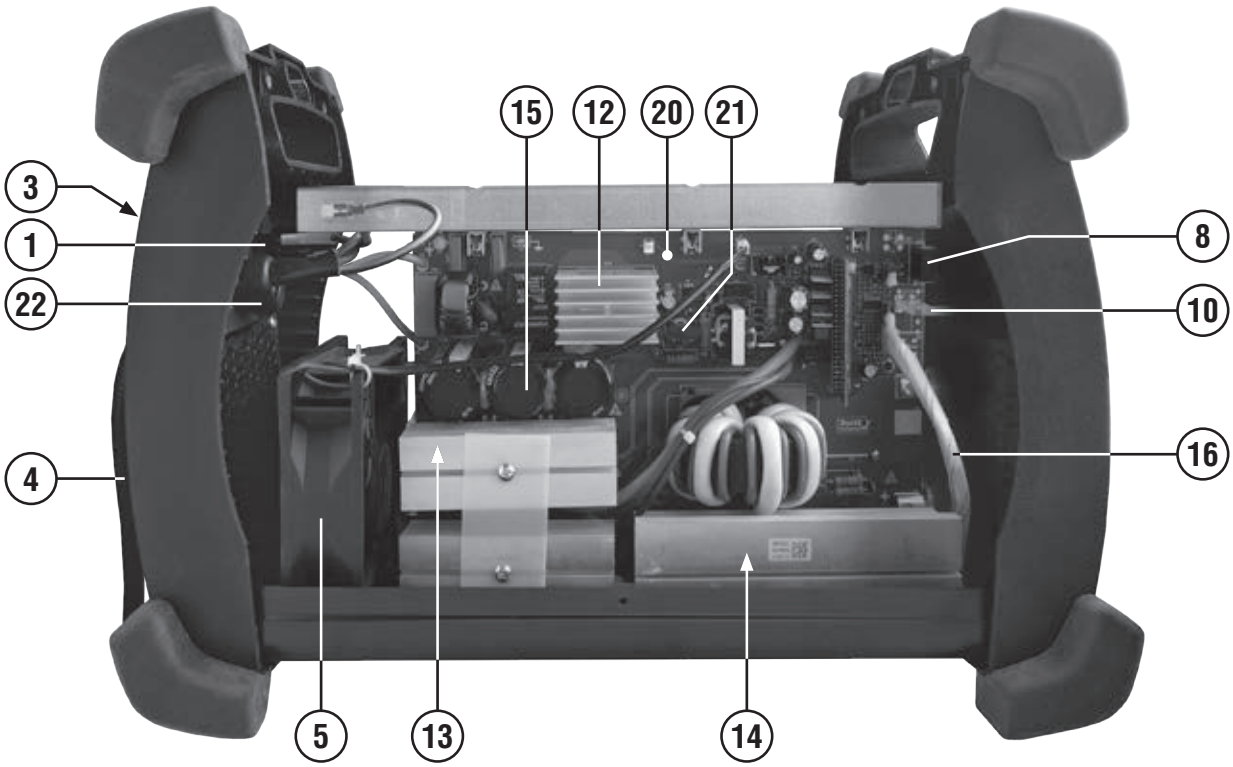

REF.	ELENCO PEZZI DI RICAMBIO PIECES DETACHEES SPARE PARTS LIST ERSATZTEILLISTE PIEZAS DE REPUESTO	CODICE CODE KODE
1	Interruttore Interrupteur Switch Schalter Interruptor	121248
2	Manopola Poigne Knob Griff Manjia	121394
3	Copri interruttore Couvre interrupteur Switch cover Schalterdeckel Cubre interruptor	122353
4	Cavo alim. 3g04.00 2.00 M Cable alim. 3g04.00 2.00 M Mains cable 3g04.00 2.00 M Netzkabel 3g04.00 2.00 M Cable alim. 3g04.00 2.00 M	132345
5	Ventilatore Ventilateur Fan Ventilator Ventilador	152290
6	Frontale bumpers Partie frontal bumpers Bumpers front panel Bumpers gerätefront Frontal bumpers	323108
7	Retro bumpers Partie arriere bumpers Bumpers back panel Bumpers rückseite Trasera bumpers	323107
8	Pot. Carb. 1k lin. 0.20w 10% Pot. Carb. 1k lin. 0.20w 10% Pot. Carb. 1k lin. 0.20w 10% Pot. Carb. 1k lin. 0.20w 10% Pot. Carb. 1k lin. 0.20w 10%	111487
10	Guida luce Guide Guide Führung Guia	322898
11	Manico Poignee Handle Handgriff Manija	635010
12	Kit ponte monofase Kit pont monophase Single phase bridge kit Einfasige brücke kit Kit puente monofasico	981581
13	Kit igbt + diodi Kit igbt + diodes Kit igbt + diodes Kit igbt + dioden Kit igbt + diodos	981582
14	Kit diodi Kit diodes Diode kit Diode kit Kit diodo	981583
15	Kit condensatore snap-in Kit condensateur snap-in Condenser kit snap-in Kondensator kit snap-in Kit condensator snap-in	981584
16	Kit cablaggio ntc Kit cable ntc Ntc cable kit Ntc kabel kit Kit cable ntc	981586
17	Kit prese atlas 50mmq Kit prises atlas 50mmq Atlas sockets kit 50mmq Atlas steckdose kit 50mmq Kit enchufes atlas 50mmq	981878
18	Kit mantello Kit capot Cover kit Deckel kit Kit panel de cobertura	982119
19	Kit fondo Kit chassis Bottom kit Bodenteil kit Kit fondo	982121
20	Kit scheda potenza Kit carte puissance Power board kit Leistungskartekit Kit tarjeta potencia	982123
21	Kit mosfet flyback Kit mosfet flyback Mosfet flyback kit Mosfet flyback kit Kit mosfet flyback	982126
22	Kit pressacavo + ghiera Kit presse cable + embout Kit cable bushing + ring nut Kit kabelhalter + nutmutter Kit prensa cable + virola	990046

REF.	ELENCO PEZZI DI RICAMBIO PIECES DETACHEES SPARE PARTS LIST ERSATZTEILLISTE PIEZAS DE REPUESTO	CODICE CODE KODE

ELENCO PEZZI DI RICAMBIO
LISTE PIECES DETACHEES
SPARE PARTS LIST
ERSATZTEILLISTE
PIEZAS DE REPUESTO

TECHNOLOGY 238 XT CE/MPGE

Esploso macchina, Dessin appareil, Machine drawing, Explosions Zeichnung des Geräts, Diseño seccionado maquina.



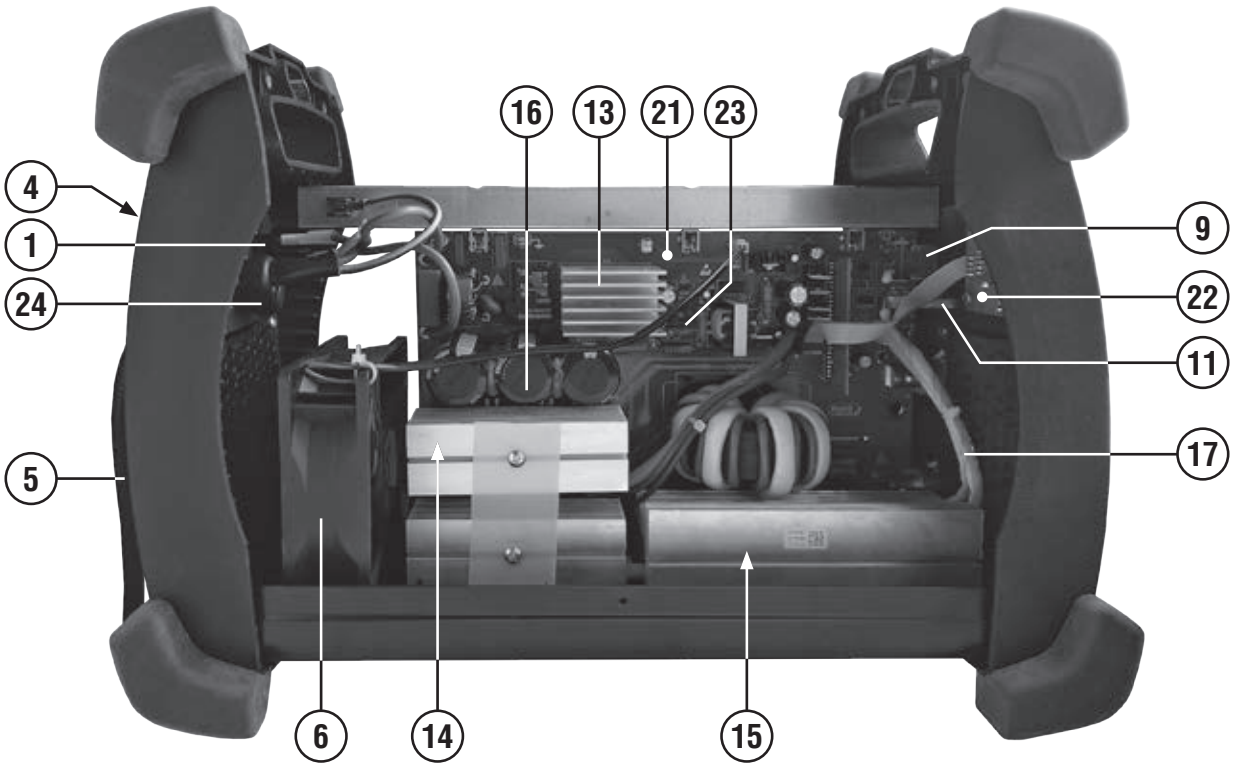

REF.	ELENCO PEZZI DI RICAMBIO PIECES DETACHEES SPARE PARTS LIST ERSATZTEILLISTE PIEZAS DE REPUESTO	CODICE CODE KODE
1	Interruttore Interrupteur Switch Schalter Interruptor	121248
2	Manopola Poigne Knob Griff Manjia	121394
3	Manopola Poignee Knob Griff Manija	121751
4	Copri interruttore Couvre interrupteur Switch cover Schalterdeckel Cubre interruptor	122353
5	Cavo alim. 3g04.00 2.00 M Cable alim. 3g04.00 2.00 M Mains cable 3g04.00 2.00 M Netzkabel 3g04.00 2.00 M Cable alim. 3g04.00 2.00 M	132345
6	Ventilatore Ventilateur Fan Ventilator Ventilador	152290
7	Frontale bumpers Partie frontal bumpers Bumpers front panel Bumpers gerätefront Frontal bumpers	323108
8	Retro bumpers Partie arriere bumpers Bumpers back panel Bumpers rückseite Trasera bumpers	323107
9	Pot. Carb. 1k lin. 0.20w 10% Pot. Carb. 1k lin. 0.20w 10% Pot. Carb. 1k lin. 0.20w 10% Pot. Carb. 1k lin. 0.20w 10% Pot. Carb. 1k lin. 0.20w 10%	111487
11	Guida luce Guide Guide Führung Guia	322898
12	Manico Poignee Handle Handgriff Manija	635010
13	Kit ponte monofase Kit pont monophase Single phase bridge kit Einfasige brücke kit Kit puente monofasico	981581

REF.	ELENCO PEZZI DI RICAMBIO PIECES DETACHEES SPARE PARTS LIST ERSATZTEILLISTE PIEZAS DE REPUESTO	CODICE CODE KODE
14	Kit igbt + diodi Kit igbt + diodes Kit igbt + diodes Kit igbt + dioden Kit igbt + diodos	981582
15	Kit diodi Kit diodes Diode kit Diode kit Kit diodo	981583
16	Kit condensatore snap-in Kit condensateur snap-in Condenser kit snap-in Kondensator kit snap-in Kit condensator snap-in	981584
17	Kit cablaggio ntc Kit cable ntc Ntc cable kit Ntc kabel kit Kit cable ntc	981586
18	Kit prese atlas 50mmq Kit prises atlas 50mmq Atlas sockets kit 50mmq Atlas steckdose kit 50mmq Kit enchufes atlas 50mmq	981878
19	Kit mantello Kit capot Cover kit Deckel kit Kit panel de cobertura	982120
20	Kit fondo Kit chassis Bottom kit Bodenteil kit Kit fondo	982121
21	Kit scheda potenza Kit carte puissance Power board kit Leistungskartekit Kit tarjeta potencia	982124
22	Kit scheda switch Kit platine switch Switch card kit Switch karte kit Kit tarjeta switch	982125
23	Kit mosfet flyback Kit mosfet flyback Mosfet flyback kit Mosfet flyback kit Kit mosfet flyback	982126
24	Kit pressacavo + ghiera Kit presse cable + embout Kit cable bushing + ring nut Kit kabelhalter + nutmutter Kit prensa cable + virola	990046

REF.	ELENCO PEZZI DI RICAMBIO PIECES DETACHEES SPARE PARTS LIST ERSATZTEILLISTE PIEZAS DE REPUESTO	CODICE CODE KODE

Schema elettrico, Schéma électrique, Diagram, Schaltplan, Esquema de conexiones.

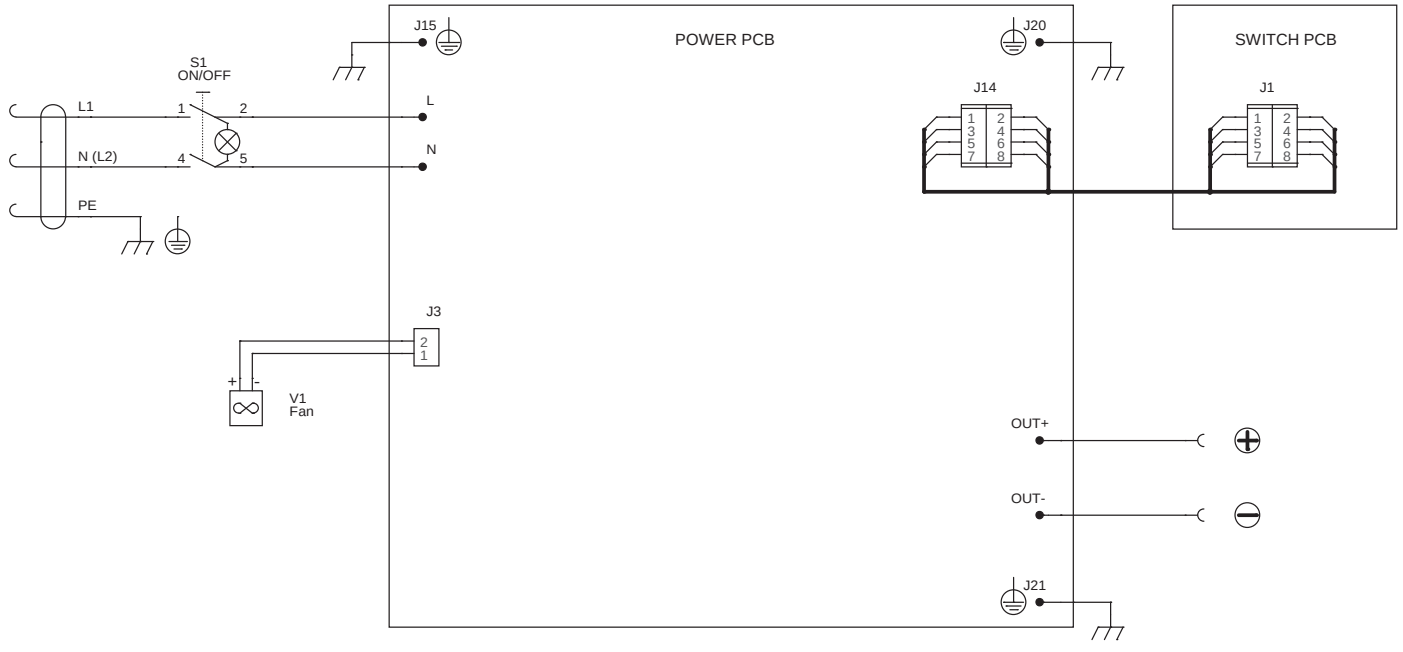

ELENCO PEZZI DI RICAMBIO
LISTE PIECES DETACHEES
SPARE PARTS LIST
ERSATZTEILLISTE
PIEZAS DE REPUESTO

SUPERIOR 250

Esploso macchina, Dessin appareil, Machine drawing, Explosions Zeichnung des Geräts, Diseño seccionado maquina.

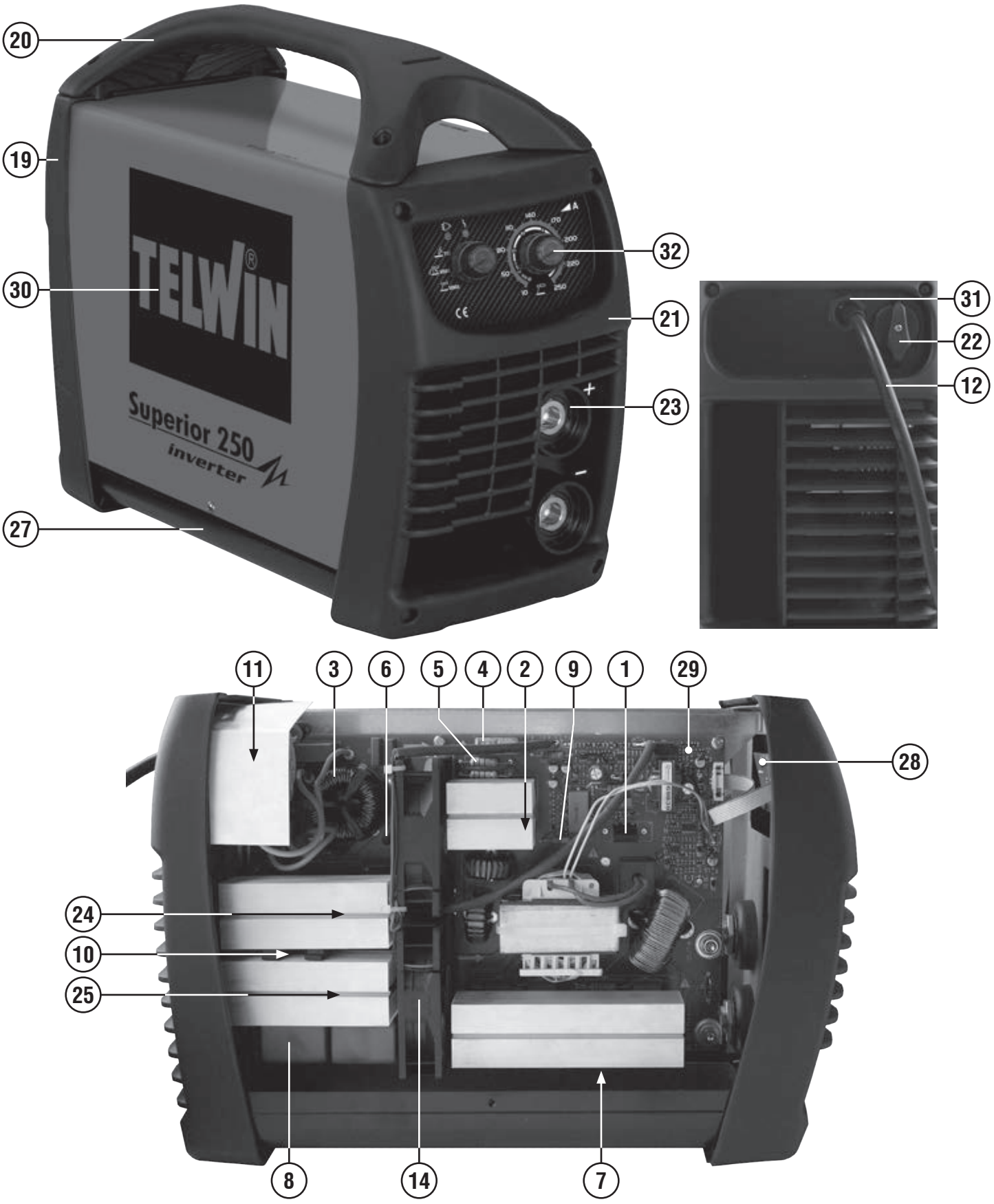

REF.	ELENCO PEZZI DI RICAMBIO PIECES DETACHEES SPARE PARTS LIST ERSATZTEILLISTE PIEZAS DE REPUESTO	CODICE CODE KODE
1	Igbt Igbt Igbt Igbt Igbt	111095
2	Ponte monofase Pont monophase Single phase bridge Einfasige brücke Puente monofasico	111259
3	Induttanza filtro Inductance filtre Filter inductor Filterdrossel Filtro induccion	111434
4	Rele' Relais Relais Relais Relais	116320
5	Resistenza Resistance Resistance Widerstand Resistencia	116752
6	Varistore Varistor Varistor Varistor Varistor	116760
7	Diodo Diode Diode Diode Diodo	116839
8	Condensatore Condensateur Condenser Kondensator Condensator	116882
9	Res. Met. 10r 2w 5% fuse Res. Met. 10r 2w 5% fuse Res. Met. 10r 2w 5% fuse Res. Met. 10r 2w 5% fuse Res. Met. 10r 2w 5% fuse	116962
10	Termostato Thermostat Thermostat Thermostat Termostato	121546
11	Commutatore Commutateur Switch Schalter Switch	121556
12	Cavo alim. 4g1.5 2 M Cable alim. 4g1.5 2 M Mains cable 4g1.5 2 M Netzkabel 4g1.5 2 M Cable alim. 4g1.5 2 M	132237
14	Ventilatore Ventilateur Fan Ventilator Ventilador	152904
19	Retro Partie arriere Back panel Rueckseite Trasera	321127
20	Manico Poignee Handle Handgriff Manija	321128
21	Frontale Partie frontal Front panel Gerätefront Frontal	321235
22	Assieme manopola per commutatore Set poigne pour commutateur Switch knob set Umschaltergriff set Set manjia para conmutador	323101
23	Presa atlas 50mmq Prise atlas 50mmq Atlas socket 50mmq Atlas steckdose 50mmq Enchufe atlas 50mmq	712036
24	Kit igbt + diodo Kit igbt + diode Igbt + diode kit Igbt + diode kit Kit igbt + diodo	981183
25	Kit trasformatore impulsi Kit transformateur d'impulsions Impulse transformer kit Impuls-transformator kit Kit transformador de impulsos	981372
27	Kit fondo Kit chassis Bottom kit Bodenteil kit Kit fondo	981438
28	Scheda pannello Platine frontal Front panel card Gerätefrontskarte Tarjeta frontal	981835
29	Kit scheda potenza Kit carte puissance Power board kit Leistungskartekit Kit tarjeta potencia	981836
30	Kit mantello Kit capot Cover kit Deckel kit Kit panel de cobertura	981837
31	Kit pressacavo + ghiera Kit presse cable + embout Kit cable bushing + ring nut Kit kabelhalter + nutmutter Kit prensa cable + virola	990046
32	Kit potenziometro + manopole Kit potentiometre + poignees Kit potentiometer + knobs Kit potentiometer + knopfs Kit potenciometro + mandos	982259

Schema elettrico, Schéma électrique, Diagram, Schaltplan, Esquema de conexiones.

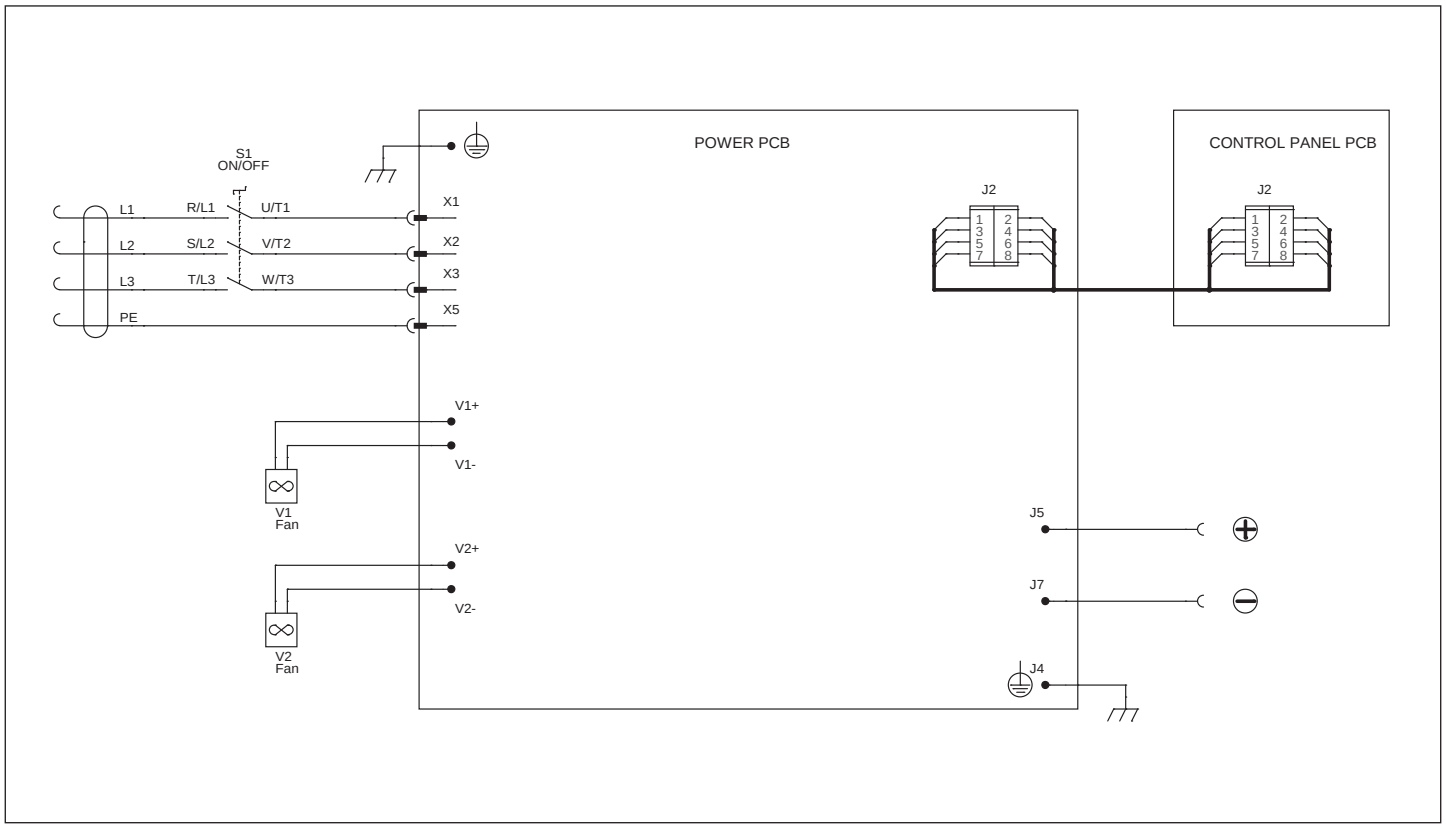

ELENCO PEZZI DI RICAMBIO
LISTE PIECES DETACHEES
SPARE PARTS LIST
ERSATZTEILLISTE
PIEZAS DE REPUESTO

SUPERIOR 320 CE VRD

TELWIN

Esploso macchina, Dessin appareil, Machine drawing, Explosions Zeichnung des Geräts, Diseño seccionado maquina.



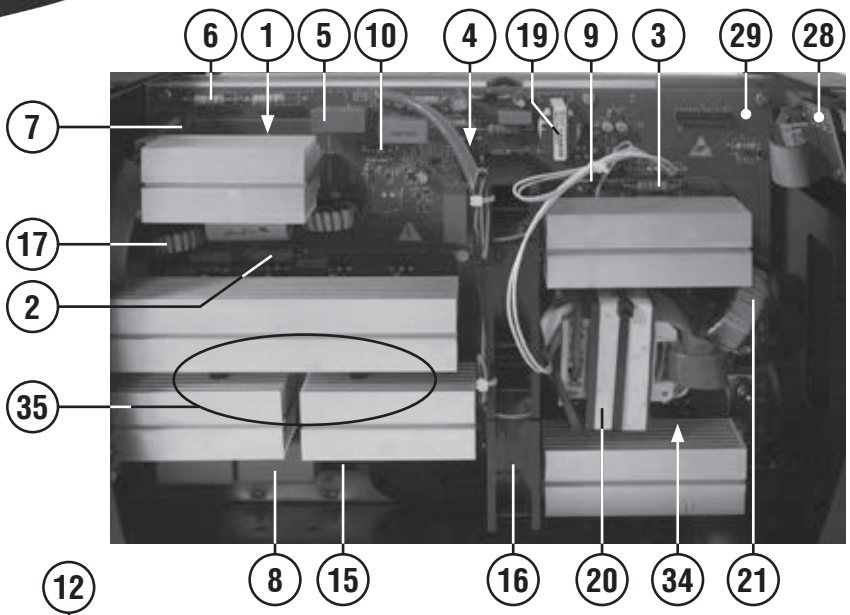

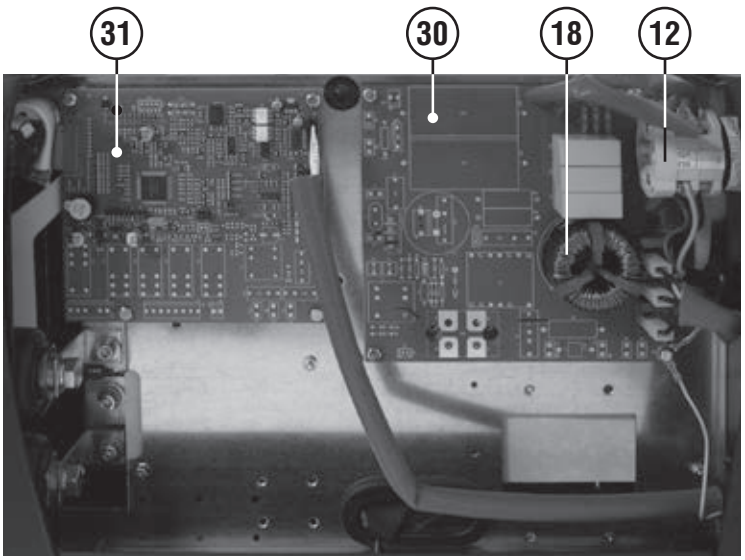

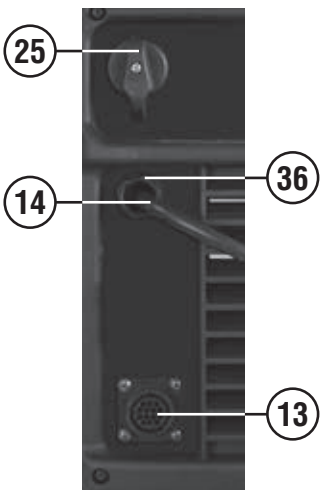

REF.	ELENCO PEZZI DI RICAMBIO PIECES DETACHEES SPARE PARTS LIST ERSATZTEILLISTE PIEZAS DE REPUESTO	CODICE CODE KODE
1	Ponte monofase Pont monophase Single phase bridge Einfasige brücke Puente monofasico	111017
2	Res. Met. 22r 5w 5% Res. Met. 22r 5w 5% Res. Met. 22r 5w 5% Res. Met. 22r 5w 5% Res. Met. 22r 5w 5%	111327
3	Res. Met. 10r 5w 5% Res. Met. 10r 5w 5% Res. Met. 10r 5w 5% Res. Met. 10r 5w 5% Res. Met. 10r 5w 5%	112374
4	Igbt Igbt Igbt Igbt Igbt	111094
5	Rele' Relais Relais Relais Relais	116320
6	Resistenza Resistance Resistance Widerstand Resistencia	116752
7	Varistore Varistor Varistor Varistor Varistor	116760
8	Condensatore Condensateur Condenser Kondensator Condensator	116882
9	Soppressore di tensione Soppresseur de tension Voltage suppressor Spannungssoppressor Sopresor de tension	116935
10	Res. Met. 10r 2w 5% fuse Res. Met. 10r 2w 5% fuse Res. Met. 10r 2w 5% fuse Res. Met. 10r 2w 5% fuse Res. Met. 10r 2w 5% fuse	116962
11	Manopola per potenziometro Poignee pour potentiometre Potentiometer knob Potentiometergriff Manija por potenciometro	121547
12	Commutatore Commutateur Switch Schalter Switch	121556
13	Cablaggio controllo/c.A.D. Cable de controle/c.A.D. Control cable/c.A.D. Kontrolkabel/c.A.D. Cable de control/c.A.D.	124105
14	Cavo alim. 4g1.5 2 M Cable alim. 4g1.5 2 M Mains cable 4g1.5 2 M Netzkabel 4g1.5 2 M Cable alim. 4g1.5 2 M	132237
15	Trasformatore di corrente Transformateur de courant Current transformer Stromwandler Transformador de corriente	152230
16	Ventilatore Ventilateur Fan Ventilator Ventilador	152269
17	Induttanza Inductance Inductance Drossel Induccion	169746
18	Induttanza filtro Inductance filtre Filter inductor Filterdrossel Filtro induccion	169747
19	Trasfo flyback aux Trasfo flyback aux Trasfo flyback aux Trasfo flyback aux Trasfo flyback aux	169838
20	Trasformatore potenza Transformateur de puissance Power trafo Leistungstransformer Transformador de potencia	169842
21	Induttanza Inductance Inductance Drossel Induccion	169847
22	Frontale Partie frontal Front panel Geraetefront Frontal	321117
23	Retro Partie arriere Back panel Rueckseite Trasera	321118
24	Manico Poignee Handle Handgriff Manija	321119
25	Assieme manopola per commutatore Set poigne pour commutateur Switch knob set Umschaltergriff set Set manija para conmutador	323101
26	Presa atlas 50mmq Prise atlas 50mmq Atlas socket 50mmq Atlas steckdose 50mmq Enchufe atlas 50mmq	712036
27	Kit fondo Kit chassis Bottom kit Bodenteil kit Kit fondo	981408
28	Kit scheda pannello Kit platine frontal Kit front panel card Kit geraetefrontskarte Kit tarjeta frontal	981535
29	Kit scheda potenza Kit platine puissance Power board kit Leistungskartekit Kit tarjeta de potencia	981567
30	Kit scheda filtro Kit platine filtre Filter card kit Filterkartekit Kit tarjeta filtro	981678
31	Kit scheda controllo Kit fiche de controle Control pcb kit Kontrollekarte kit Kit tarjeta de controlo	981569
32	Kit scheda keypad Kit module keypad Pcb kit keypad Steuerungskit keypad Kit tarjeta keypad	981570
33	Kit mantello Kit capot Cover kit Deckelkit Kit panel de cobertura	981571
34	Kit diodi Kit diodes Diode kit Diode kit Kit diodo	981632
35	Kit igbt + trasformatore impulsi Kit igbt + transformateur d'impulsions Kit igbt + impulse transformer Kit igbt + impuls-transformator Kit igbt + transformador de impulsos	981633
36	Kit pressacavo + ghiera Kit presse cable + embout Kit cable bushing + ring nut Kit kabelhalter + nutmutter Kit prensa cable + virola	990046

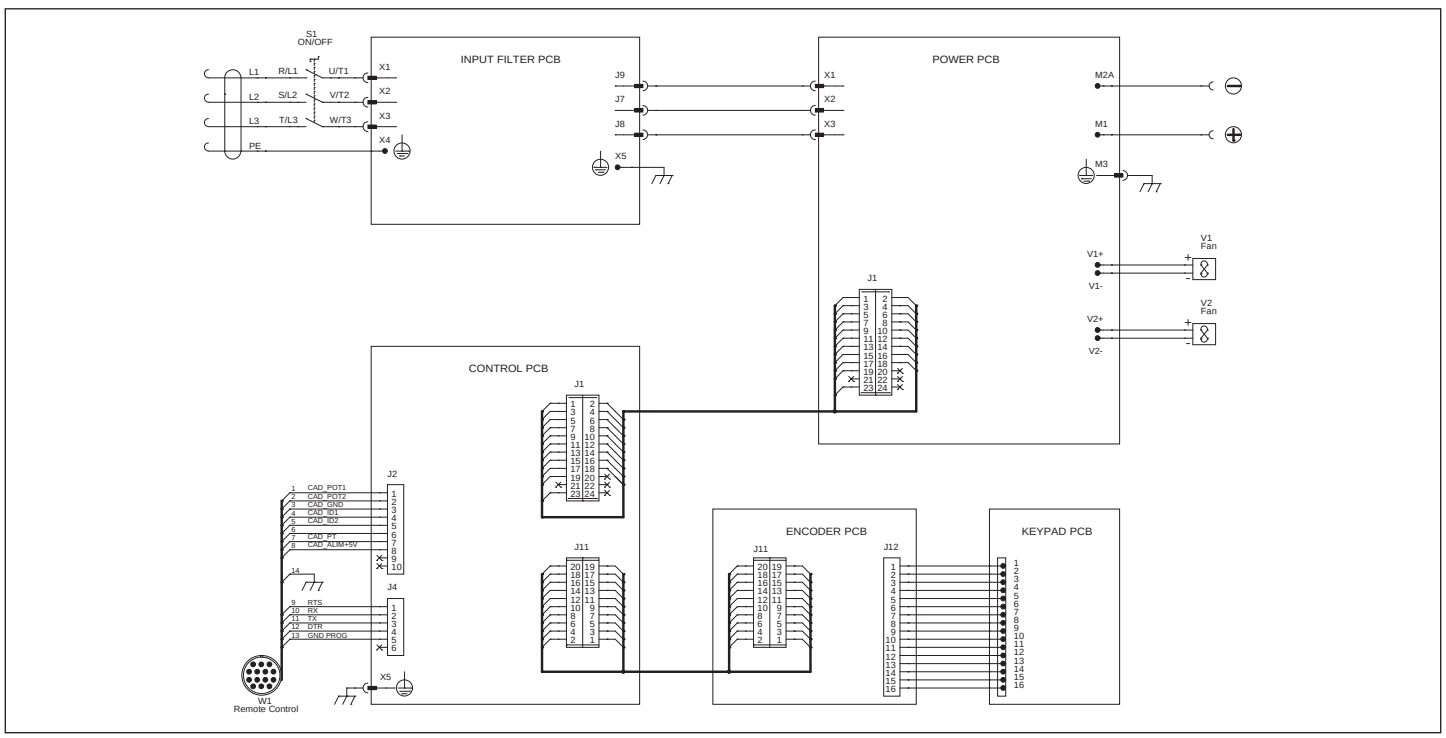

ELENCO PEZZI DI RICAMBIO
LISTE PIECES DETACHEES
SPARE PARTS LIST
ERSATZTEILLISTE
PIEZAS DE REPUESTO

SUPERIOR 400 CE VRD

TELWIN

Esploso macchina, Dessin appareil, Machine drawing, Explosions Zeichnung des Geräts, Diseño seccionado maquina.

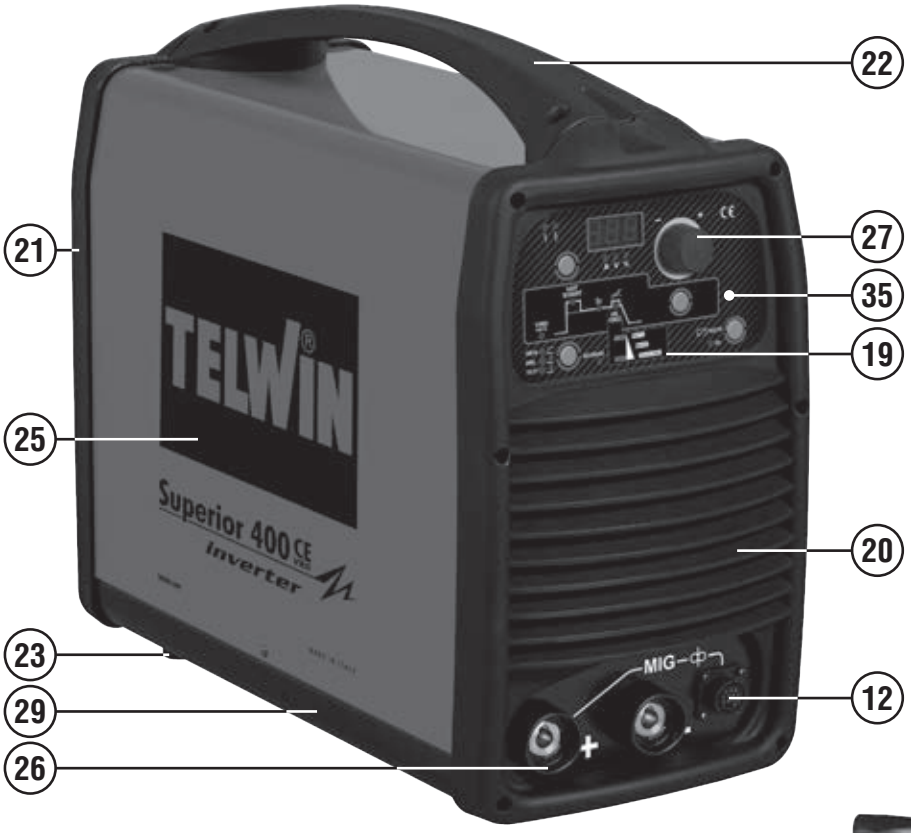

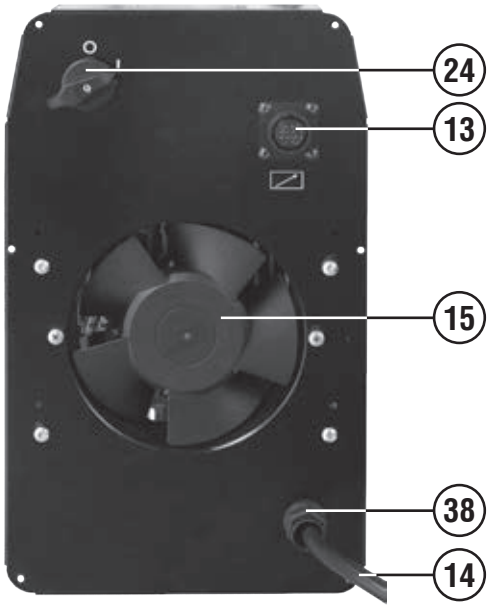

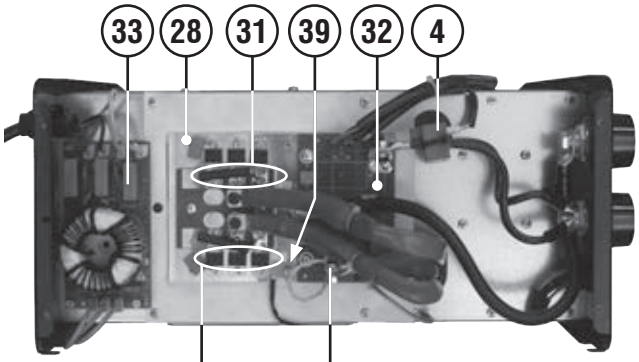

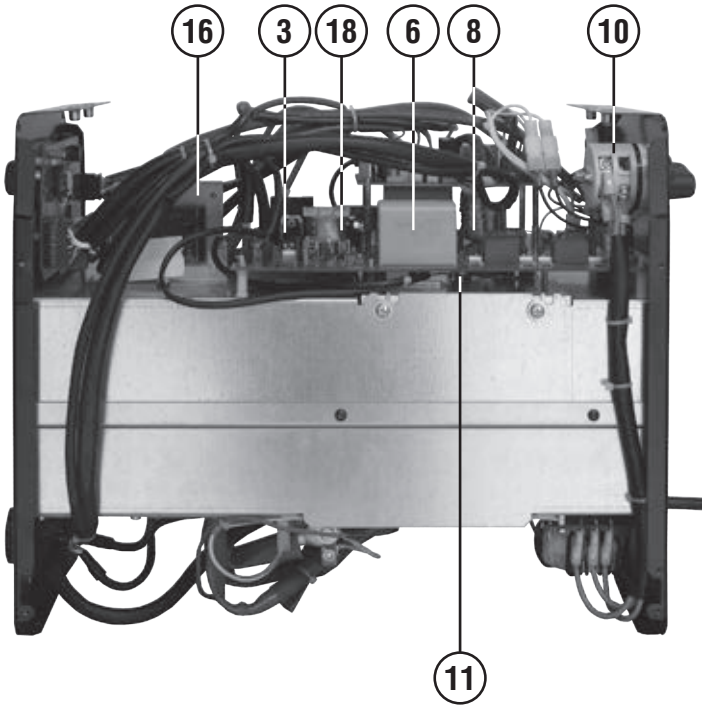

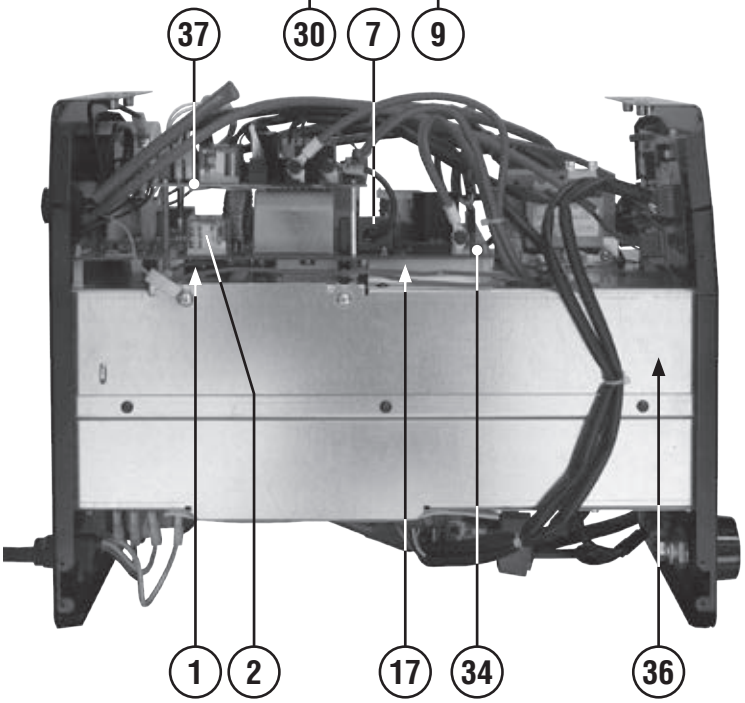

REF.	ELENCO PEZZI DI RICAMBIO PIECES DETACHEES SPARE PARTS LIST ERSATZTEILLISTE PIEZAS DE REPUESTO	CODICE CODE KODE
1	Ponte Pont Bridge Brücke Puente	111465
2	Rele' Relais Relais Relais Relais	113233
3	Igbt Igbt Igbt Igbt Igbt	111094
4	Sensore di hall Sensor hall Hall sensor Hall sensor Sensor de hall	112381
6	Condensatore Condensateur Condenser Kondensator Condensator	116740
7	Sensore hall Sensor hall Hall sensor Hall sensor Sensor de hall	116744
8	Induttanza Inductance Inductance Drossel Induccion	116747
9	Termostato Thermostat Thermostat Thermostat Termostato	121638
10	Commutatore Commutateur Switch Schalter Conmutador	122017
11	Termostato Thermostat Thermal switch Thermostat Termostato	122571
12	Cablaggio connettore traino Cable connecteur devidoir Wire feeder connector cable Drahtvorschub anschlusskabel Cable conectador alimentador de hilo	124672
13	Cablaggio controllo/c.A.D. Cable de controle/c.A.D. Control cable/c.A.D. Kontrolkabel/c.A.D. Cable de control/c.A.D.	124757
14	Cavo alim. 4g2.5 2 M Cable alim. 4g2.5 2 M Mains cable 4g2.5 2 M Netzkabel 4g2.5 2 M Cable alim. 4g2.5 2 M	132026
15	Ventilatore Ventilateur Fan Ventilator Ventilador	152000
16	Kit autotrasfo Kit autotrasfo Autotrasfo kit Autotrasfo kit Kit autotrasfo	981869
17	Induttanza Inductance Inductance Drossel Induccion	169550
18	Trasformatore Transformateur complet Transformateur complet Trafo Transformateur complet	169627
19	Pannello frontale Panneau partie frontal Front panel Geraetefront Panel frontal	314573
20	Frontale Partie frontal Front panel Geraetefront Frontal	322881
21	Retro Partie arriere Back panel Rueckseite Trasera	322882
22	Manico Poignee Handle Handgriff Manija	322883
23	Piedino Embout Foot Fuss Pie	323001
24	Assieme manopola per commutatore Set poigne pour commutateur Switch knob set Umschaltergriff set Set manjia para conmutador	323101
25	Mantello Capot Cover Deckel Panel de cobertura	656153
26	Presa atlas 50mmq Prise atlas 50mmq Atlas socket 50mmq Atlas steckdose 50mmq Enchufe atlas 50mmq	712036
27	Kit manopola nera Kit poignee noir Black knob kit Schwarze griff kit Kit manija negra	980772
28	Kit scheda secondario Kit fiche secondaire Secondary pcb kit Sekundaertrafokarte kit Kit tarjeta secundario	980814
29	Kit fondo Kit chassis Bottom kit Bodenteil kit Kit fondo	980817
30	Kit diodi Kit diodes Diode kit Diode kit Kit diodo	980819
31	Kit resistenzaa+condensatore Kit resistance+condensateur Resistance+capacitor kit Widerstand+kondensator kit Kit resistencia+condensador	980820
32	Kit scheda induttanza Kit fiche inductance Inductance card kit Drosselskarte kit Kit tarjeta induccion	981541
33	Kit scheda filtro ingresso Kit platine filtre input Input filter card kit Input filterkarte kit Kit tarjeta filtro input	981521
34	Kit scheda primario Kit fiche primaire Primary pcb kit Primaertrafokarte kit Kit tarjeta primario	981522
35	Kit pannello + scheda Kit panneau + module Panel + card kit Tafel + karte kit Kit panel + tarjeta	981523
36	Kit trasformatore potenza Kit transformateur puissance Power transformer kit Leistungstransformatorkit Kit transformador de potencia	981524
37	Kit scheda interfaccia mig Kit platine interface mig Interface card kit mig Schnittstelle karte kit mig Kit tarjeta interface mig	981525
38	Kit pressacavo Kit presse cable Cable bushing kit Kabelhalter kit Kit prensa cable	990439
39	Termostato Thermostat Thermostat Thermostat Termostato	122988

Schema elettrico, Schéma électrique, Diagram, Schaltplan, Esquema de conexiones.

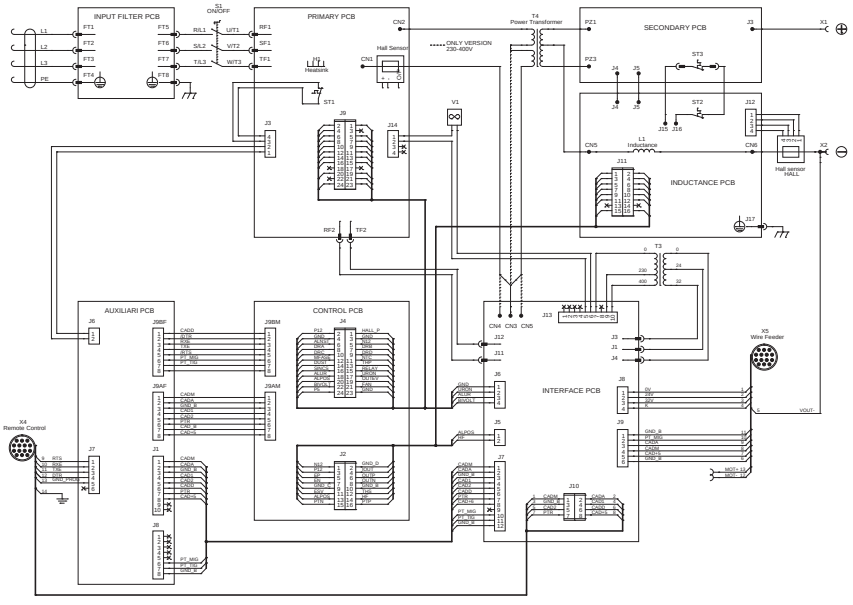

ELENCO PEZZI DI RICAMBIO
LISTE PIECES DETACHEES
SPARE PARTS LIST
ERSATZTEILLISTE
PIEZAS DE REPUESTO

SUPERIOR 630 CE VRD

Esploso macchina, Dessin appareil, Machine drawing, Explosions Zeichnung des Geräts, Diseño seccionado maquina.



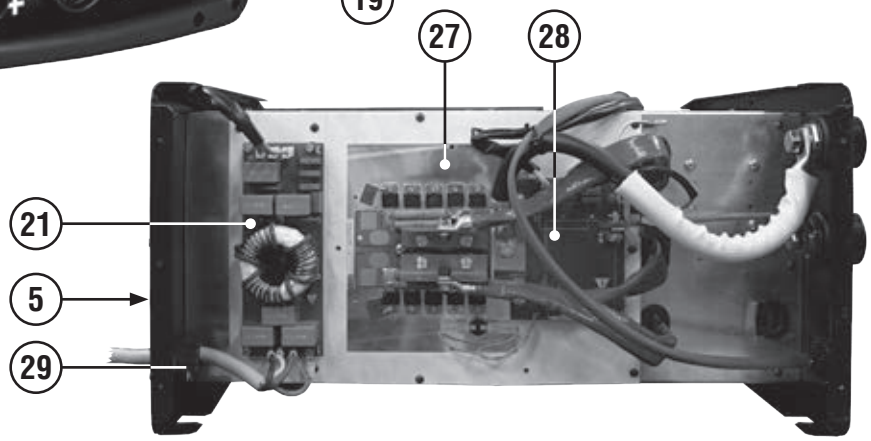

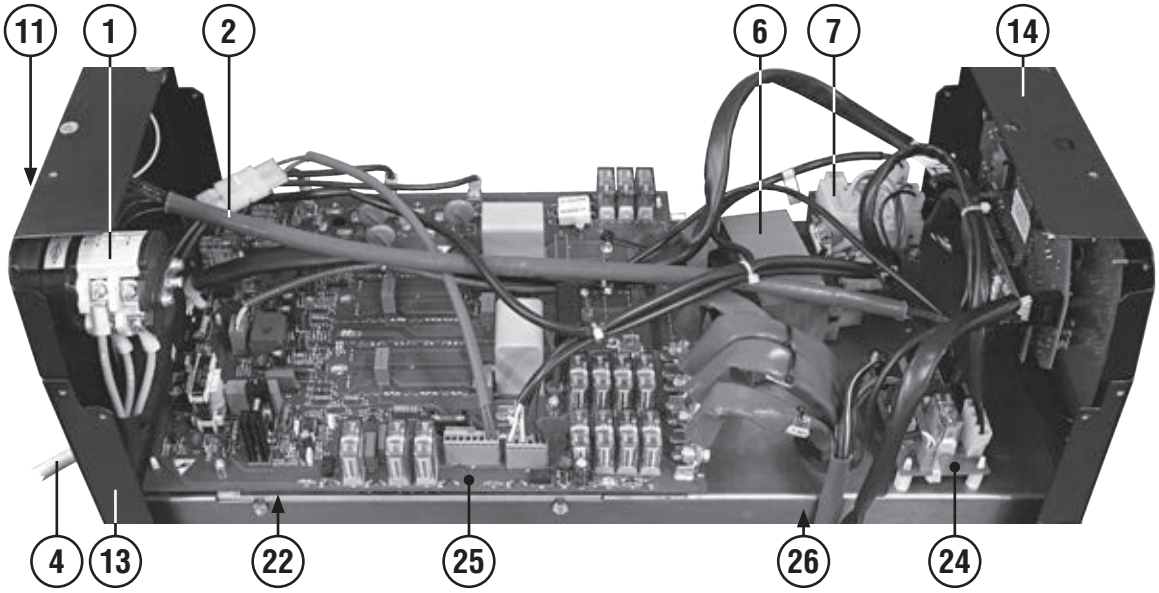

REF.	ELENCO PEZZI DI RICAMBIO PIECES DETACHEES SPARE PARTS LIST ERSATZTEILLISTE PIEZAS DE REPUESTO	CODICE CODE KODE
1	Commutatore Commutateur Switch Schalter Conmutador	121505
2	Cablaggio comando a distanza Cable pour commande a distance Cable for remote control Fernreglerkabel Cable para mando a distancia	124633
3	Cablaggio connettore traino Cable connecteur devidoir Wire feeder connector cable Drahtvorschub anschlusskabel Cable conectador alimentador de hilo	124672
4	Cavo alim. 4g06.00 L=03.00 Cable alim. 4g06.00 L=03.00 Mains cable 4g06.00 L=03.00 Netzkabel 4g06.00 L=03.00 Cable alim. 4g06.00 L=03.00	132361
5	Ventilatore Ventilateur Fan Ventilator Ventilador	152000
6	Kit autotrasfo Kit autotrasfo Autotrasfo kit Autotrasfo kit Kit autotrasfo	981869
7	Kit trasformatore ausiliario Kit transformateur auxiliaire Auxiliary transformer kit Hilfstransformatorkit Kit transformador auxiliar	981871
8	Copertura manico Capot poignee Handlecover Handgriffsdeckel Copertura manija	322848
9	Frontale Partie frontal Front panel Geraetefront Frontal	322872
10	Retro Partie arriere Back panel Rueckseite Trasera	322873
11	Assieme manopola per commutatore Set poigne pour commutateur Switch knob set Umschaltergriff set Set manjia para conmutador	323101
12	Manico Poignee Handle Handgriff Manija	641005
13	Retro Partie arriere Back panel Rueckseite Trasera	642296
14	Frontale Partie frontal Front panel Geraetefront Frontal	642300
15	Fondo Chassis Bottom Bodenteil Fondo	645447
16	Mantello Capot Cover Deckel Panel de cobertura	651149
17	Fianco destro Partie lateral droite Right side panel Rechts seitenblech Flanco derecho	656108
18	Fianco sinistro Partie lateral gauche Left side panel Links seitenblech Flanco isquierdo	656109
19	Presa atlas 70/95mmq Prise atlas 70/95mmq Atlas socket 70/95mmq Atlas steckdose 70/95mmq Enchufe atlas 70/95mmq	712037
20	Kit manopola nera Kit poignee noir Black knob kit Schwarze griff kit Kit manija negra	980772
21	Kit scheda filtro ingresso Kit platine filtre input Input filter card kit Input filterkarte kit Kit tarjeta filtro input	980947
22	Kit 10 diodi Kit 10 diodes Kit 10 diodes Kit 10 dioden Kit 10 diodos	981005
23	Kit ass. Pannello + scheda Kit panneau + fiche Panel + card kit Tafel + karte kit Panel + tarjeta kit	981410
24	Kit scheda interfaccia mig Kit platine interface mig Interface card kit mig Schnittstelle karte kit mig Kit tarjeta interface mig	981412
25	Kit scheda primario Kit fiche primaire Primary pcb kit Primaertrafokarte kit Kit tarjeta primario	981413
26	Kit trasformatore potenza Kit transformateur puissance Power transformer kit Leistungstransformatorkit Kit transformador de potencia	981415
27	Kit scheda secondario Kit fiche secondaire Secondary pcb kit Sekundaertrafokarte kit Kit tarjeta secundario	981417
28	Kit scheda induttanza Kit fiche inductance Inductance card kit Drosselskarte kit Kit tarjeta induccion	981418
29	Kit pressacavo + ghiera Kit presse cable + embout Kit cable bushing + ring nut Kit kabelhalter + nutmutter Kit prensa cable + virola	990046

Schema elettrico, Schéma électrique, Diagram, Schaltplan, Esquema de conexiones.

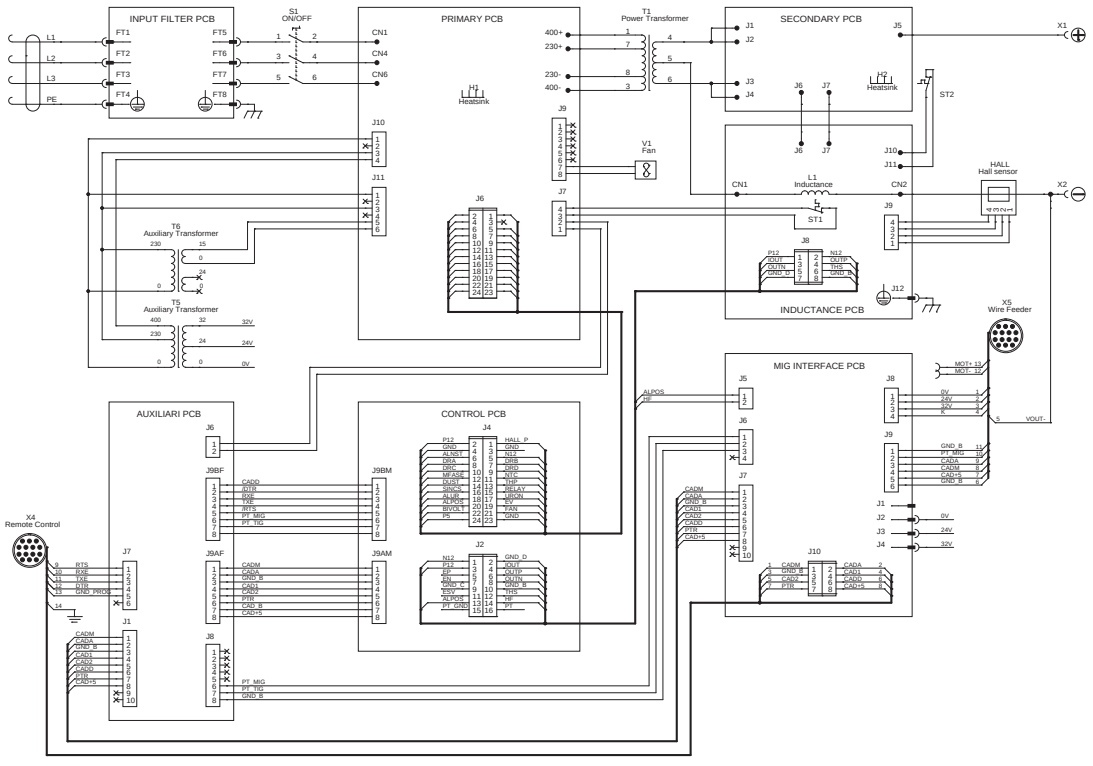

ELENCO PEZZI DI RICAMBIO
LISTE PIECES DETACHEES
SPARE PARTS LIST
ERSATZTEILLISTE
PIEZAS DE REPUESTO

MOTOINVERTER 204 CE (Honda)

Esploso macchina, Dessin appareil, Machine drawing, Explosions Zeichnung des Geräts, Diseño seccionado maquina.

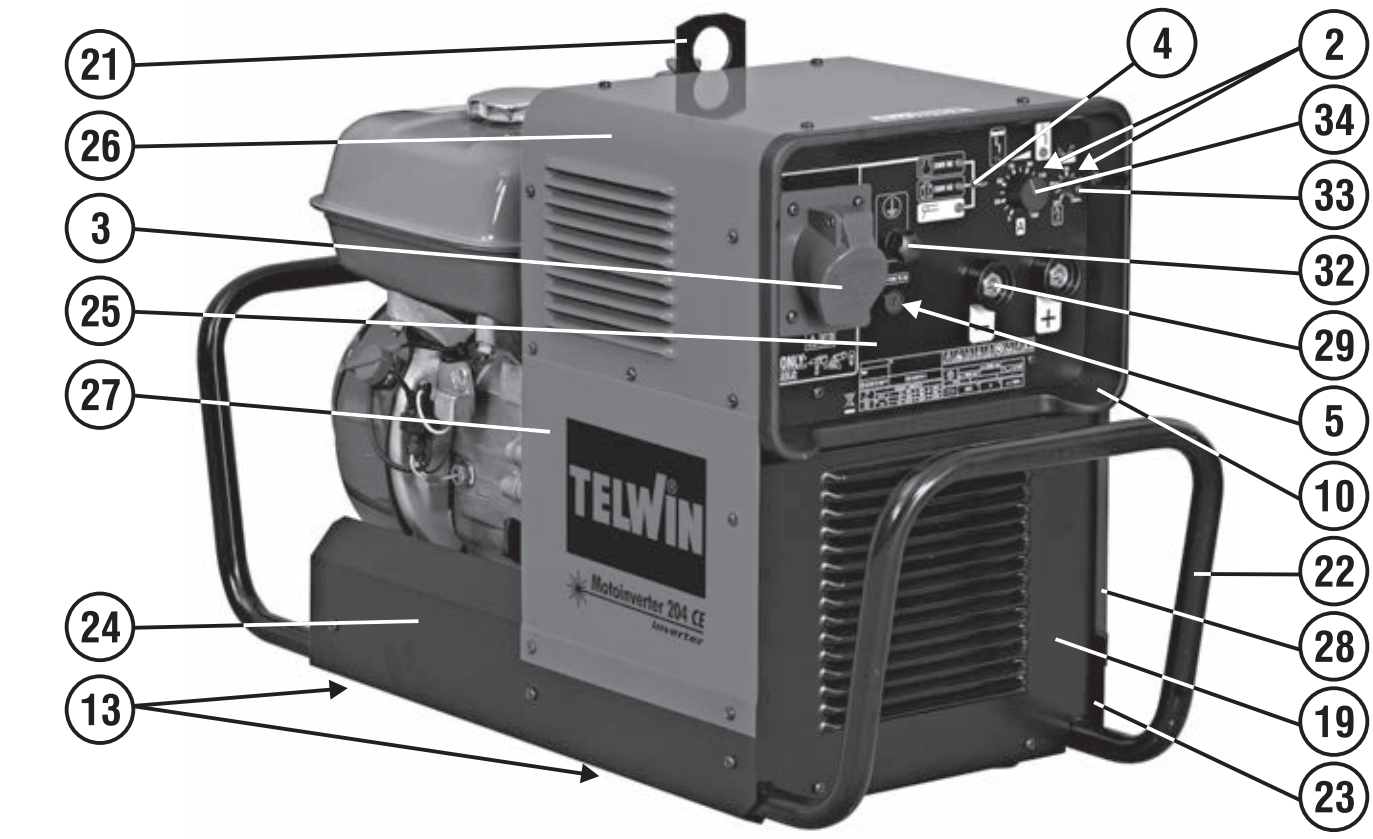

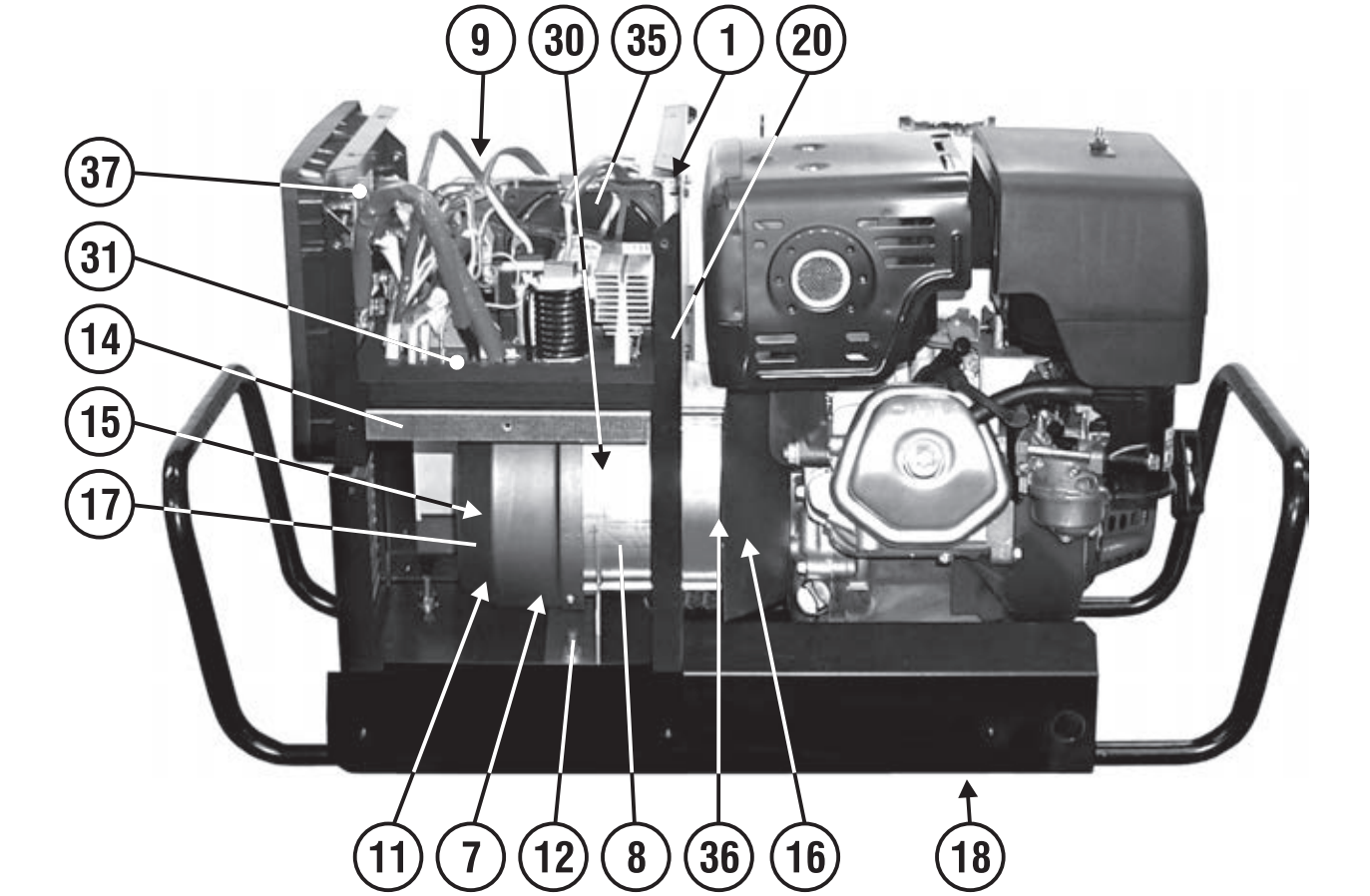

REF.	ELENCO PEZZI DI RICAMBIO PIECES DETACHEES SPARE PARTS LIST ERSATZTEILLISTE PIEZAS DE REPUESTO	CODICE CODE KODE
1	Raddrizzatore Redresseur Rectifier Gleichrichter Rectificador	116369
2	Potenziometro Potentiometre Potentiometer Potentiometer Potenciometro	116865
3	Presa Prise Socket Steckdose Enchufe	121220
4	Deviatore Gareur Switch Schalter Interruptor	121268
5	Fusibile Fusible Fuse Sicherung Fusible	122410
7	Tirante filettato Tirant filetee Threaded tie rod Anzustange Tirante filetado	242128
8	Assieme statore Set stator Stator set Stator set Set stator	314176
9	Kit assieme scheda primario Kit fiche primaire Primary pcb kit Primaertrafokarte kit Kit tarjeta primario	980129
10	Cornice Cadre Frame Rahmen Marco	322666
11	Ventola Helice Fan blade Fluegelrad Aventador	322722
12	Antivibrante Antivibration Vibration damper Schwingungsdampfer Antivibrador	322723
13	Antivibrante Antivibration Vibration damper Schwingungsdampfer Antivibrador	322724
14	Diaframma Diaphragme Diaphragm Diaphragma Diafragma	483661
15	Scudo alternatore Couverture de generateur Generator cover Generator-abdeckung Cubierta del generador	522042
16	Flangia Flange Bride Flansch Brida	522045
17	Copriventola Couverture de ventilateur Fan cover Ventilator-abdeckung Cubierta del ventilador	645142
18	Fondo Chassis Bottom Bodenteil Fondo	645223
19	Frontale Partie frontal Front panel Geraetefront Frontal	645224
20	Retro Partie arriere Back panel Rueckseite Trasera	645359
21	Golfaro Crochet Hook Haken Gancho	645226
22	Manico Poignee Handle Handgriff Manija	645227
23	Fianco sinistro Partie laterale gauche Left side Linke seite Flanco izquierdo	645228
24	Fianco destro Partie lateral droite Right side panel Rechte seite Flanco derecho	645229
25	Cruscotto Tableau Dashboard Schaltbrett Cuadro	649906
26	Mantello Capot Cover Deckel Panel de cobertura	651092
27	Fianco superiore destro Partie lateral superieur droite Right upper side panel Recht oben seitenblech Flanco superior derecho	655932
28	Fianco superiore sinistro Partie lateral superieur gauche Left upper side panel Links oben seitenblech Flanco superior izquierdo	655933
29	Presa atlas 25mmq Prise atlas 25mmq Socket atlas 25mmq Steckdose atlas 25mmq Enchufe atlas 25mmq	712035
30	Kit rotore completo Kit rotor complete Complete rotor kit Komplett rotor kit Kit rotore completo	980128
31	Kit assieme scheda secondario Kit fiche secondaire Secundary pcb kit Sekundärtrafokarte kit Kit tarjeta secundario	980130
32	Kit morsetto di carica nero Kit borne de charge noire Kit black charging clamp Kit schwarze ladungsklemme Kit borne de carga negro	990073
33	Manopola Poignee Knob Griff Manija	121395
34	Manopola Poignee Knob Griff Manija	121424
35	Kit ventilatore Ventilateur kit Fan kit Ventilator kit Kit aventador	990976
36	Schermo Blindage Shield Schild Proteccion	645244
37	Kit scheda controllo Kit fiche de controle Control pcb kit Kontrollekarte kit Kit tarjeta de controlo	980690

Schema elettrico, Schéma électrique, Diagram, Schaltplan, Esquema de conexiones.

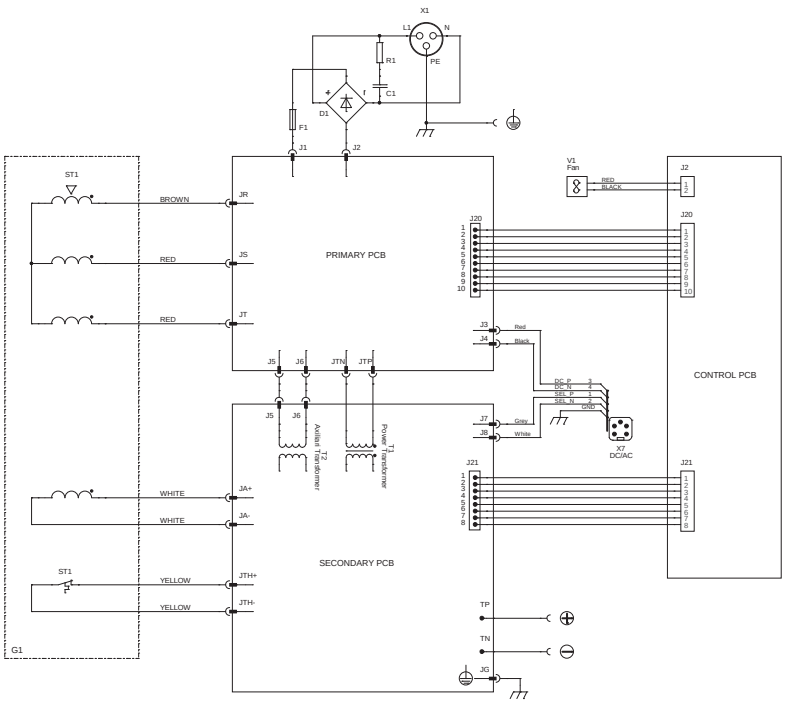

ELENCO PEZZI DI RICAMBIO
LISTE PIECES DETACHEES
SPARE PARTS LIST
ERSATZTEILLISTE
PIEZAS DE REPUESTO

NORDIKA 1800

Esploso macchina, Dessin appareil, Machine drawing, Explosions Zeichnung des Geräts, Diseño seccionado maquina.



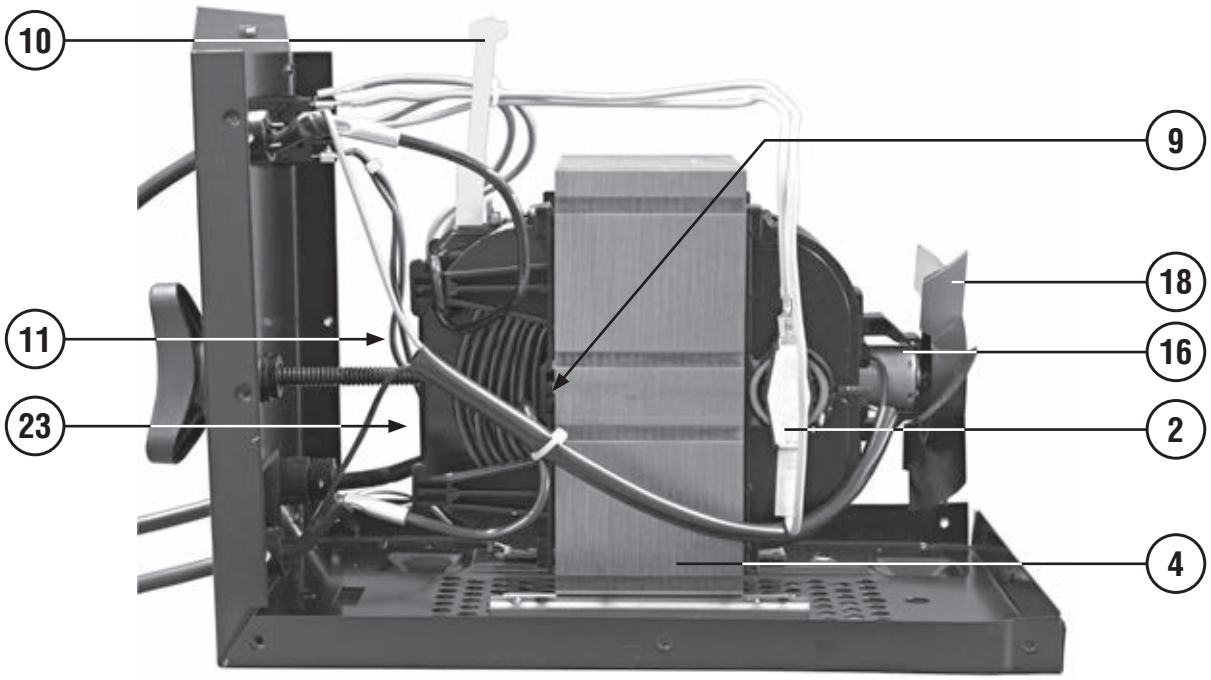

REF.	ELENCO PEZZI DI RICAMBIO PIECES DETACHEES SPARE PARTS LIST ERSATZTEILLISTE PIEZAS DE REPUESTO	CODICE CODE KODE
1	Interruttore Interrupteur Switch Schalter Interruptor	122752
2	Termostato Thermostat Thermostat Thermostat Termostato	121715
3	Cavo alim. 3g1.5 2m spina schuko Cable alim. 3g1.5 2m fiche schuko Mains cable 3g1.5 2m schuko plug Netzkabel 3g1.5 2m schuko stecker Cable alim. 3g1.5 2m espina schuko	132310
4	Trasformatore Transformateur Transformer Transformator Transformador	169513
5	Maniglia Poignee Handle Handgriff Manija	322676
6	Volantino Volant Handwheel Handrad Volant	313015
7	Pressacavo Presse cable Cable bushing Kabelhalter Prensa cable	322112
8	Targhetta trasparente Plaque pour reglage Plate for regulation Durchsichtiges schild Tarjeta transparente	322076
9	Molla Ressort Spring Feder Muelle	452092
10	Bandierina indice Index de reglage Regulation indicator Regelungsfahne Banderilla de regulacion	322445
11	Kit shunt Kit shunt Shunt kit Shunt kit Kit shunt	990418
13	Retro Partie arriere Back panel Rueckseite Trasera	644835

REF.	ELENCO PEZZI DI RICAMBIO PIECES DETACHEES SPARE PARTS LIST ERSATZTEILLISTE PIEZAS DE REPUESTO	CODICE CODE KODE
14	Frontale Partie frontal Front panel Geraetefront Frontal	642333
15	Kit mantello Kit capot Cover kit Deckelkit Kit panel de cobertura	981463
16	Motore Moteur Motor Motor Motor	152250
17	Dallas 300 pinza portaelettrodi 300a Dallas 300 pince porte-electrodes 300a Dallas 300 electrode holder 300a Dallas 300 elektrodenhalter 300a Dallas 300 pinza portaelectrodos 300a	712260
18	Ventola Helice Fan blade Fluegelrad Aventador	322533
19	Tappo per maniglia Bouchon pour poignee Cap for handle Stopfen fuer handgriff Tapon para manija	322681
20	Cavo 16 mmq 1,8 m Cable 16 mmq 1,8 m Cable 16 mmq 1,8 m Kabel 16 mmq 1,8 m Cable 16 mmq 1,8 m	124502
22	Colorado 150b pinza di massa 150a Colorado 150b pince de masse 150a Colorado 150b work clamp 150a Colorado 150b masseklemme 150a Colorado 150b pinza de masa 150a	712001
23	Giogo Traverse Joke Joch Juego	422502

REF.	ELENCO PEZZI DI RICAMBIO PIECES DETACHEES SPARE PARTS LIST ERSATZTEILLISTE PIEZAS DE REPUESTO	CODICE CODE KODE

Schema elettrico, Schéma électrique, Diagram, Schaltplan, Esquema de conexiones.

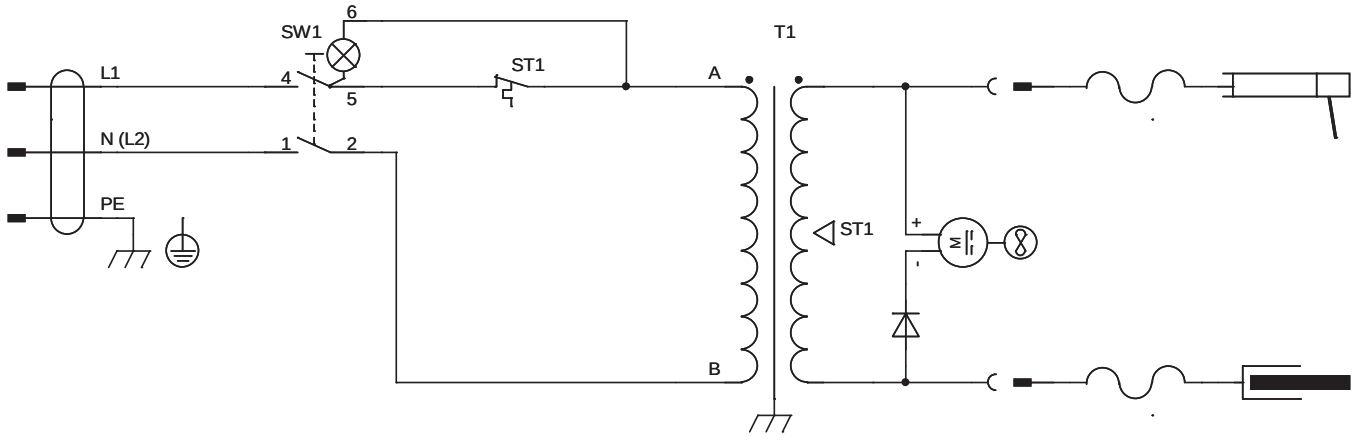

ELENCO PEZZI DI RICAMBIO
LISTE PIECES DETACHEES
SPARE PARTS LIST
ERSATZTEILLISTE
PIEZAS DE REPUESTO

NORDICA 4.181 TURBO

Esploso macchina, Dessin appareil, Machine drawing, Explosions Zeichnung des Geräts, Diseño seccionado maquina.



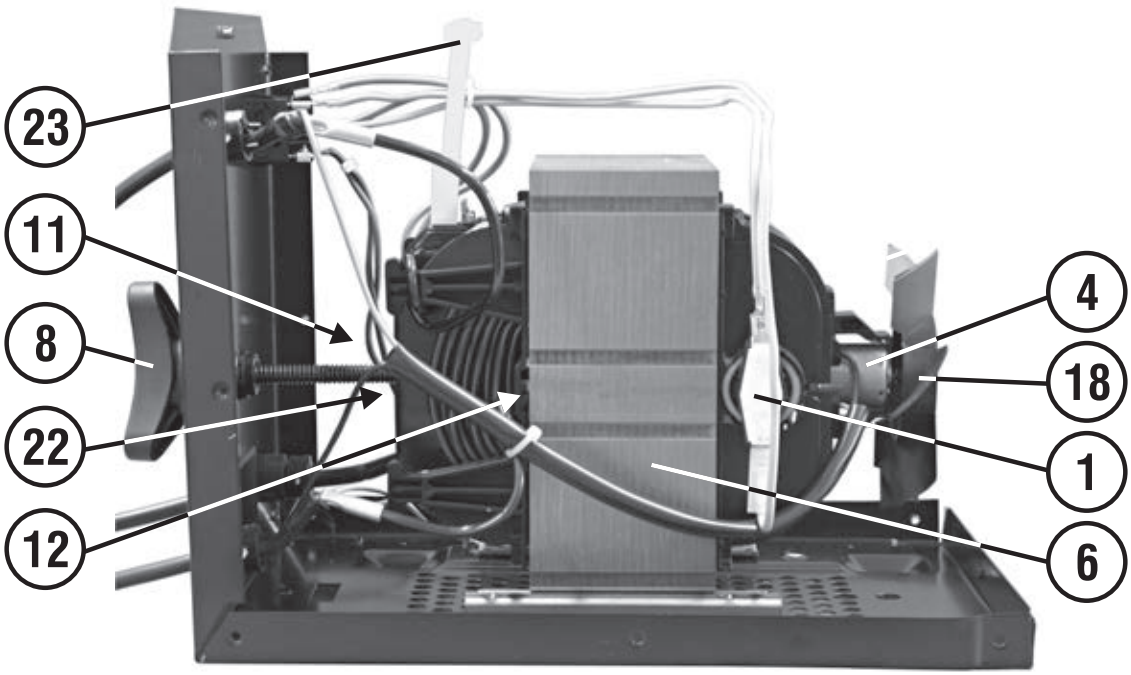

REF.	ELENCO PEZZI DI RICAMBIO PIECES DETACHEES SPARE PARTS LIST ERSATZTEILLISTE PIEZAS DE REPUESTO	CODICE CODE KODE
1	Termostato Thermostat Thermostat Thermostat Termostato	121715
2	Interruttore Interrupteur Switch Schalter Interruptor	122752
3	Cavo 16 mmq 1,8 m Cable 16 mmq 1,8 m Cable 16 mmq 1,8 m Kabel 16 mmq 1,8 m Cable 16 mmq 1,8 m	124502
4	Motore Moteur Motor Motor Motor	152250
5	Cavo alim. 3g1.5 2m spina schuko Cable alim. 3g1.5 2m fiche schuko Mains cable 3g1.5 2m schuko plug Netzkabel 3g1.5 2m schuko stecker Cable alim. 3g1.5 2m espina schuko	132310
6	Trasformatore Transformateur Transformer Transformator Transformador	169517
7	Tappo per maniglia Bouchon pour poignee Cap for handle Stopfen fuer handgriff Tapon para manija	322681
8	Volantino Volant Handwheel Handrad Volant	313016
9	Targhetta trasparente Plaque transparente Transparent plate Durchsichtiges schild Tarjeta transparente	322063
10	Pressacavo Presse cable Cable bushing Kabelhalter Prensa cable	322112
11	Giogo Traverse Joke Joch Juego	422502
12	Molla Ressort Spring Feder Muelle	452092

REF.	ELENCO PEZZI DI RICAMBIO PIECES DETACHEES SPARE PARTS LIST ERSATZTEILLISTE PIEZAS DE REPUESTO	CODICE CODE KODE
14	Retro Partie arriere Back panel Rueckseite Trasera	644136
15	Frontale Partie frontal Front panel Geraetefront Frontal	642337
16	Kit mantello Kit capot Cover kit Deckelkit Kit panel de cobertura	981465
17	Colorado 150b pinza di massa 150a Colorado 150b pince de masse 150a Colorado 150b work clamp 150a Colorado 150b masseklemme 150a Colorado 150b pinza de masa 150a	712001
18	Ventola Helice Fan blade Fluegelrad Aventador	322533
19	Dallas 300 pinza portaelettrodi 300a Dallas 300 pince porte-electrodes 300a Dallas 300 electrode holder 300a Dallas 300 elektrodenhalter 300a Dallas 300 pinza portaelectrodos 300a	712260
20	Maniglia Poignee Handle Handgriff Manija	322676
22	Kit shunt Kit shunt Shunt kit Shunt kit Kit shunt	990416
23	Bandierina indice Index de reglage Regulation indicator Regelungsfahne Banderilla de regulacion	322488

REF.	ELENCO PEZZI DI RICAMBIO PIECES DETACHEES SPARE PARTS LIST ERSATZTEILLISTE PIEZAS DE REPUESTO	CODICE CODE KODE

Schema elettrico, Schéma électrique, Diagram, Schaltplan, Esquema de conexiones.

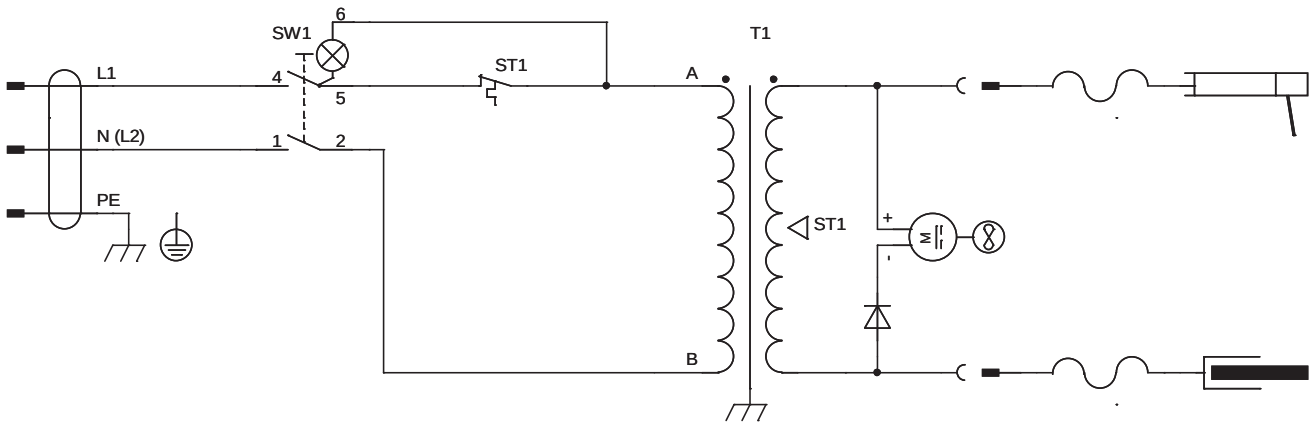

ELENCO PEZZI DI RICAMBIO
LISTE PIECES DETACHEES
SPARE PARTS LIST
ERSATZTEILLISTE
PIEZAS DE REPUESTO

NORDIKA 3200

Esploso macchina, Dessin appareil, Machine drawing, Explosions Zeichnung des Geräts, Diseño seccionado maquina.

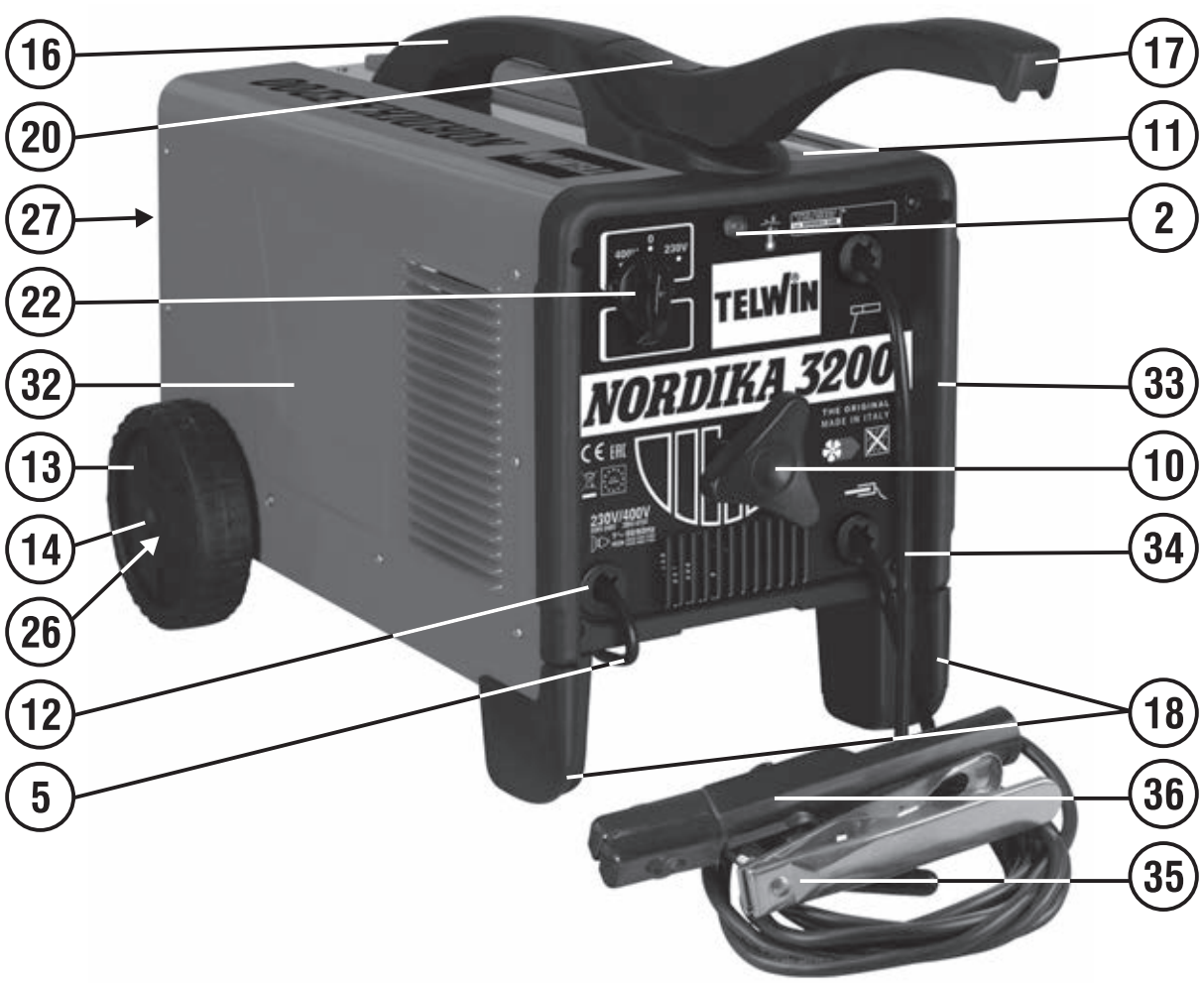

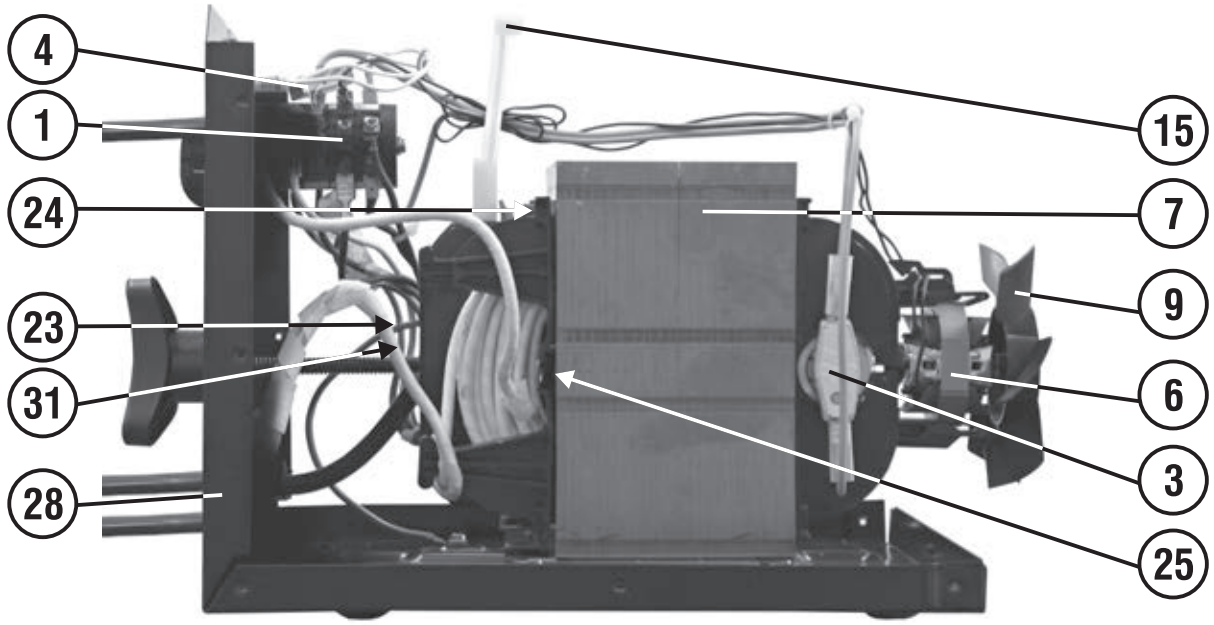

REF.	ELENCO PEZZI DI RICAMBIO PIECES DETACHEES SPARE PARTS LIST ERSATZTEILLISTE PIEZAS DE REPUESTO	CODICE CODE KODE
1	Commutatore Commutateur Switch Schalter Conmutador	121508
2	Lampada Temoin lumineux Pilot lamp Kontrollampe Piloto	122654
3	Termostato Thermostat Thermostat Thermostat Termostato	121720
4	Ass.Resistenza-condensatore Condensateur et resistance Capacitor-resistance Kondensator-widerstand Condensador-resistencia	123362
5	Cavo alim. 3g2.5 2 M Cable alim. 3g2.5 2 M Mains cable 3g2.5 2 M Netzkabel 3g2.5 2 M Cable alim. 3g2.5 2 M	132267
6	Motore ventilatore Moteur ventilateur Fan motor Ventilatormotor Motor ventilacion	152080
7	Trasformatore Transformateur Transformer Transformator Transformador	169525
9	Ventola Helice Fan blade Flügelrad Aventador	312025
10	Volantino Volant Handwheel Handrad Volante	313017
11	Targhetta trasparente Plaque transparente Transparent plate Durchsichtiges schild Tarjeta transparente	322063
12	Pressacavo Presse cable Cable bushing Kabelhalter Prensa cable	322112
13	Ruota Roue Wheel Rad Rueda	322193

REF.	ELENCO PEZZI DI RICAMBIO PIECES DETACHEES SPARE PARTS LIST ERSATZTEILLISTE PIEZAS DE REPUESTO	CODICE CODE KODE
14	Tappo blocca ruota Bouchon ferme roue Wheel locking ring Radsperrestopfen Tapon de bloqueo rueda	322223
15	Bandierina indice Index de reglage Regulation indicator Regelungsfahne Banderilla de regulacion	322488
16	Maniglia Poignee Handle Handgriff Manija	322677
17	Manico Poignee Handle Handgriff Manija	322678
18	Kit piedini Kit embouts Feet kit Fuss kit Kit pies	322750
19	Tappo per maniglia Bouchon pour poignee Cap for handle Stopfen fuer handgriff Tapon para manija	322681
20	Tappo per manico Bouchon pour poignee Handle cap Handgriff stopfen Tapon para manija	322682
22	Assieme manopola per commutatore Set poigne pour commutateur Switch knob set Umschaltergriff set Set manjia para conmutador	323101
23	Giogo Traverse Joke Joch Juego	422502
24	Molla antivibrazione Ressort anti-vibration Antivibration spring Schwingungsdaempferfeder Muelle antivibracion	452085
25	Molla Ressort Spring Feder Muelle	452092
26	Asse per ruote Axe roues Wheels axle Radachse Eje ruedas	482783

REF.	ELENCO PEZZI DI RICAMBIO PIECES DETACHEES SPARE PARTS LIST ERSATZTEILLISTE PIEZAS DE REPUESTO	CODICE CODE KODE
27	Kit retro Kit partie arriere Back panel kit Rueckseite kit Kit trasera	980276
28	Frontale Partie frontal Front panel Geraetefront Frontal	642358
31	Kit shunt Kit shunt Shunt kit Shunt kit Kit shunt	990417
32	Kit mantello Kit capot Cover kit Deckelkit Kit panel de cobertura	981485
33	Cornice Cadre Frame Rahmen Marco	322675
34	Cavo 16 mmq 1,8 m Cable 16 mmq 1,8 m Cable 16 mmq 1,8 m Kabel 16 mmq 1,8 m Cable 16 mmq 1,8 m	124502
35	Toledo 250 pinza di massa 250a Toledo 250 pince de masse 250a Toledo 250 work clamp 250a Toledo 250 masseklemme 250a Toledo 250 pinza de masa 250a	712030
36	Dallas 300 pinza portaelettrodi 300a Dallas 300 pince porte-electrodes 300a Dallas 300 electrode holder 300a Dallas 300 elektrodenhalter 300a Dallas 300 pinza portaelectrodos 300a	712260

Schema elettrico, Schéma électrique, Diagram, Schaltplan, Esquema de conexiones.

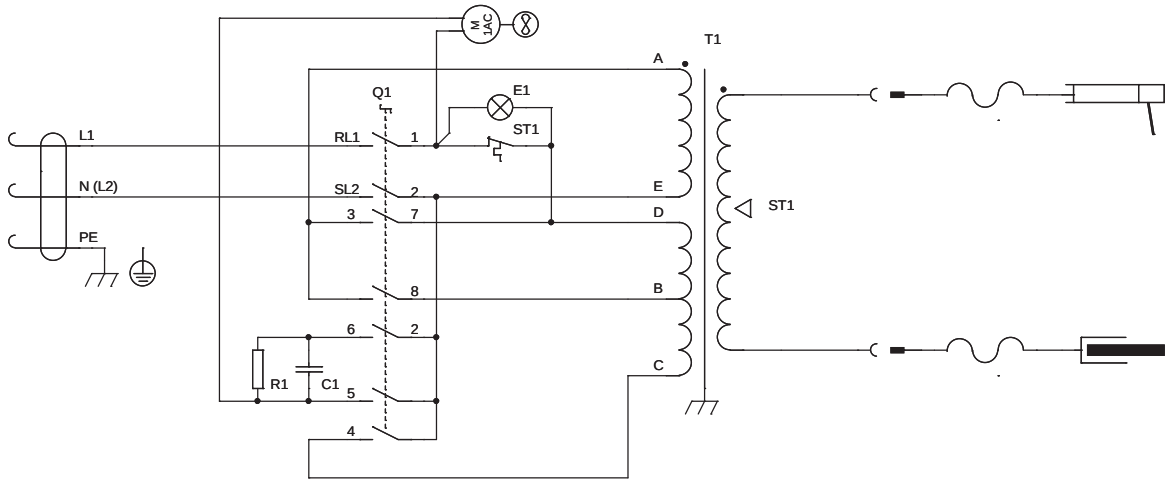

Q1	RL1	SL2	4	5	6	7	8
230V	X	X	X	X		X	
0							
400V	X	X			X		X
	1		2			3	

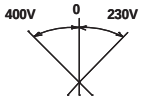

ELENCO PEZZI DI RICAMBIO
LISTE PIECES DETACHEES
SPARE PARTS LIST
ERSATZTEILLISTE
PIEZAS DE REPUESTO

NORDIKA 3250

Esploso macchina, Dessin appareil, Machine drawing, Explosions Zeichnung des Geräts, Diseño seccionado maquina.

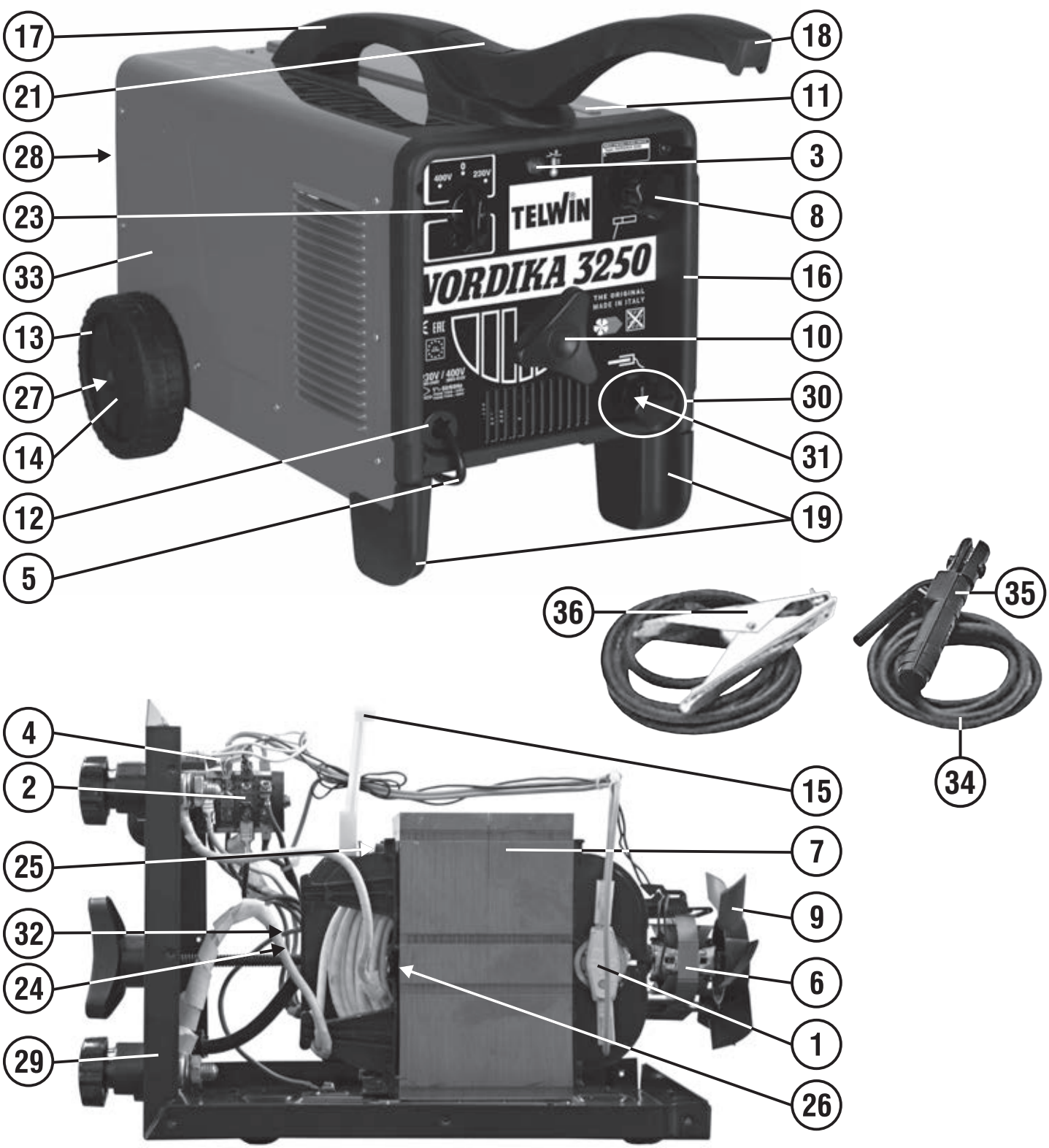

REF.	ELENCO PEZZI DI RICAMBIO PIECES DETACHEES SPARE PARTS LIST ERSATZTEILLISTE PIEZAS DE REPUESTO	CODICE CODE KODE
1	Termostato Thermostat Thermostat Thermostat Termostato	121721
2	Commutatore Commutateur Switch Schalter Conmutador	121508
3	Lampada Temoin lumineux Pilot lamp Kontrollampe Piloto	122654
4	Ass.Resistenza-condensatore Condensateur et resistance Capacitor-resistance Kondensator-widerstand Condensador-resistencia	123362
5	Cavo alim. 3g2.5 2 M Cable alim. 3g2.5 2 M Mains cable 3g2.5 2 M Netzkabel 3g2.5 2 M Cable alim. 3g2.5 2 M	132267
6	Motore ventilatore Moteur ventilateur Fan motor Ventilatormotor Motor ventilacion	152080
7	Trasformatore Transformateur Transformer Transformator Transformador	169797
8	Volantino per morsetto Volant pour borne Knob for clamp Handrad fuer klemme Volante por borne	312024
9	Ventola Helice Fan blade Flügelrad Aventador	312025
10	Volantino Volant Handwheel Handrad Volante	313017
11	Targhetta trasparente Plaque transparente Transparent plate Durchsichtiges schild Tarjeta transparente	322063
12	Pressacavo Presse cable Cable bushing Kabelhalter Prensa cable	322112
13	Ruota Roue Wheel Rad Rueda	322193
14	Tappo blocca ruota Bouchon ferme roue Wheel locking ring Radsperrestopfen Tapon de bloqueo rueda	322223
15	Bandierina indice Index de reglage Regulation indicator Regelungsfahne Banderilla de regulacion	322488
16	Cornice Cadre Frame Rahmen Marco	322675
17	Maniglia Poignee Handle Handgriff Manija	322677
18	Manico Poignee Handle Handgriff Manija	322678
19	Kit piedini Kit embouts Feet kit Fuss kit Kit pies	322750
20	Tappo per maniglia Bouchon pour poignee Cap for handle Stopfen fuer handgriff Tapon para manija	322681
21	Tappo per manico Bouchon pour poignee Handle cap Handgriff stopfen Tapon para manija	322682
23	Assieme manopola per commutatore Set poigne pour commutateur Switch knob set Umschaltergriff set Set manjia para conmutador	323101
24	Giogo Traverse Joke Joch Juego	422502
25	Molla antivibrazione Ressort anti-vibration Antivibration spring Schwingungsdaempferfeder Muelle antivibracion	452085
26	Molla Ressort Spring Feder Muelle	452092
27	Asse per ruote Axe roues Wheels axle Radachse Eje ruedas	482783
28	Kit retro Kit partie arriere Back panel kit Rueckseite kit Kit trasera	980276
29	Frontale Partie frontal Front panel Geraetefront Frontal	642369
30	Kit morsetto completo d.33mm Kit borne complete d.33mm Complete terminal kit d.33mm Komplet kabelklemme kit d.33mm Kit borne completo d.33mm	990162
31	Kit coppia rondelle isolanti Kit rondelles isolantes Insulating washers kit Isolierscheibekit Kit arandelas asladoras	990163
32	Kit shunt Kit shunt Shunt kit Shunt kit Kit shunt	990417
33	Kit mantello Kit capot Cover kit Deckel kit Kit panel de cobertura	981342
34	Cavo 25 mmq 1.8m Cable 25 mmq 1.8m Cable 25 mmq 1.8m Kabel 25 mmq 1.8m Cable 25 mmq 1.8m	124590
35	Dallas 300 pinza portaelettrodi 300a Dallas 300 pince porte-electrodes 300a Dallas 300 electrode holder 300a Dallas 300 elektrodenhalter 300a Dallas 300 pinza portaelectrodos 300a	712260
36	Toledo 250 pinza di massa 250a Toledo 250 pince de masse 250a Toledo 250 work clamp 250a Toledo 250 masseklemme 250a Toledo 250 pinza de masa 250a	712030

Schema elettrico, Schéma électrique, Diagram, Schaltplan, Esquema de conexiones.

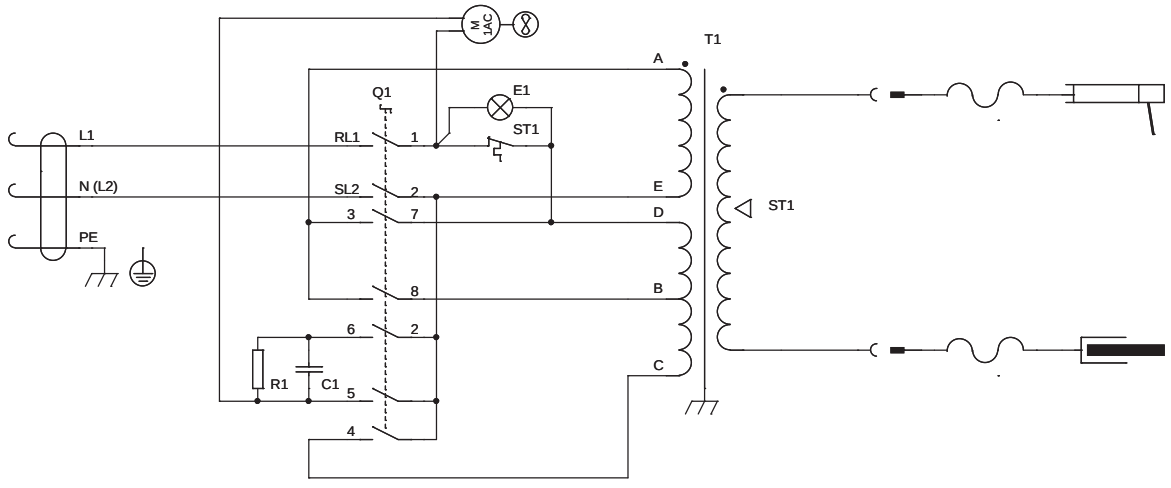

Q1	RL1	SL2	4	5	6	7	8
230V	X	X	X	X		X	
0							
400V	X	X			X		X
	1		2			3	

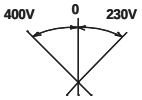

ELENCO PEZZI DI RICAMBIO
LISTE PIECES DETACHEES
SPARE PARTS LIST
ERSATZTEILLISTE
PIEZAS DE REPUESTO

NORDICA 4.280 TURBO

TELWIN®

Esploso macchina, Dessin appareil, Machine drawing, Explosions Zeichnung des Geräts, Diseño seccionado maquina.

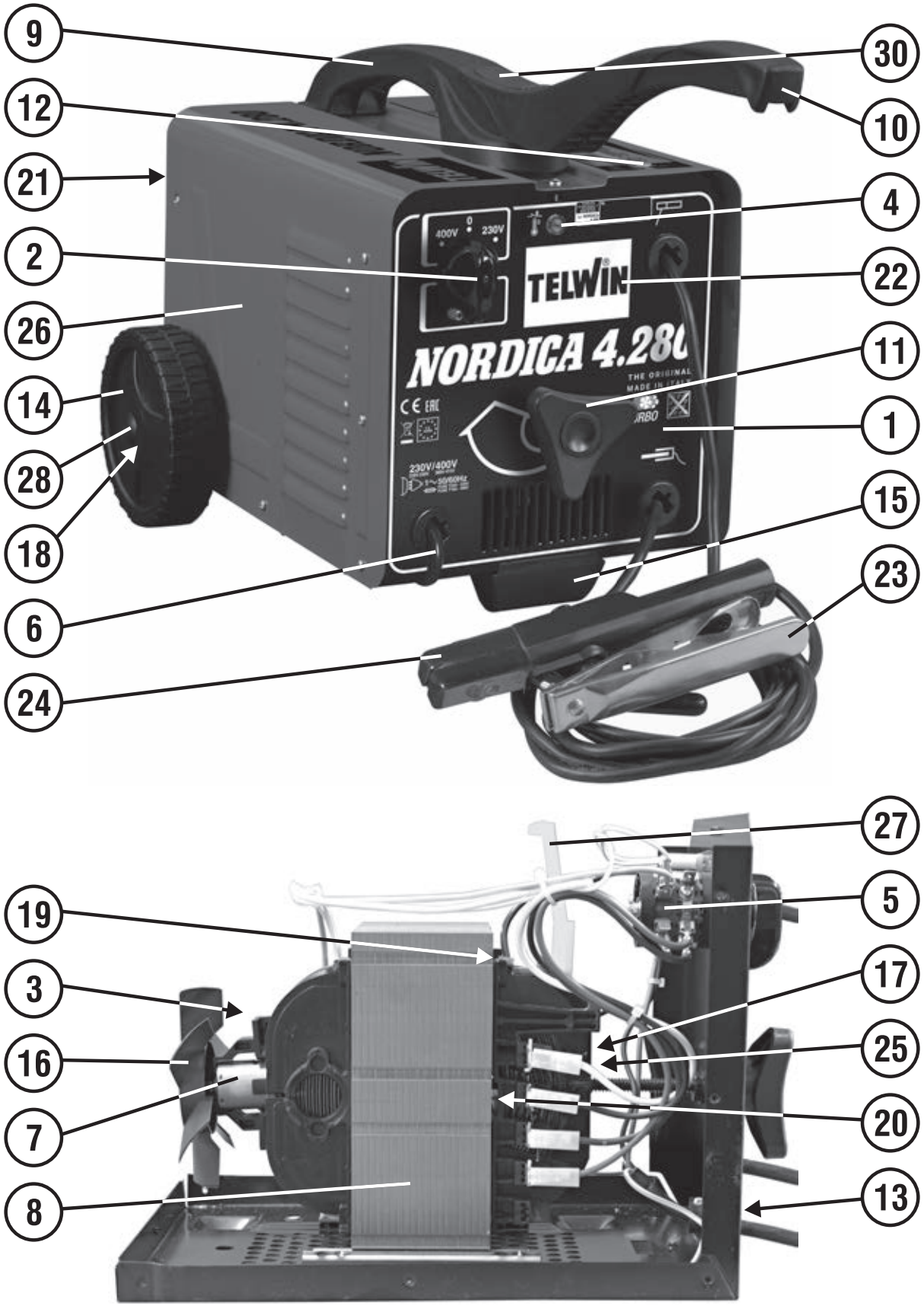

REF.	ELENCO PEZZI DI RICAMBIO PIECES DETACHEES SPARE PARTS LIST ERSATZTEILLISTE PIEZAS DE REPUESTO	CODICE CODE KODE
1	Cavo 16 mmq 1,8 m Cable 16 mmq 1,8 m Cable 16 mmq 1,8 m Kabel 16 mmq 1,8 m Cable 16 mmq 1,8 m	124502
2	Assieme manopola per commutatore Set poigne pour commutateur Switch knob set Umschaltergriff set Set manjia para conmutador	323101
3	Termostato Thermostat Thermostat Thermostat Termostato	121720
4	Lampada Temoin lumineux Pilot lamp Kontrollampe Piloto	122654
5	Commutatore Commutateur Switch Schalter Conmutador	121509
6	Cavo alim. 3g2.5 2 M Cable alim. 3g2.5 2 M Mains cable 3g2.5 2 M Netzkabel 3g2.5 2 M Cable alim. 3g2.5 2 M	132267
7	Motore Moteur Motor Motor Motor	152250
8	Trasformatore Transformateur Transformer Transformator Transformador	169527
9	Maniglia Poignee Handle Handgriff Manija	322676
10	Manico Poignee Handle Handgriff Manija	322678
11	Volantino Volant Handwheel Handrad Volante	313017
12	Targhetta trasparente Plaque transparente Transparent plate Durchsichtiges schild Tarjeta transparente	322063

REF.	ELENCO PEZZI DI RICAMBIO PIECES DETACHEES SPARE PARTS LIST ERSATZTEILLISTE PIEZAS DE REPUESTO	CODICE CODE KODE
13	Pressacavo Presse cable Cable bushing Kabelhalter Prensa cable	322112
14	Ruota Roue Wheel Rad Rueda	322193
15	Piedino Embout Foot Fuss Pie	322679
16	Ventola Helice Fan blade Fluegelrad Aventador	322533
17	Giogo Traverse Joke Joch Juego	422502
18	Asse per ruote Axe roues Wheels axle Radachse Eje ruedas	482783
19	Molla antivibrazione Ressort anti-vibration Antivibration spring Schwingungsdaempferfeder Muelle antivibracion	452085
20	Molla Ressort Spring Feder Muelle	452092
21	Retro Partie arriere Back panel Rueckseite Trasera	644836
22	Frontale Partie frontal Front panel Geraetefront Frontal	649519
23	Toledo 250 pinza di massa 250a Toledo 250 pince de masse 250a Toledo 250 work clamp 250a Toledo 250 masseklemme 250a Toledo 250 pinza de masa 250a	712030
24	Dallas 300 pinza portaelettrodi 300a Dallas 300 pince porte-electrodes 300a Dallas 300 electrode holder 300a Dallas 300 elektrodenhalter 300a Dallas 300 pinza portaelectrodos 300a	712260

REF.	ELENCO PEZZI DI RICAMBIO PIECES DETACHEES SPARE PARTS LIST ERSATZTEILLISTE PIEZAS DE REPUESTO	CODICE CODE KODE
25	Kit shunt Kit shunt Shunt kit Shunt kit Kit shunt	990417
26	Kit mantello Kit capot Cover kit Deckel kit Kit panel de cobertura	990831
27	Bandierina indice Index de reglage Regulation indicator Regelungsfahne Banderilla de regulacion	322488
28	Tappo blocca ruota Bouchon ferme roue Wheel locking ring Radsperrestopfen Tapon de bloqueo rueda	322223
29	Tappo per maniglia Bouchon pour poignee Cap for handle Stopfen fuer handgriff Tapon para manija	322681
30	Tappo per manico Bouchon pour poignee Handle cap Handgriff stopfen Tapon para manija	322682

Schema elettrico, Schéma électrique, Diagram, Schaltplan, Esquema de conexiones.

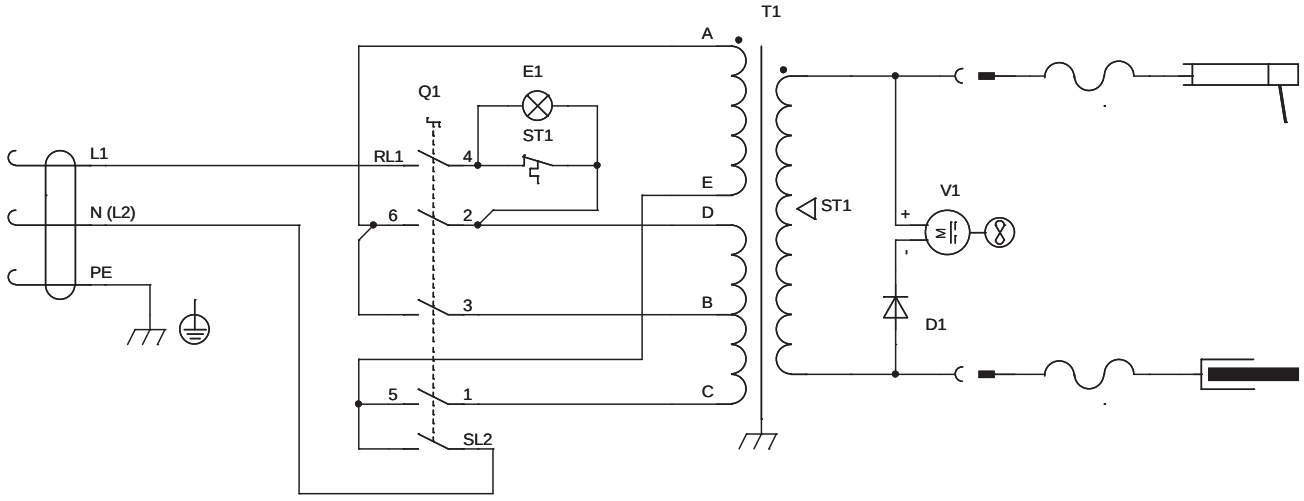

Q1	RL1	SL2	1	2	3
230V	X	X	X	X	
0					
400V	X	X			X
	4		5		6

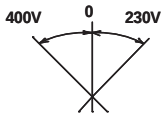

ELENCO PEZZI DI RICAMBIO
LISTE PIECES DETACHEES
SPARE PARTS LIST
ERSATZTEILLISTE
PIEZAS DE REPUESTO

ARTIKA 270

Esploso macchina, Dessin appareil, Machine drawing, Explosions Zeichnung des Geräts, Diseño seccionado maquina.

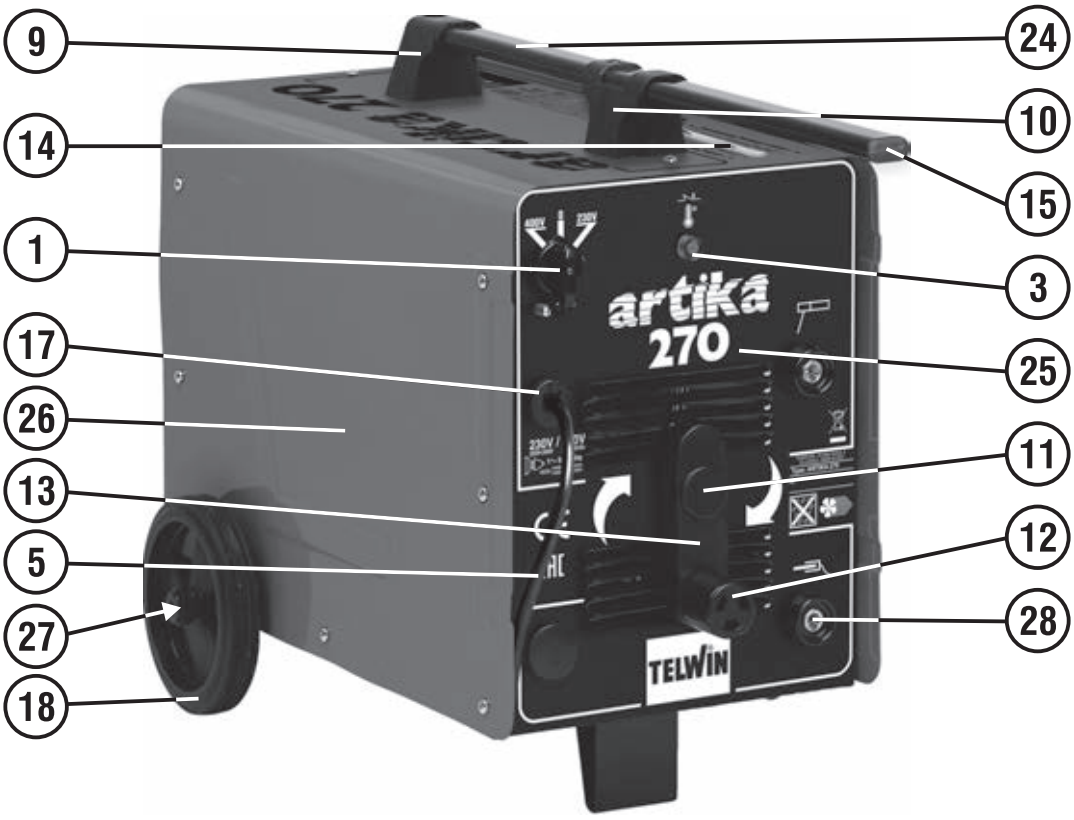

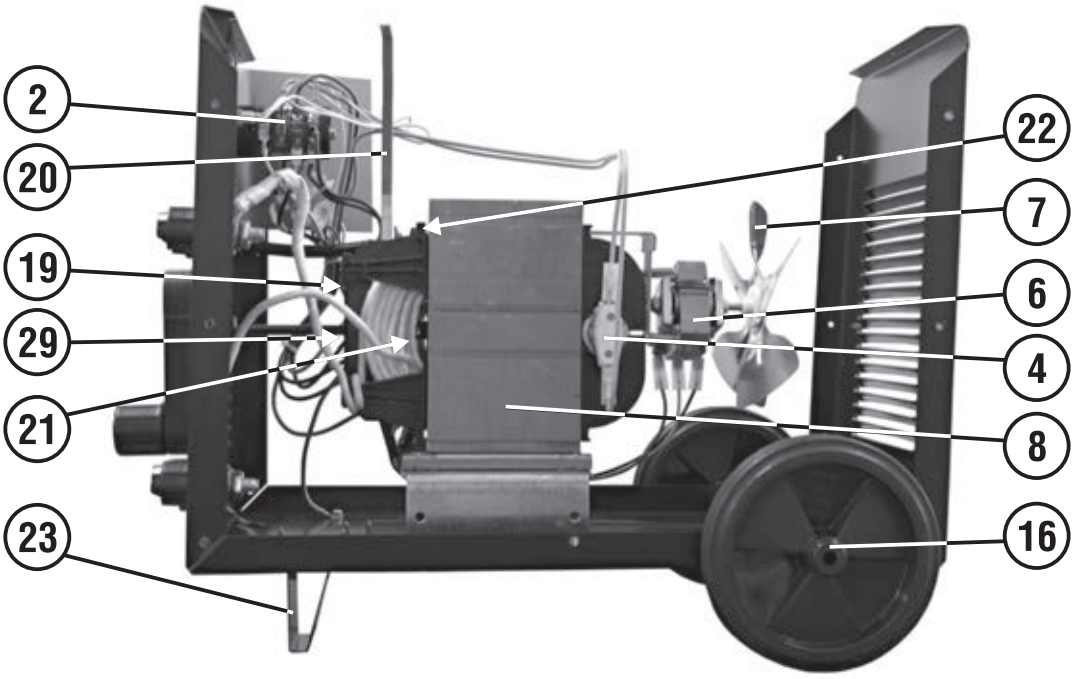

REF.	ELENCO PEZZI DI RICAMBIO PIECES DETACHEES SPARE PARTS LIST ERSATZTEILLISTE PIEZAS DE REPUESTO	CODICE CODE KODE
1	Assieme manopola per commutatore Set poigne pour commutateur Switch knob set Umschaltergriff set Set manjia para conmutador	323101
2	Commutatore Commutateur Switch Schalter Conmutador	121508
3	Lampada gialla Temoin lumineux Signal lamp Kontrolleuchte Piloto	122529
4	Termostato Thermostat Thermostat Thermostat Termostato	121721
5	Cavo alim. 3g2.5 2 M Cable alim. 3g2.5 2 M Mains cable 3g2.5 2 M Netzkabel 3g2.5 2 M Cable alim. 3g2.5 2 M	132267
6	Motore Moteur Motor Motor Motor	152073
7	Ventola Helice Fan blade Fluegelrad Aventador	152054
8	Trasformatore Transformateur Transformer Transformator Transformador	169797
9	Supporto manico posteriore Support poignee posterieur Rear handle support Rueckhandgriffhalter Sosten por manija posteriore	312015
10	Supporto manico anteriore Support poignee anterieur Front handle support Frontalhandgriffhalter Sosten por manija frontal	312016
11	Coperchio staffa Couvercle etrier Braket cover Buegeldeckel Tapadera por estribo	312199
12	Impugnatura per volantino Poignee pour volant Knob for handwheel Griff fuer handrad Empunadura por volantito	312200
13	Vite regolazione Vis de reglage Regulation screw Regelungschraube Tornillo de ajuste	313440
14	Targhetta trasparente Plaque transparente Transparent plate Durchsichtiges schild Tarjeta transparente	322063
15	Tappo Bouchon Cap Stopfen Tapon	322092
16	Tappo blocca ruote Bouchon ferme roue Wheel locking ring Radsperrestopfen Tapon de bloqueo rueda	322102
17	Pressacavo Presse cable Cable bushing Kabelhalter Prensa cable	322112
18	Ruota fissa Roue fixe Fixed wheel Fixes rad Rueda firme	322198
19	Giogo Traverse Joke Joch Juego	422502
20	Bandierina indice Index de reglage Regulation indicator Regelungsfahne Banderilla de regulacion	422512
21	Molla Ressort Spring Feder Muelle	452092
22	Molla antivibrazione Ressort anti-vibration Antivibration spring Schwingungsdaempferfeder Muelle antivibracion	452085
23	Piedino Embout Foot Fuss Pie	644402
24	Manico Poignee Handle Handgriff Manija	644712
25	Frontale Partie frontal Front panel Geraetefront Frontal	642370
26	Kit mantello Kit capot Cover kit Deckelkit Kit panel de cobertura	981343
27	Asse per ruote Axe roues Wheels axle Radachse Eje ruedas	681082
28	Presa atlas 25mmq Prise atlas 25mmq Socket atlas 25mmq Steckdose atlas 25mmq Enchufe atlas 25mmq	712035
29	Kit shunt Kit shunt Shunt kit Shunt kit Kit shunt	990417

Schema elettrico, Schéma électrique, Diagram, Schaltplan, Esquema de conexiones.

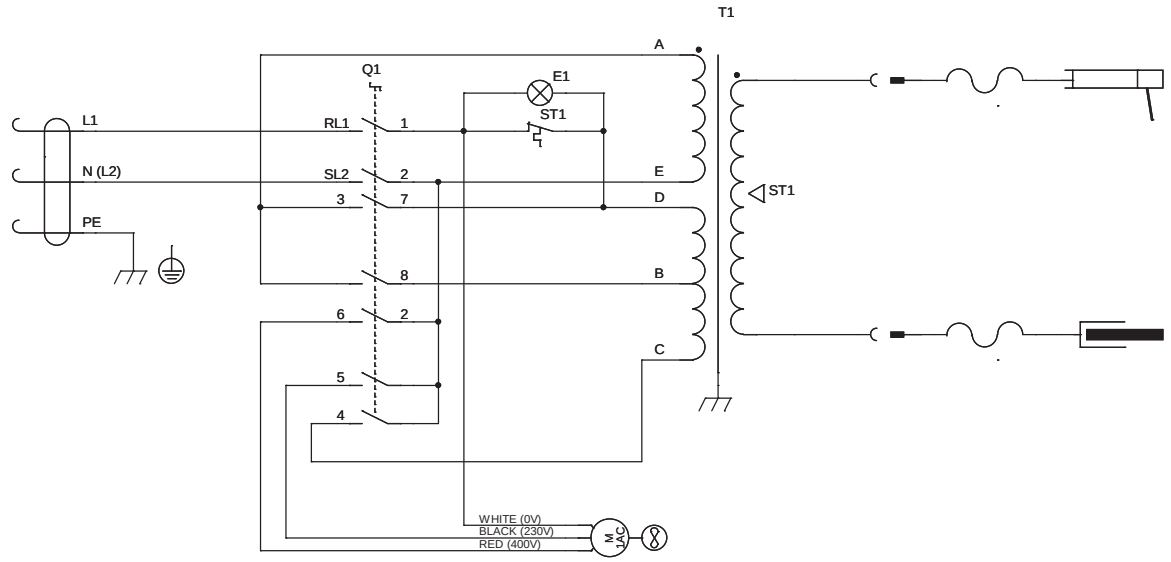

Q1	RL1	SL2	4	5	6	7	8
230V	X	X	X	X		X	
0							
400V	X	X			X		X
	1		2			3	

ELENCO PEZZI DI RICAMBIO
LISTE PIECES DETACHEES
SPARE PARTS LIST
ERSATZTEILLISTE
PIEZAS DE REPUESTO

EURARC 410

Esploso macchina, Dessin appareil, Machine drawing, Explosions Zeichnung des Geräts, Diseño seccionado maquina.



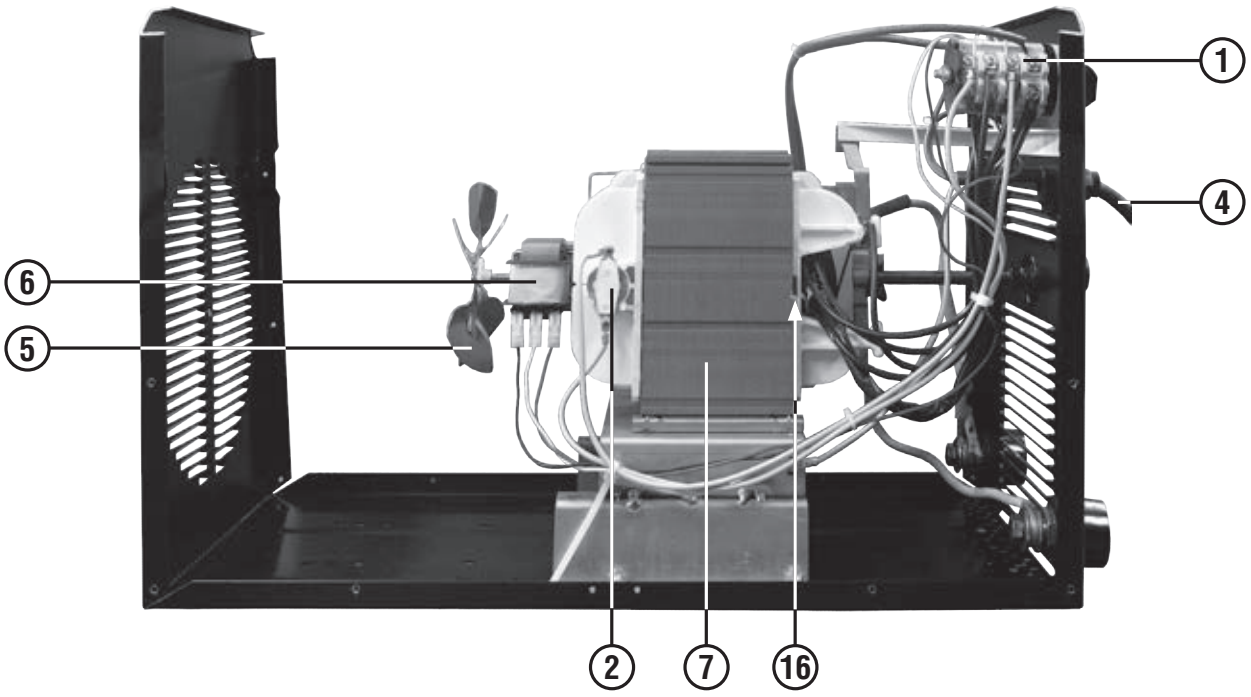

REF.	ELENCO PEZZI DI RICAMBIO PIECES DETACHEES SPARE PARTS LIST ERSATZTEILLISTE PIEZAS DE REPUESTO	CODICE CODE KODE
1	Commutatore Commutateur Switch Schalter Conmutador	121482
2	Termostato Thermostat Thermostat Thermostat Termostato	121719
3	Lampada gialla Temoin lumineux Signal lamp Kontrolleuchte Piloto	122529
4	Cavo alim. 3g4 2.00 M Cable alim. 3g4 2.00 M Mains cable 3g4 2.00 M Netzkabel 3g4 2.00 M Cable alim. 3g4 2.00 M	132294
5	Ventola Helice Fan blade Fluegelrad Aventador	152054
6	Motore Moteur Motor Motor Motor	152073
7	Trasformatore Transformateur Transformer Transformator Transformador	169701
8	Coperchio staffa Couvercle etrier Braket cover Buegeldeckel Tapadera por estribo	312199
9	Impugnatura per volantino Poignee pour volant Knob for handwheel Griff fuer handrad Empunadura por volantito	312200
10	Bandierina indice Index de reglage Regulation indicator Regelungsfahne Banderilla de regulacion	312305
11	Vite regolazione Vis de reglage Regulation screw Regelungschraube Tornillo de ajuste	313747
12	Ruota Roue Wheel Rad Rueda	321389
14	Assieme manopola per commutatore Set poigne pour commutateur Switch knob set Umschaltergriff set Set manjia para conmutador	323101
15	Asse per ruote Axe roues Wheels axle Radachse Eje ruedas	422956
16	Molla tenuta vite regolazione Ressort pour vis de reglage Spring for regulation screw Wickler regelungschraube Muelle por tornillo de ajuste	452119
17	Piedino Embout Foot Fuss Pie	644408
18	Manico Poignee Handle Griff Manija	645507
19	Fianco Partie laterale Side panel Seitenblech Flanco	656046
20	Presa atlas 50mmq Prise atlas 50mmq Atlas socket 50mmq Atlas steckdose 50mmq Enchufe atlas 50mmq	712036
21	Kit mantello Kit capot Cover kit Deckelkit Kit panel de cobertura	981074
22	Kit frontale Kit partie frontal Front panel kit Geraetefront kit Kit frontal	981078
23	Kit pressacavo + ghiera Kit presse cable + embout Kit cable bushing + ring nut Kit kabelhalter + nutmutter Kit prensa cable + virola	990046

Schema elettrico, Schéma électrique, Diagram, Schaltplan, Esquema de conexiones.

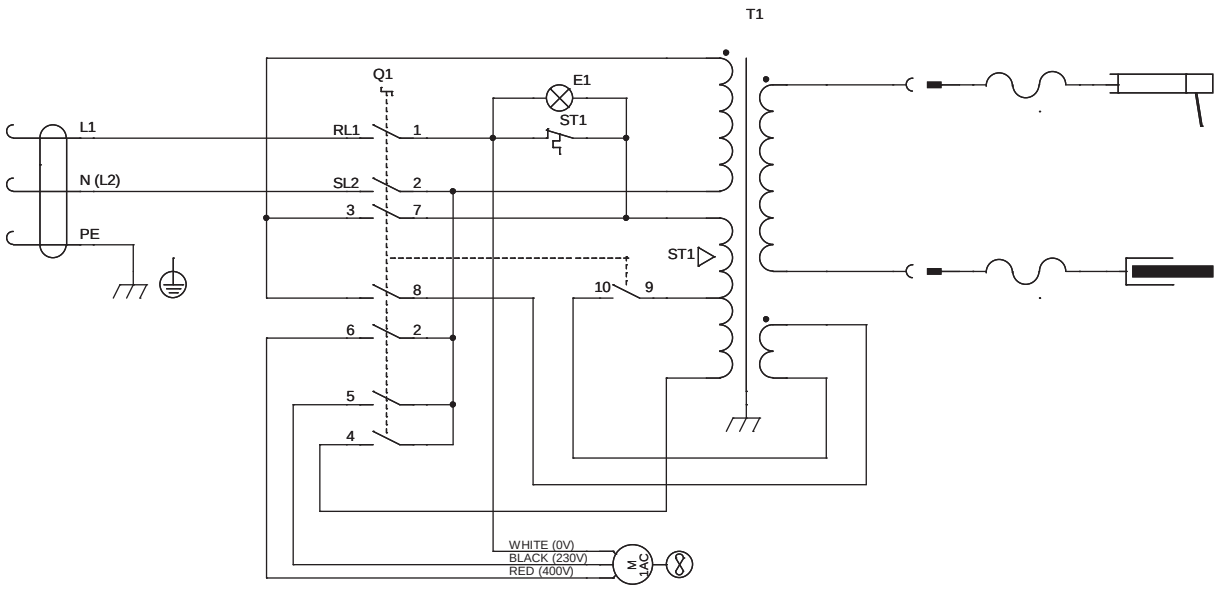

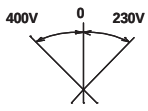

Q1	RL1	SL2	4	5	6	7	8	10
230V	X	X	X	X		X		X
0								
400V	X	X			X		X	X
	1		2			3		9

ELENCO PEZZI DI RICAMBIO
LISTE PIECES DETACHEES
SPARE PARTS LIST
ERSATZTEILLISTE
PIEZAS DE REPUESTO

EURARC 322

TELWIN®

Esploso macchina, Dessin appareil, Machine drawing, Explosions Zeichnung des Geräts, Diseño seccionado maquina.

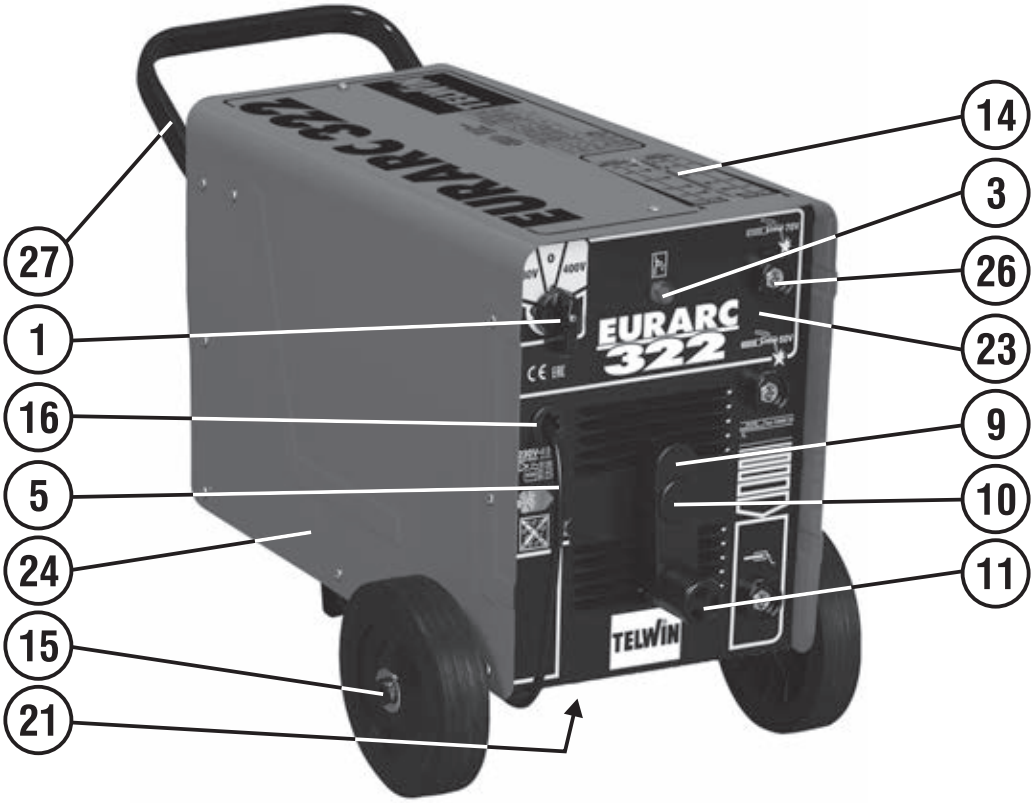

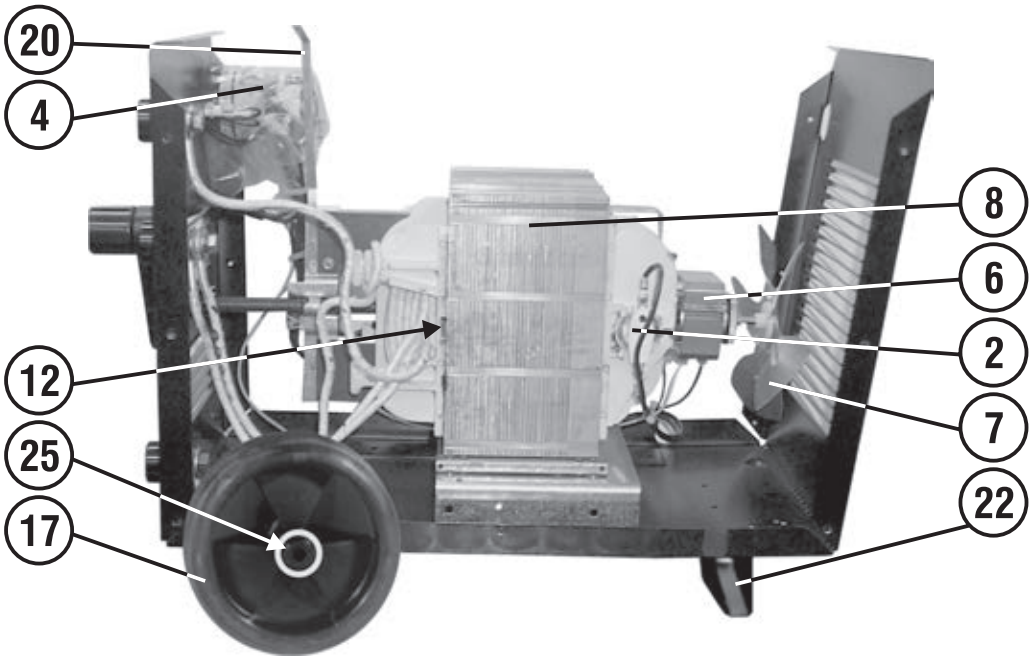

REF.	ELENCO PEZZI DI RICAMBIO PIECES DETACHEES SPARE PARTS LIST ERSATZTEILLISTE PIEZAS DE REPUESTO	CODICE CODE KODE
1	Assieme manopola per commutatore Set poigne pour commutateur Switch knob set Umschaltergriff set Set manjia para conmutador	323101
2	Termostato Thermostat Thermostat Thermostat Termostato	121720
3	Lampada gialla Temoin lumineaux jaune Yellow light Gelbe kontrollampe Piloto amarillo	122707
4	Commutatore Commutateur Switch Schalter Conmutador	121517
5	Cavo alim. 3g2.5 2 M Cable alim. 3g2.5 2 M Mains cable 3g2.5 2 M Netzkabel 3g2.5 2 M Cable alim. 3g2.5 2 M	132267
6	Motore Moteur Motor Motor Motor	152073
7	Ventola Helice Fan blade Fluegelrad Aventador	152111
8	Trasformatore Transformateur Transformer Transformator Transformador	169203
9	Vite regolazione Vis de reglage Regulation screw Regelungschraube Tornillo de ajuste	313747
10	Coperchio staffa Couvercle etrier Braket cover Buegeldeckel Tapadera por estribo	312199
11	Impugnatura per volantino Poignee pour volant Knob for handwheel Griff fuer handrad Empunadura por volantito	312200
12	Molla tenuta vite regolazione Ressort pour vis de reglage Spring for regulation screw Wickler regelungschraube Muelle por tornillo de ajuste	452119

REF.	ELENCO PEZZI DI RICAMBIO PIECES DETACHEES SPARE PARTS LIST ERSATZTEILLISTE PIEZAS DE REPUESTO	CODICE CODE KODE
14	Targhetta trasparente Plaque transparente Transparent plate Durchsichtiges schild Tarjeta transparente	322063
15	Tappo blocca ruote Bouchon ferme roue Wheel locking ring Radsperrestopfen Tapon de bloqueo rueda	322102
16	Pressacavo Presse cable Cable bushing Kabelhalter Prensa cable	322112
17	Ruota fissa Roue fixe Fixed wheel Fixes rad Rueda firme	322201
20	Bandierina indice Index de reglage Regulation indicator Regelungsfahne Banderilla de regulacion	422512
21	Staffa asse ruote Bride axe roues Wheels axle braket Radachsebuegel Estribo eje ruedas	482977
22	Piedino Embout Foot Fuss Pie	644786
23	Frontale Partie frontal Front panel Geraetefront Frontal	642147
24	Kit mantello Kit capot Cover kit Deckel kit Kit panel de cobertura	981094
25	Asse ruote Axe roues Wheels axle Radachse Eje ruedas	681011
26	Presa atlas 25mmq Prise atlas 25mmq Socket atlas 25mmq Steckdose atlas 25mmq Enchufe atlas 25mmq	712035
27	Manico Poignee Handle Handgriff Manija	644785

REF.	ELENCO PEZZI DI RICAMBIO PIECES DETACHEES SPARE PARTS LIST ERSATZTEILLISTE PIEZAS DE REPUESTO	CODICE CODE KODE

Schema elettrico, Schéma électrique, Diagram, Schaltplan, Esquema de conexiones.

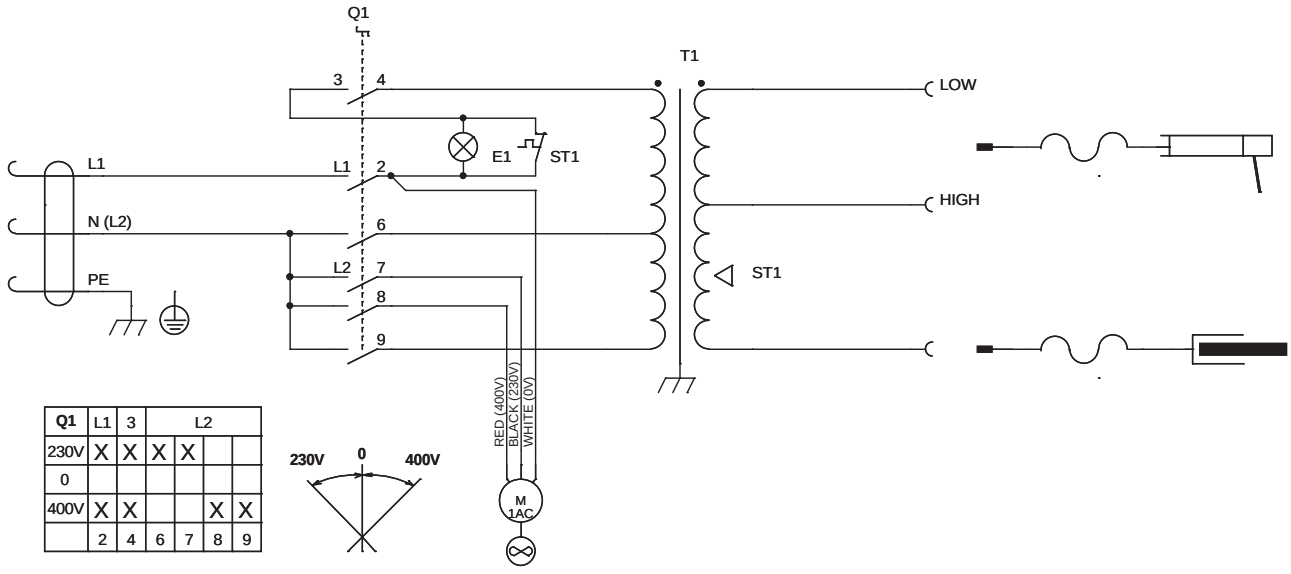

Q1	L1	3	L2			
230V	X	X	X	X		
0						
400V	X	X			X	X
	2	4	6	7	8	9

ELENCO PEZZI DI RICAMBIO
LISTE PIECES DETACHEES
SPARE PARTS LIST
ERSATZTEILLISTE
PIEZAS DE REPUESTO

EURARC 422

Esploso macchina, Dessin appareil, Machine drawing, Explosions Zeichnung des Geräts, Diseño seccionado maquina.

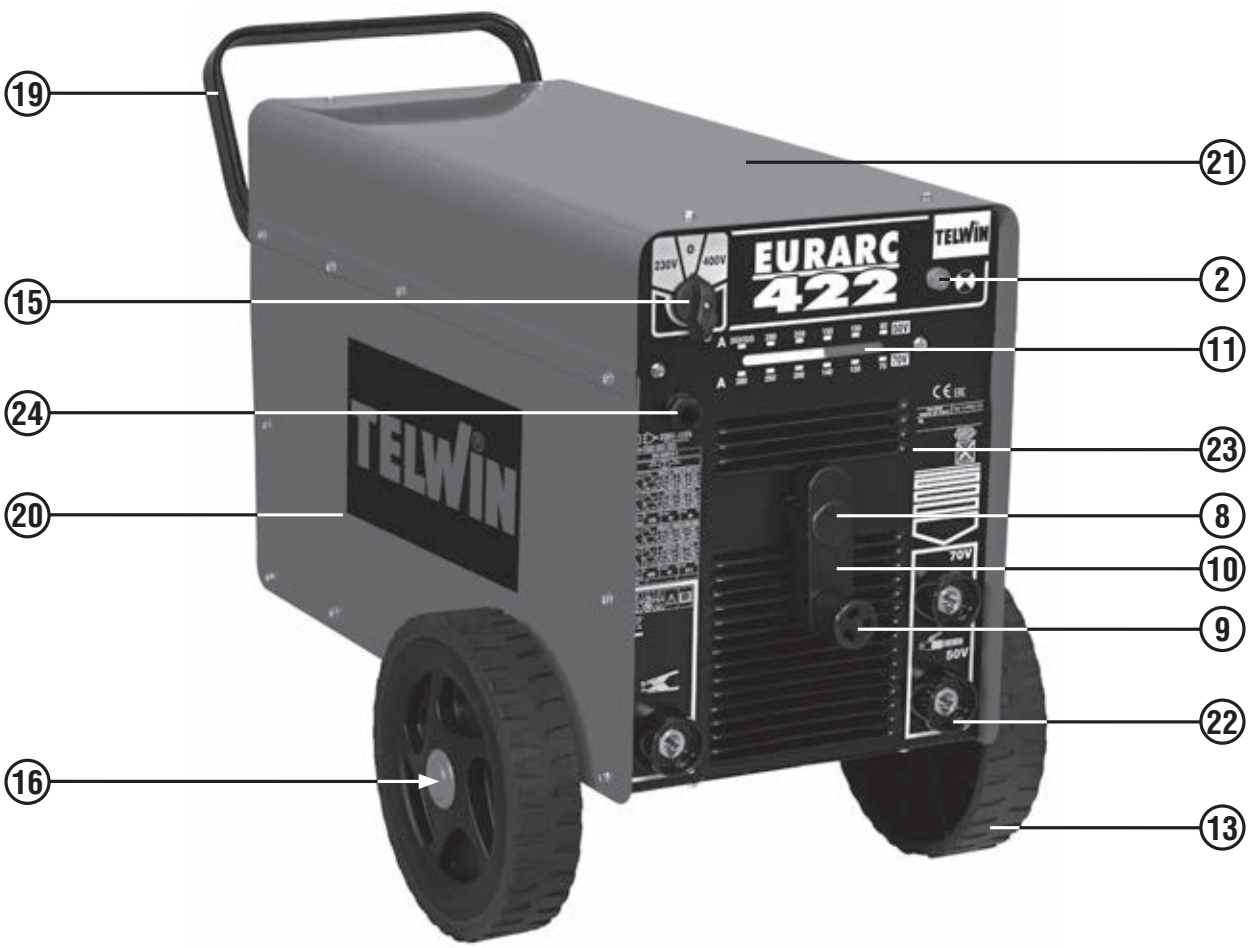

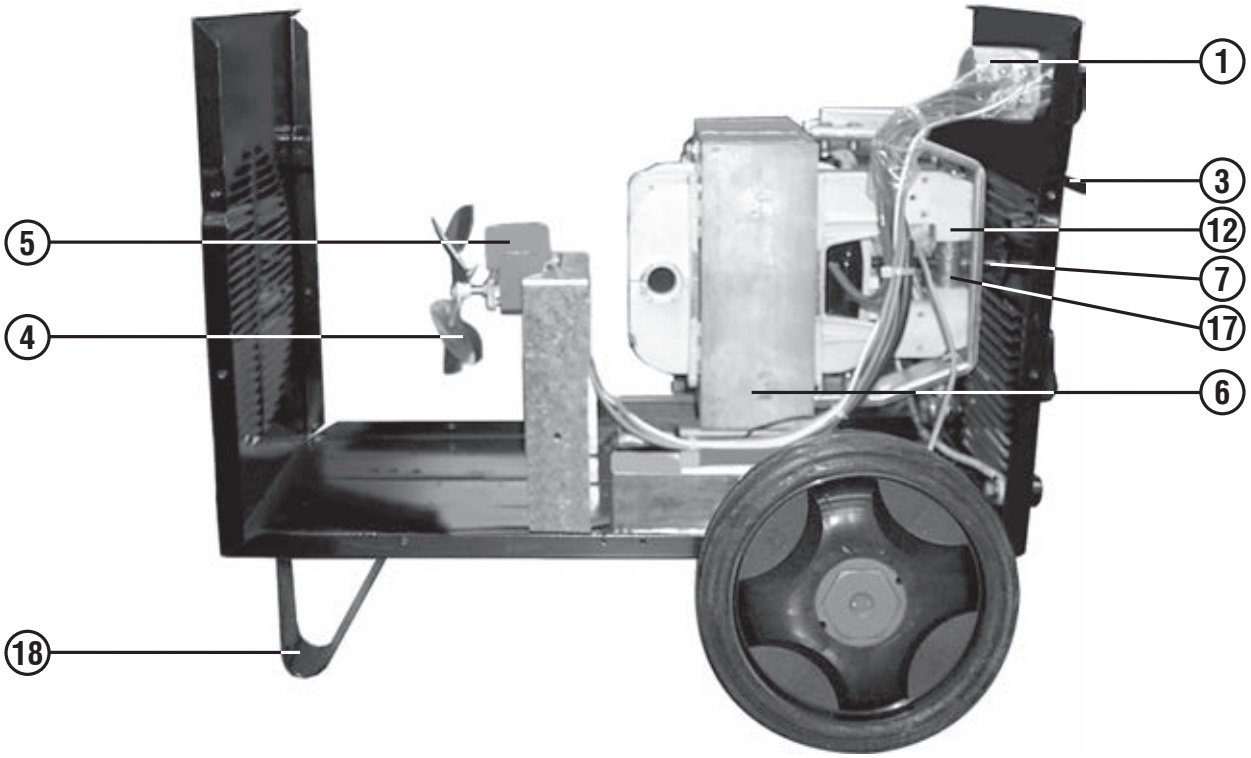

REF.	ELENCO PEZZI DI RICAMBIO PIECES DETACHEES SPARE PARTS LIST ERSATZTEILLISTE PIEZAS DE REPUESTO	CODICE CODE KODE
1	Commutatore Commutateur Switch Schalter Conmutador	121518
2	Lampada Temoin lumineux Pilot lamp Kontrollampe Lampara	122546
3	Cavo alim. 3g6 3 m Cable alim. 3g6 3 m Mains cable 3g6 3 m Netzkabel 3g6 3 m Cable alim. 3g6 3 m	132089
4	Ventola Helice Fan blade Fluegelrad Aventador	152054
5	Motore ventilatore Moteur ventilateur Fan motor Ventilatormotor Motor ventilacion	152110
6	Trasformatore Transformateur Transformer Transformator Transformador	169003
7	Vite regolazione Vis de reglage Regulation screw Regelungschraube Tornillo de ajuste	242045
8	Coperchio staffa Couvercle etrier Braket cover Buegeldeckel Tapadera por estribo	312199
9	Impugnatura per volantino Poignee pour volant Knob for handwheel Griff fuer handrad Empunadura por volantito	312200
10	Maniglia regolazione Poignee regulation Regulation knob Steuerungsgriff Manija regulacion	312207
11	Bandierina indice Index de reglage Regulation indicator Regelungsfahne Banderilla de regulacion	312305
12	Shunt Shunt Shunt Shunt Shunt	313533

REF.	ELENCO PEZZI DI RICAMBIO PIECES DETACHEES SPARE PARTS LIST ERSATZTEILLISTE PIEZAS DE REPUESTO	CODICE CODE KODE
13	Ruota Roue Wheel Rad Rueda	321389
15	Assieme manopola per commutatore Set poigne pour commutateur Switch knob set Umschaltergriff set Set manjia para conmutador	323101
16	Asse per ruote Axe roues Wheels axle Radachse Eje ruedas	422956
17	Giogo Shunt Joke Joch Juego	432308
18	Piedino Embout Foot Fuss Pie	644408
19	Manico Poignee Handle Griff Manija	645507
20	Fianco Partie laterale Side panel Seitenblech Flanco	656046
21	Kit mantello Kit capot Cover kit Deckelkit Kit panel de cobertura	981074
22	Presa atlas 50mmq Prise atlas 50mmq Atlas socket 50mmq Atlas steckdose 50mmq Enchufe atlas 50mmq	712036
23	Kit frontale Kit partie frontal Front panel kit Geraetefront kit Kit frontal	981079
24	Kit pressacavo + ghiera Kit presse cable + embout Kit cable bushing + ring nut Kit kabelhalter + nutmutter Kit prensa cable + virola	990046

REF.	ELENCO PEZZI DI RICAMBIO PIECES DETACHEES SPARE PARTS LIST ERSATZTEILLISTE PIEZAS DE REPUESTO	CODICE CODE KODE

Schema elettrico, Schéma électrique, Diagram, Schaltplan, Esquema de conexiones.

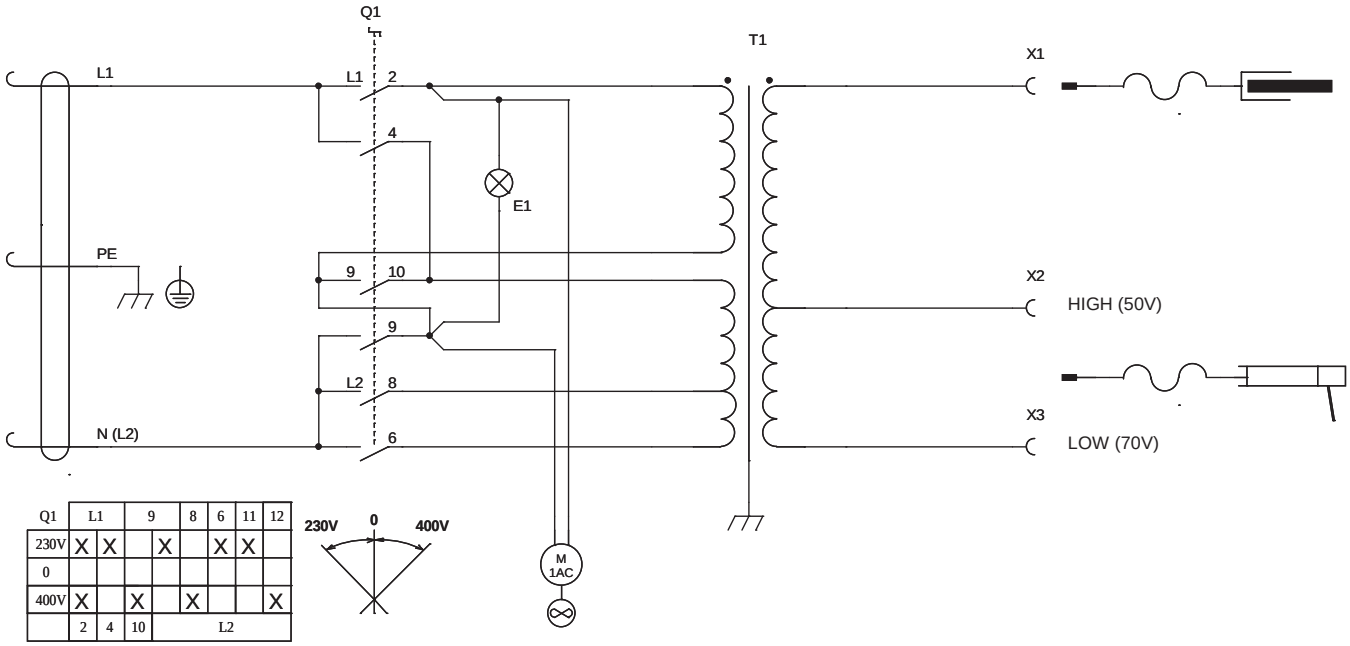

Q1	L1		9		8	6	11	12
230V	X	X		X		X	X	
0								
400V	X		X		X			X
	2	4	10	L2				

ELENCO PEZZI DI RICAMBIO
LISTE PIECES DETACHEES
SPARE PARTS LIST
ERSATZTEILLISTE
PIEZAS DE REPUESTO

EURARC 522

TELWIN®

Esploso macchina, Dessin appareil, Machine drawing, Explosions Zeichnung des Geräts, Diseño seccionado maquina.

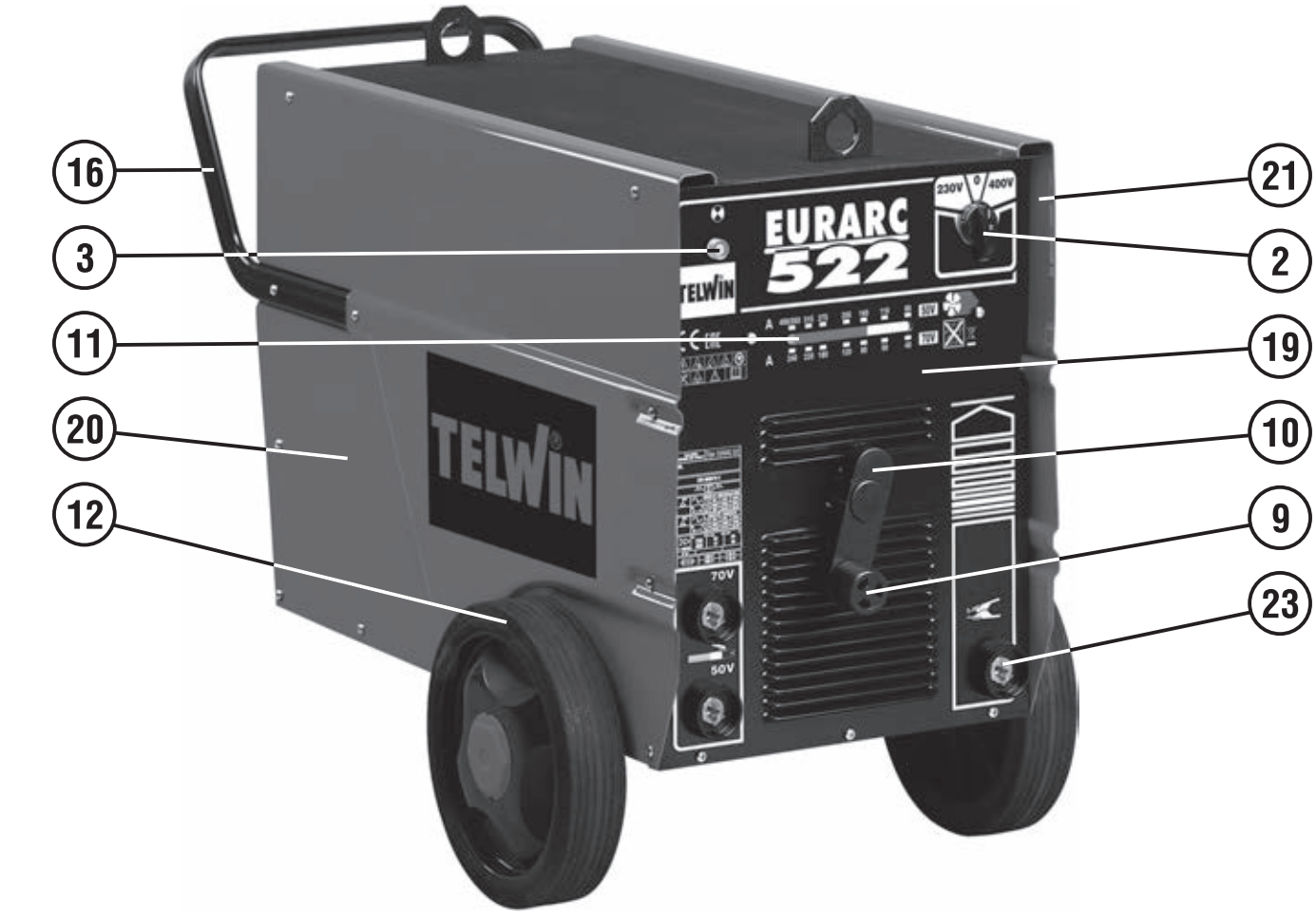

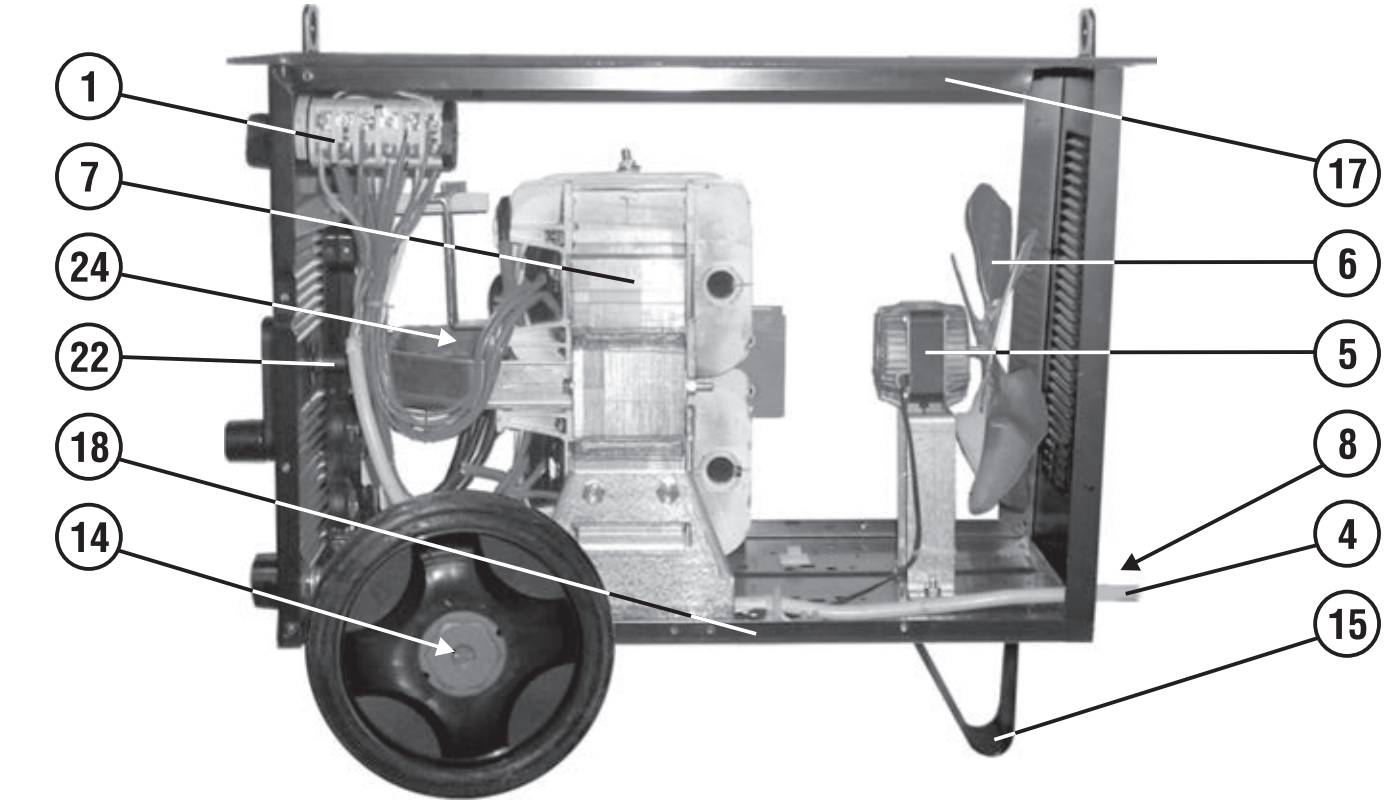

REF.	ELENCO PEZZI DI RICAMBIO PIECES DETACHEES SPARE PARTS LIST ERSATZTEILLISTE PIEZAS DE REPUESTO	CODICE CODE KODE
1	Commutatore Commutateur Switch Schalter Conmutador	121501
2	Assieme manopola per commutatore Set poigne pour commutateur Switch knob set Umschaltergriff set Set manjia para conmutador	323101
3	Lampada verde Temoin lumineux vert Green pilot lamp Gruene kontrollampe Piloto verde	122596
4	Cavo alim. 3g6 4 m Cable alim. 3g6 4 m Mains cable 3g6 4 m Netzkabel 3g6 4 m Cable alim. 3g6 4 m	132295
5	Motore Moteur Motor Motor Motor	152083
6	Ventola Helice Fan blade Fluegelrad Aventador	152113
7	Kit trasformatore Kit transformateur Transformer kit Transformator kit Kit transformador	980436
8	Pressacavo Presse cable Cable bushing Kabelhalter Prensa cable	312068
9	Impugnatura per volantino Poignee pour volant Knob for handwheel Griff fuer handrad Empunadura por volantito	312200
10	Maniglia regolazione Poignee regulation Regulation knob Steuerungsgriff Manija regulacion	312207
11	Bandierina indice Index de reglage Regulation indicator Regelungsfahne Banderilla de regulacion	312305
12	Ruota Roue Wheel Rad Rueda	321389
14	Asse per ruote Axes pour roue Wheels axle Raederachse Eje por rueda	422940
15	Piedino Embout Foot Fuss Pie	644408
16	Manico Poignee Handle Handgriff Manija	644465
17	Mantello Capot Cover Deckel Panel de cobertura	645330
18	Kit fondo Kit chassis Bottom kit Bodenteil kit Kit fondo	980615
19	Kit frontale Kit partie frontal Front panel kit Geraetefront kit Kit frontal	980616
20	Fianco destro Partie lateral droite Right side panel Rechte seite Flanco derecho	650595
21	Fianco sinistro Partie laterale gauche Left side Linke seite Flanco izquierdo	650596
22	Kit vite regolazione Kit vis de reglage Regulation screw kit Regelungschraube kit Kit tornillo de ajuste	980438
23	Presa atlas 50mmq Prise atlas 50mmq Atlas socket 50mmq Atlas steckdose 50mmq Enchufe atlas 50mmq	712036
24	Kit shunt Kit shunt Shunt kit Shunt kit Kit shunt	980449

Schema elettrico, Schéma électrique, Diagram, Schaltplan, Esquema de conexiones.

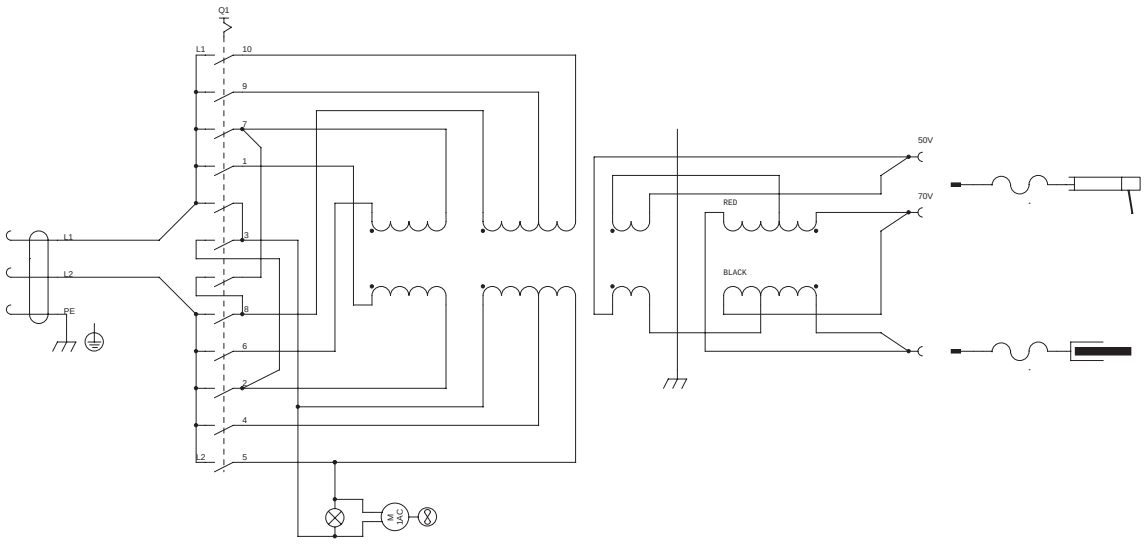

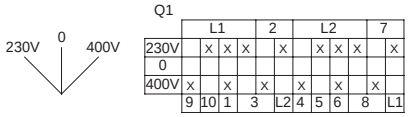

Q1

	L1			2		L2				7	
230V		x	x	x		x		x	x	x		x
0												
400V	x			x		x	x			x		
	9	10	1		3	L2	4	5	6		8	L1

ELENCO PEZZI DI RICAMBIO
LISTE PIECES DETACHEES
SPARE PARTS LIST
ERSATZTEILLISTE
PIEZAS DE REPUESTO

LINEAR 350i

Esploso macchina, Dessin appareil, Machine drawing, Explosions Zeichnung des Geräts, Diseño seccionado maquina.



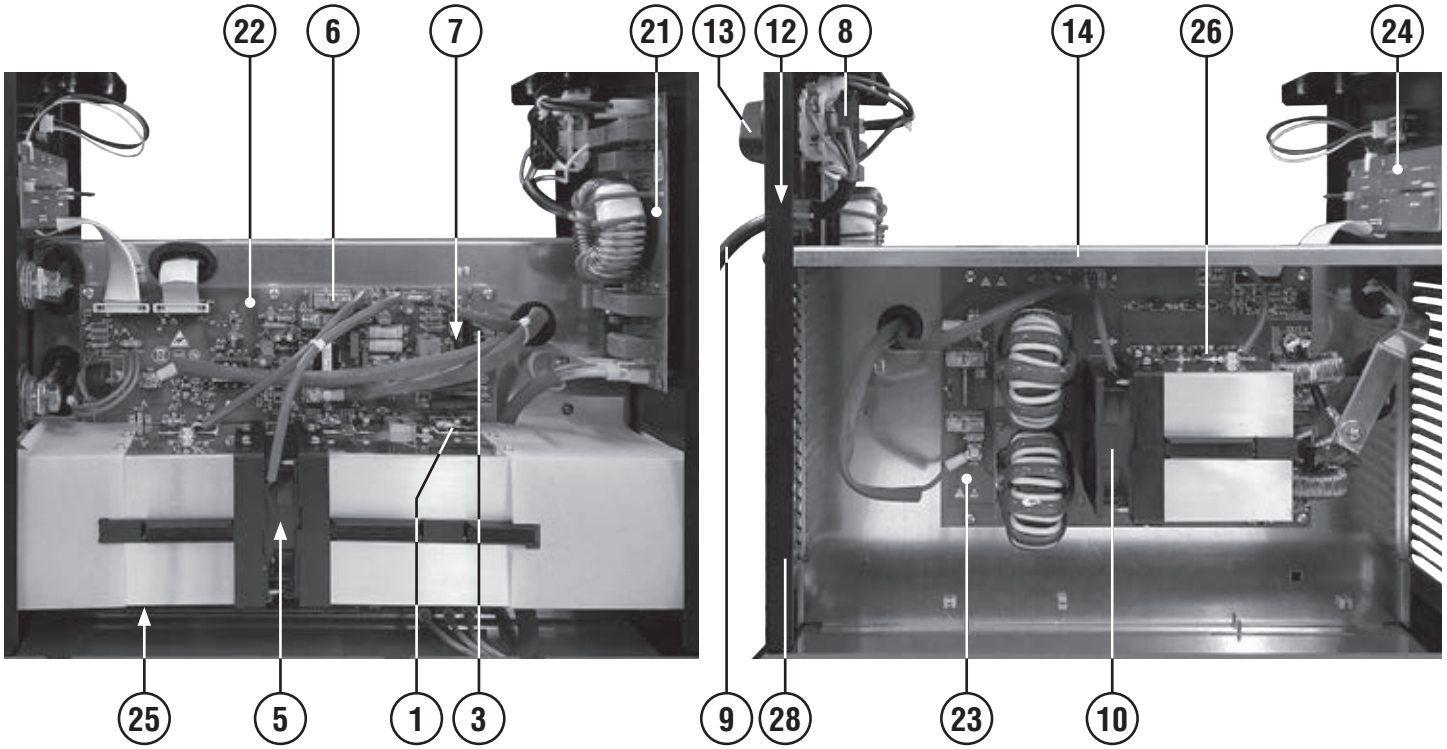

REF.	ELENCO PEZZI DI RICAMBIO PIECES DETACHEES SPARE PARTS LIST ERSATZTEILLISTE PIEZAS DE REPUESTO	CODICE CODE KODE
1	Ponte monofase Pont monophase Single phase bridge Einfasige brücke Puente monofasico	111017
3	Rele' Relais Relais Relais Conectador	111252
4	Kit display linear Kit display linear Kit display linear Kit display linear Kit display linear	112003
5	Condensatore Condensateur Capacitor Kondensator Condensador	113122
6	Rele' Relais Relais Relais Relais	116320
7	Res. Met. 10r 2w 5% fuse Res. Met. 10r 2w 5% fuse Res. Met. 10r 2w 5% fuse Res. Met. 10r 2w 5% fuse Res. Met. 10r 2w 5% fuse	116962
8	Commutatore Commutateur Switch Schalter Conmutador	122017
9	Cavo alim. 4g2.5 2 M Cable alim. 4g2.5 2 M Mains cable 4g2.5 2 M Netzkabel 4g2.5 2 M Cable alim. 4g2.5 2 M	132244
10	Ventilatore 12vdc 92x 92x25 Ventilateur 12vdc 92x 92x25 Fan 12vdc 92x 92x25 Ventilator 12vdc 92x 92x25 Ventilador 12vdc 92x 92x25	152361
12	Pressacavo Presse cable Cable bushing Kabelhalter Prensa cable	312068
13	Assieme manopola per commutatore Set poigne pour commutateur Switch knob set Umschaltergriff set Set manjia para conmutador	323101
14	Diaframma Diaphragme Diaphragm Diaphragma Diafragma	485481

REF.	ELENCO PEZZI DI RICAMBIO PIECES DETACHEES SPARE PARTS LIST ERSATZTEILLISTE PIEZAS DE REPUESTO	CODICE CODE KODE
16	Fondo Chassis Bottom Bodenteil Fondo	645965
17	Mantello Capot Cover Deckel Panel de cobertura	651276
18	Fianco Partie lateral Side panel Seitenblech Flanco	656320
19	Presa atlas 50mmq Prise atlas 50mmq Socket atlas 50mmq Steckdose atlas 50mmq Enchufe atlas 50mmq	804197
20	Kit manopola nera Kit poignee noir Black knob kit Schwarze griff kit Kit manija negra	980771
21	Kit scheda filtro ingresso Kit platine filtre input Input filter card kit Input filterkarte kit Kit tarjeta filtro input	980947
22	Kit scheda primario completa Kit platine primaire complete Complete primary pcb kit Komplette primärtrafokarte kit Kit tarjeta primario completa	982474
23	Kit scheda secondario completa Kit platine secondaire complete Complete secundary pcb kit Komplette sekundärtrafokarte kit Kit tarjeta secundario completa	982475
24	Kit scheda controllo Kit carte controle Control board kit Steuerungskarte kit Kit tarjeta control	982476
25	Kit igbt Kit igbt Kit igbt Kit igbt Kit igbt	982477
26	Kit diodi Kit diodes Diodes kit Dioden kit Kit diodos	982478
27	Kit frontale Kit partie frontal Front panel kit Gerätefront kit Kit frontal	982465

REF.	ELENCO PEZZI DI RICAMBIO PIECES DETACHEES SPARE PARTS LIST ERSATZTEILLISTE PIEZAS DE REPUESTO	CODICE CODE KODE
28	Kit retro Kit partie arriere Back panel kit Rückseite kit Kit trasera	982479
29	Kit manico Kit poignee Handle kit Handgriff kit Kit manija	982467
30	Kit piedini Kit embouts Feet kit Fuss kit Kit pies	982468

Schema elettrico, Schéma électrique, Diagram, Schaltplan, Esquema de conexiones.

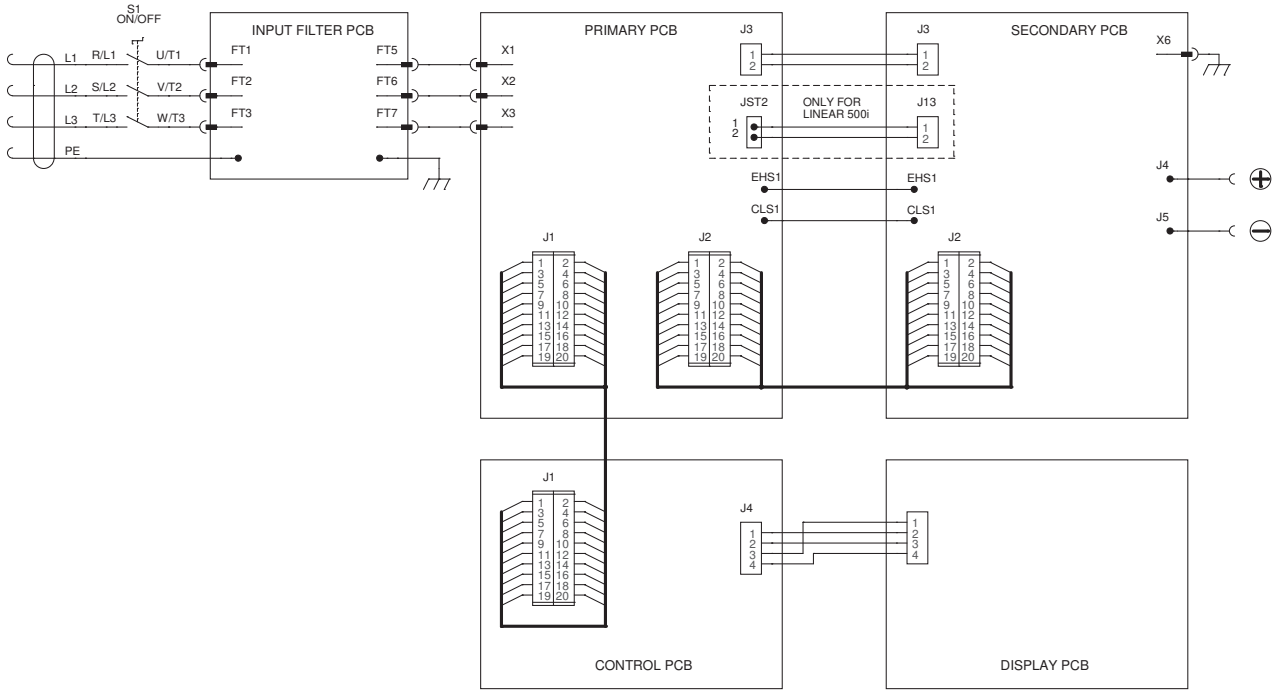

ELENCO PEZZI DI RICAMBIO
LISTE PIECES DETACHEES
SPARE PARTS LIST
ERSATZTEILLISTE
PIEZAS DE REPUESTO

LINEAR 450i

Esploso macchina, Dessin appareil, Machine drawing, Explosions Zeichnung des Geräts, Diseño seccionado maquina.



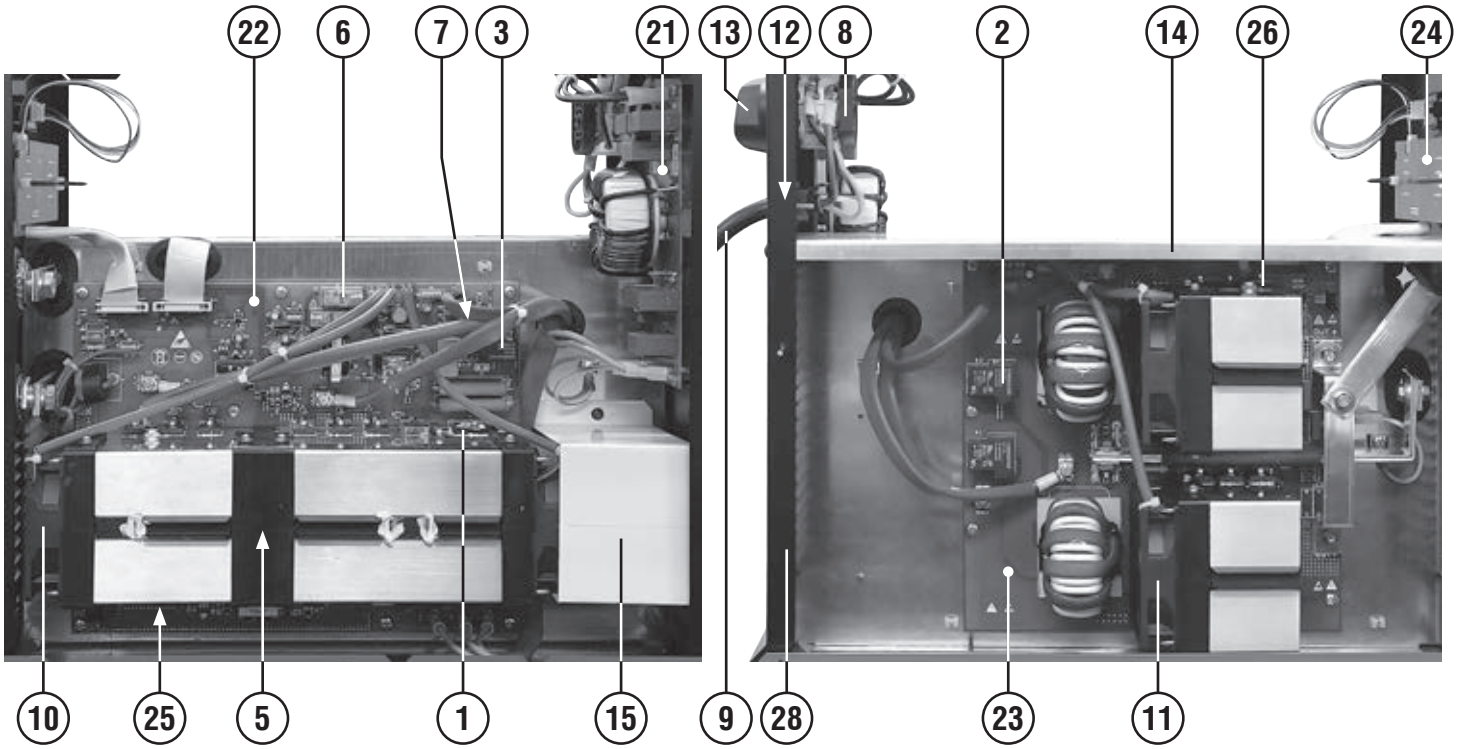

REF.	ELENCO PEZZI DI RICAMBIO PIECES DETACHEES SPARE PARTS LIST ERSATZTEILLISTE PIEZAS DE REPUESTO	CODICE CODE KODE
1	Ponte monofase Pont monophase Single phase bridge Einfasige brücke Puente monofasico	111017
2	Rele Relais Relais Relais Conectador	111211
3	Rele' Relais Relais Relais Conectador	111252
4	Kit display linear Kit display linear Kit display linear Kit display linear Kit display linear	112003
5	Condensatore Condensateur Capacitor Kondensator Condensador	113122
6	Rele' Relais Relais Relais Relais	116320
7	Res. Met. 10r 2w 5% fuse Res. Met. 10r 2w 5% fuse Res. Met. 10r 2w 5% fuse Res. Met. 10r 2w 5% fuse Res. Met. 10r 2w 5% fuse	116962
8	Commutatore Commutateur Switch Schalter Conmutador	122017
9	Cavo alim. 4g4 2 m Cable alim. 4g4 2 m Mains cable 4g4 2 m Netzkabel 4g4 2 m Cable alim. 4g4 2 m	132206
10	Ventilatore 12vdc 92x 92x25 Ventilateur 12vdc 92x 92x25 Fan 12vdc 92x 92x25 Ventilator 12vdc 92x 92x25 Ventilador 12vdc 92x 92x25	152361
11	Ventilatore Ventilateur Fan Ventilator Ventilador	152904
12	Pressacavo Presse cable Cable bushing Kabelhalter Prensa cable	312068
13	Assieme manopola per commutatore Set poigne pour commutateur Switch knob set Umschaltergriff set Set manjia para conmutador	323101
14	Diaframma Diaphragme Diaphragm Diaphragma Diafragma	485481
15	Convogliatore Conveyeur Conveyor Lüfterabdeckung Conveyor	485893
16	Fondo Chassis Bottom Bodenteil Fondo	645965
17	Mantello Capot Cover Deckel Panel de cobertura	651276
18	Fianco Partie lateral Side panel Seitenblech Flanco	656305
19	Presa atlas 50mmq Prise atlas 50mmq Socket atlas 50mmq Steckdose atlas 50mmq Enchufe atlas 50mmq	804197
20	Kit manopola nera Kit poignee noir Black knob kit Schwarze griff kit Kit manija negra	980771
21	Kit scheda filtro ingresso Kit platine filtre input Input filter card kit Input filterkarte kit Kit tarjeta filtro input	980947
22	Kit scheda primario Kit platine primaire Kit primary control pcb Kit primärsteurungskarte Kit tarjeta primario	982460
23	Kit scheda secondario Kit fiche secondaire Secundary pcb kit Sekundärtrafokarte kit Kit tarjeta secundario	982461
24	Kit scheda controllo Kit carte controle Control board kit Steuerungskarte kit Kit tarjeta control	982462
25	Kit igbt Kit igbt Kit igbt Kit igbt Kit igbt	982463
26	Kit diodi Kit diodes Diodes kit Dioden kit Kit diodos	982464
27	Kit frontale Kit partie frontal Front panel kit Gerätefront kit Kit frontal	982465
28	Kit retro Kit partie arriere Back panel kit Rückseite kit Kit trasera	982466
29	Kit manico Kit poignee Handle kit Handgriff kit Kit manija	982467
30	Kit piedini Kit embouts Feet kit Fuss kit Kit pies	982468

Schema elettrico, Schéma électrique, Diagram, Schaltplan, Esquema de conexiones.

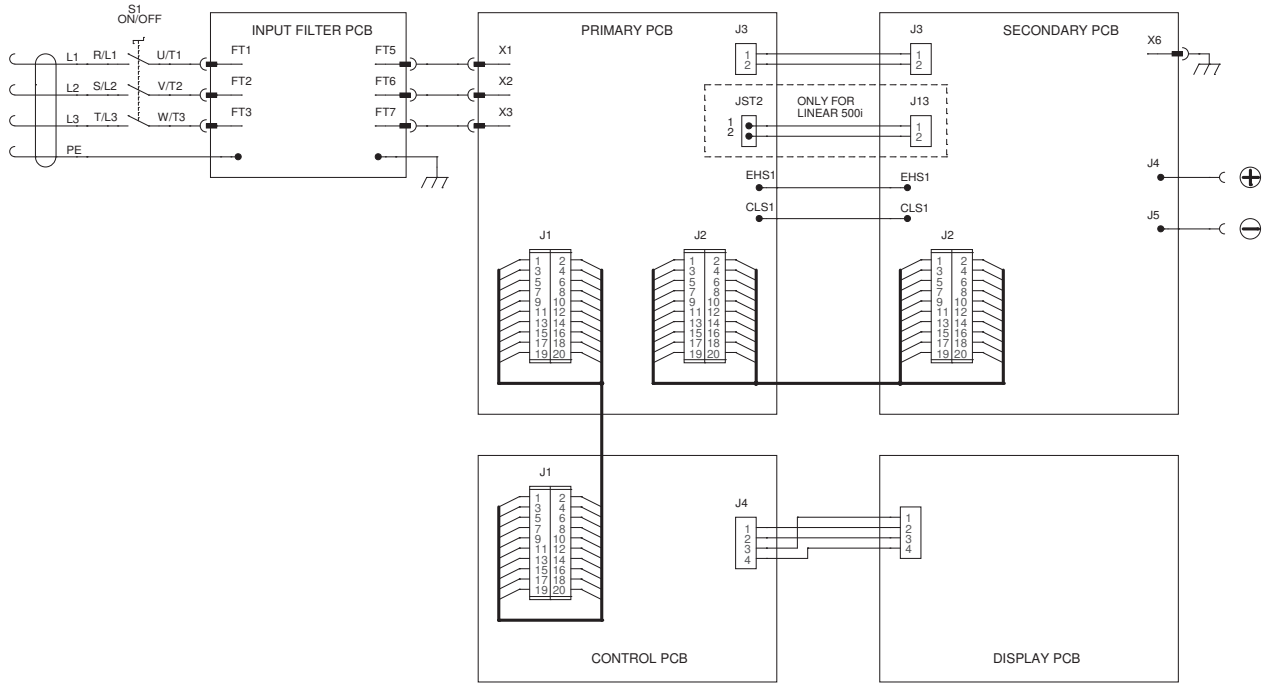

ELENCO PEZZI DI RICAMBIO
LISTE PIECES DETACHEES
SPARE PARTS LIST
ERSATZTEILLISTE
PIEZAS DE REPUESTO

LINEAR 500i XD

Esploso macchina, Dessin appareil, Machine drawing, Explosions Zeichnung des Geräts, Diseño seccionado maquina.



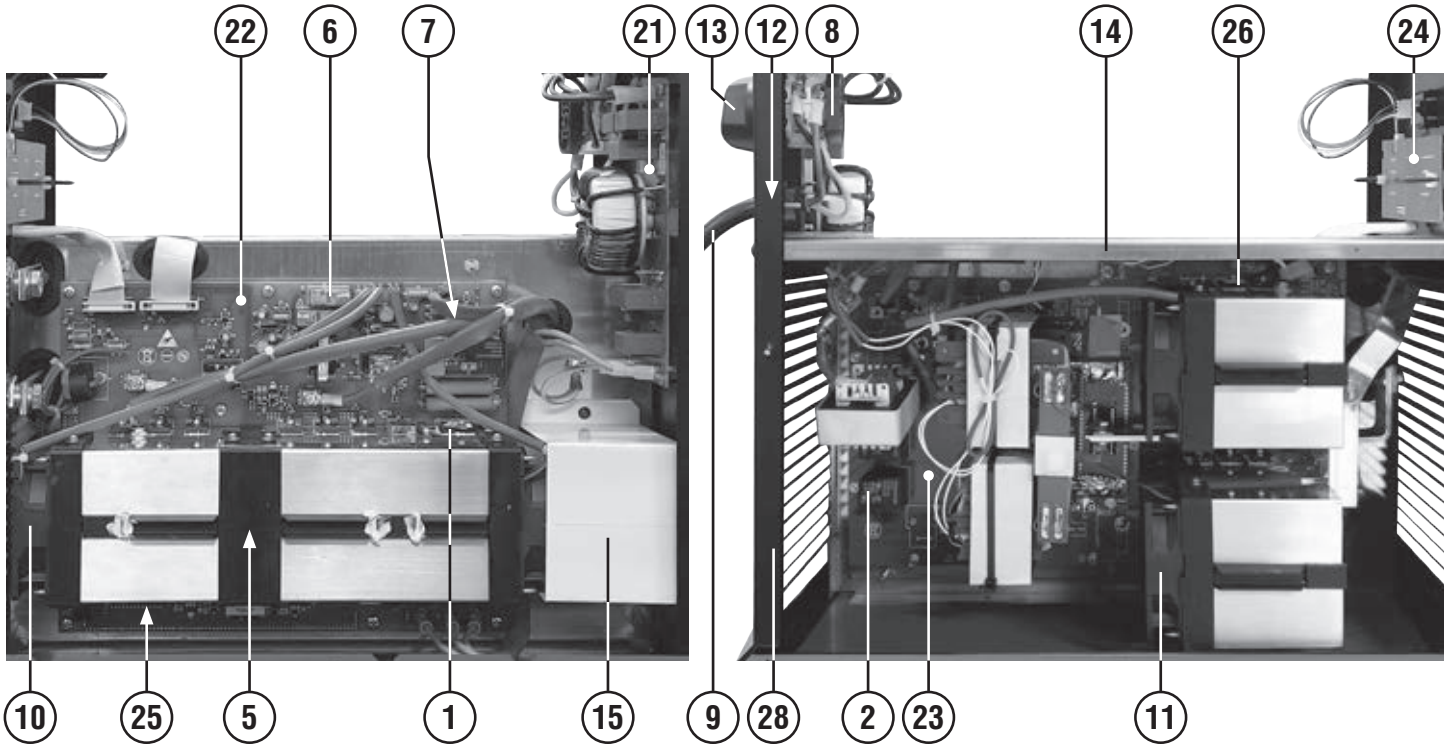

REF.	ELENCO PEZZI DI RICAMBIO PIECES DETACHEES SPARE PARTS LIST ERSATZTEILLISTE PIEZAS DE REPUESTO	CODICE CODE KODE
1	Ponte monofase Pont monophase Single phase bridge Einfasige brücke Puente monofasico	111017
2	Rele Relais Relais Relais Conectador	111211
3	Kit piedini Kit embouts Feet kit Fuss kit Kit pies	982468
4	Kit display linear Kit display linear Kit display linear Kit display linear Kit display linear	112003
5	Condensatore Condensateur Capacitor Kondensator Condensador	113122
6	Rele' Relais Relais Relais Relais	116320
7	Res. Met. 10r 2w 5% fuse Res. Met. 10r 2w 5% fuse Res. Met. 10r 2w 5% fuse Res. Met. 10r 2w 5% fuse Res. Met. 10r 2w 5% fuse	116962
8	Commutatore Commutateur Switch Schalter Conmutador	121505
9	Cavo alim.Fror 4g06.00 L=03.00 Cable alim. Fror 4g06.00 L=03.00 Mains cable fror 4g06.00 L=03.00 Netzkabel fror 4g06.00 L=03.00 Cable alim. Fror 4g06.00 L=03.00	132449
10	Ventilatore 12vdc 92x 92x25 Ventilateur 12vdc 92x 92x25 Fan 12vdc 92x 92x25 Ventilator 12vdc 92x 92x25 Ventilador 12vdc 92x 92x25	152361
11	Ventilatore Ventilateur Fan Ventilator Ventilador	152904
12	Pressacavo Presse cable Cable bushing Kabelhalter Prensa cable	312068
13	Assieme manopola per commutatore Set poigne pour commutateur Switch knob set Umschaltergriff set Set manjia para conmutador	323101
14	Diaframma Diaphragme Diaphragm Diaphragma Diafragma	485490
15	Convogliatore Conveyeur Conveyor Lüfterabdeckung Conveyor	485893
16	Fondo Chassis Bottom Bodenteil Fondo	645965
17	Mantello Capot Cover Deckel Panel de cobertura	651276
18	Fianco Partie laterale Side panel Seitenblech Flanco	656324
19	Presa atlas 50mmq Prise atlas 50mmq Socket atlas 50mmq Steckdose atlas 50mmq Enchufe atlas 50mmq	804197
20	Kit manopola nera Kit poignee noir Black knob kit Schwarze griff kit Kit manija negra	980771
21	Kit scheda filtro ingresso Kit platine filtre input Input filter card kit Input filterkarte kit Kit tarjeta filtro input	980947
22	Kit scheda primario completa Kit platine primaire complete Complete primary pcb kit Komplette primärtrafokarte kit Kit tarjeta primario completa	982554
23	Kit scheda secondario completa Kit platine secondaire complete Complete secondary pcb kit Komplette sekundärtrafokarte kit Kit tarjeta secundario completa	982555
24	Kit scheda controllo Kit fiche de controle Control pcb kit Kontrollekarte kit Kit tarjeta de controlo	982556
25	Kit igbt Kit igbt Kit igbt Kit igbt Kit igbt	981982
26	Kit diodi Kit diodes Diodes kit Dioden kit Kit diodos	982464
27	Kit frontale Kit partie frontal Front panel kit Gerätefront kit Kit frontal	982465
28	Kit retro Kit partie arriere Back panel kit Rückseite kit Kit trasera	982557
29	Kit manico Kit poignee Handle kit Handgriff kit Kit manija	982467

Schema elettrico, Schéma électrique, Diagram, Schaltplan, Esquema de conexiones.

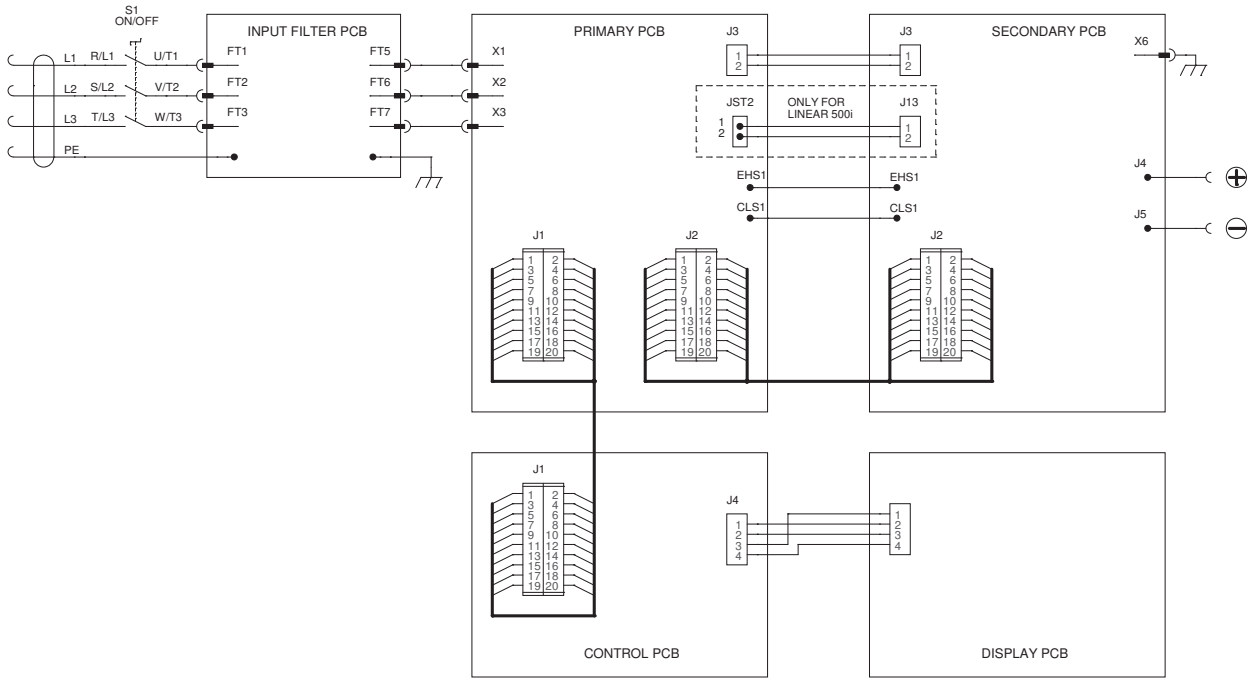

ELENCO PEZZI DI RICAMBIO
LISTE PIECES DETACHEES
SPARE PARTS LIST
ERSATZTEILLISTE
PIEZAS DE REPUESTO

LINEAR 280
LINEAR 340

Esploso macchina, Dessin appareil, Machine drawing, Explosions Zeichnung des Geräts, Diseño seccionado maquina.

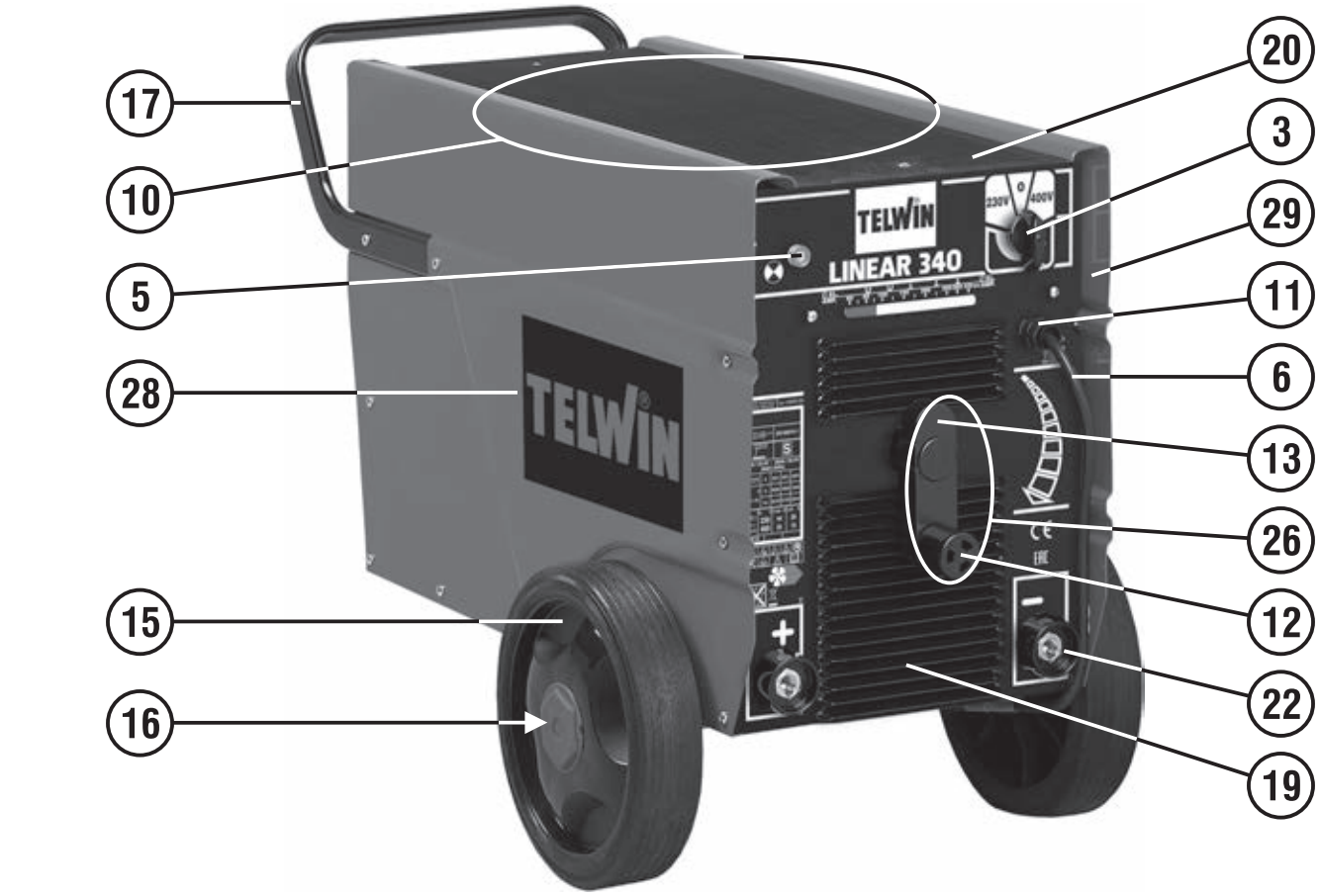

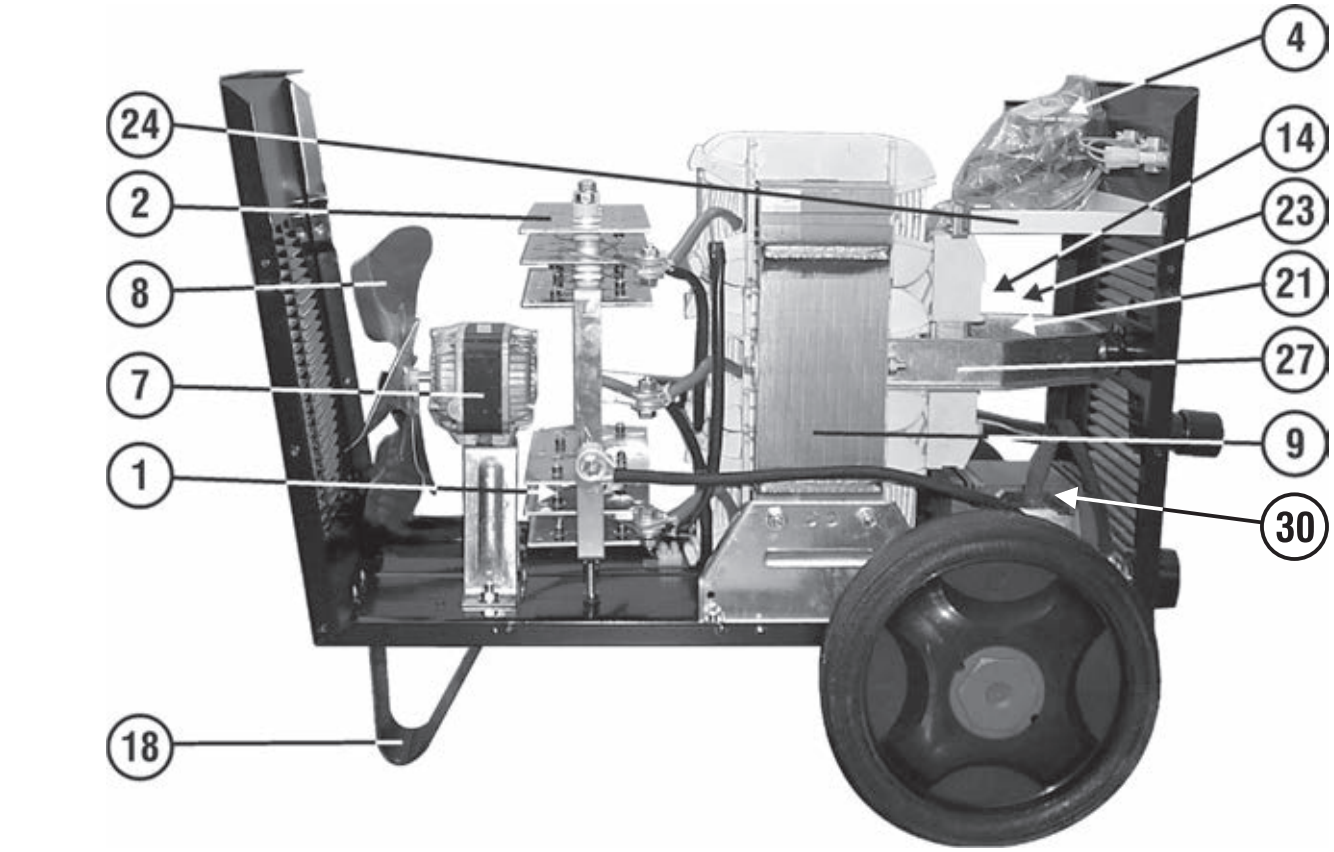

REF.	ELENCO PEZZI DI RICAMBIO PIECES DETACHEES SPARE PARTS LIST ERSATZTEILLISTE PIEZAS DE REPUESTO	LINEAR 280	LINEAR 340
		CODICE	CODE KODE
1	Protezione raddrizzatore Protection redresseur Rectifier protection Gleichrichterschutz Protector rectificador	112182	112182
2	Raddrizzatore Redresseur Rectifier Gleichrichter Rectificador	112315	112316
3	Assieme manopola per commutatore Set poigne pour commutateur Switch knob set Umschaltergriff set Set manjia para conmutador	323101	323101
4	Commutatore Commutateur Switch Schalter Conmutador	122646	122392
5	Lampada verde Temoin lumineux vert Green pilot lamp Gruene kontrollampe Piloto verde	122596	122596
6	Cavo alim. 4g4 4.5 M Cable alim. 4g4 4.5 M Mains cable 4g4 4.5 M Netzkabel 4g4 4.5 M Cable alim. 4g4 4.5 M	132282	132283
7	Motore Moteur Motor Motor Motor	152083	152083
8	Ventola Helice Fan blade Fluegelrad Aventador	152113	152113
9	Trasformatore Transformateur Transformer Transformator Transformador	990358	990359
10	Kit mantello Kit capot Cover kit Deckel kit Kit panel de cobertura	980375	980375
11	Kit pressacavo Kit presse cable Cable bushing kit Kabelhalter kit Kit prensa cable	990439	990439
12	Impugnatura per volantino Poignee pour volant Knob for handwheel Griff fuer handrad Empunadura por volantito	312200	312200
13	Volantino di regolazione Poignee de reglage Handwheel Regelungshandrad Volante de regulacion	312242	312242
14	Shunt Shunt Shunt Shunt Shunt	313252	313253
15	Ruota Roue Wheel Rad Rueda	321389	321389
16	Asse per ruote Axe roues Wheels axle Radachse Eje ruedas	422956	422956
17	Manico Poignee Handle Handgriff Manija	644407	644407
18	Piedino Embout Foot Fuss Pie	644408	644408
19	Frontale Partie frontal Front panel Geraetefront Frontal	649105	649106
20	Mantello Capot Cover Deckel Panel de cobertura	645302	645302
21	Giogo Traverse shunt Joke Joch Juego	681171	681171
22	Presa atlas 50mmq Prise atlas 50mmq Atlas socket 50mmq Atlas steckdose 50mmq Enchufe atlas 50mmq	712036	712036
23	Vite regolazione Vis de reglage Regulation screw Regelungschraube Tornillo de ajuste	242095	242096
24	Bandierina indice Index de reglage Regulation indicator Regelungsfahne Banderilla de regulacion	312305	312305
26	Kit volantino completo Kit poignee de reglage Handweelkit Regelungshandradkit Kit volanta de regulacion	990367	990367
27	Cavallotto U bolt U bolt U bolt U bolt	482119	482120
28	Fianco destro Partie lateral droite Right side panel Rechte seite Flanco derecho	655937	655937
29	Fianco sinistro Partie laterale gauche Left side Linke seite Flanco izquierdo	655936	655936
30	Reattanza Reactance Reactance Drossel Induccion	------	169378

Schema elettrico, Schéma électrique, Diagram, Schaltplan, Esquema de conexiones.

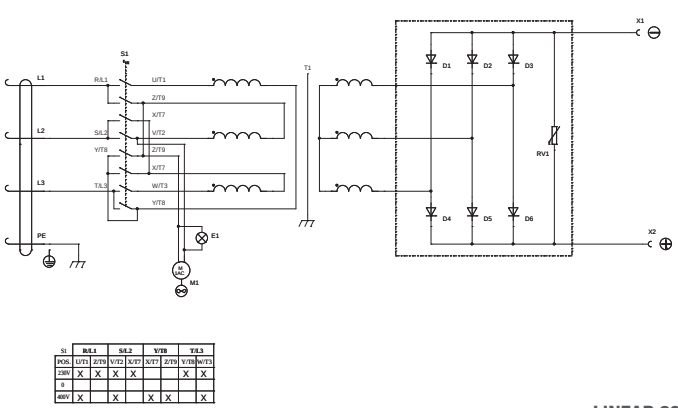

S1	R/L1	S/L2	Y/T8	T/L3	
POS.	U/T1	Z/T9	V/T2	X/T7	Z/T9	Y/T8	W/T3	Y/T8
230V	X	X	X	X			X	X
0								
400V	X		X		X	X		X

LINEAR 280

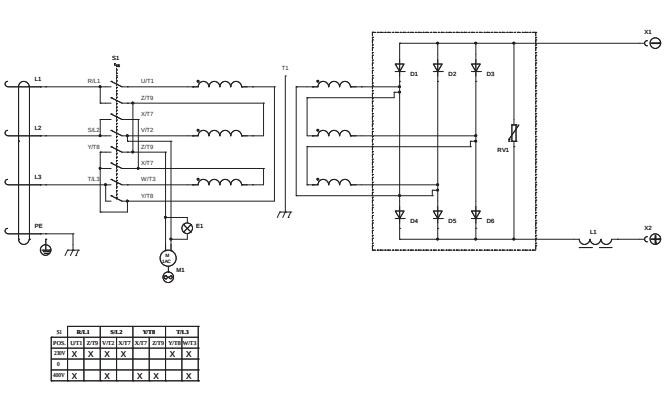

S1	R/L1	S/L2	Y/T8	T/L3	
POS.	U/T1	Z/T9	V/T2	X/T7	Z/T9	Y/T8	W/T3	Y/T8
230V	X	X	X	X			X	X
0								
400V	X		X		X	X		X

LINEAR 340

ELENCO PEZZI DI RICAMBIO
LISTE PIECES DETACHEES
SPARE PARTS LIST
ERSATZTEILLISTE
PIEZAS DE REPUESTO

LINEAR 430HD

TELWIN

Esploso macchina, Dessin appareil, Machine drawing, Explosions Zeichnung des Geräts, Diseño seccionado maquina.

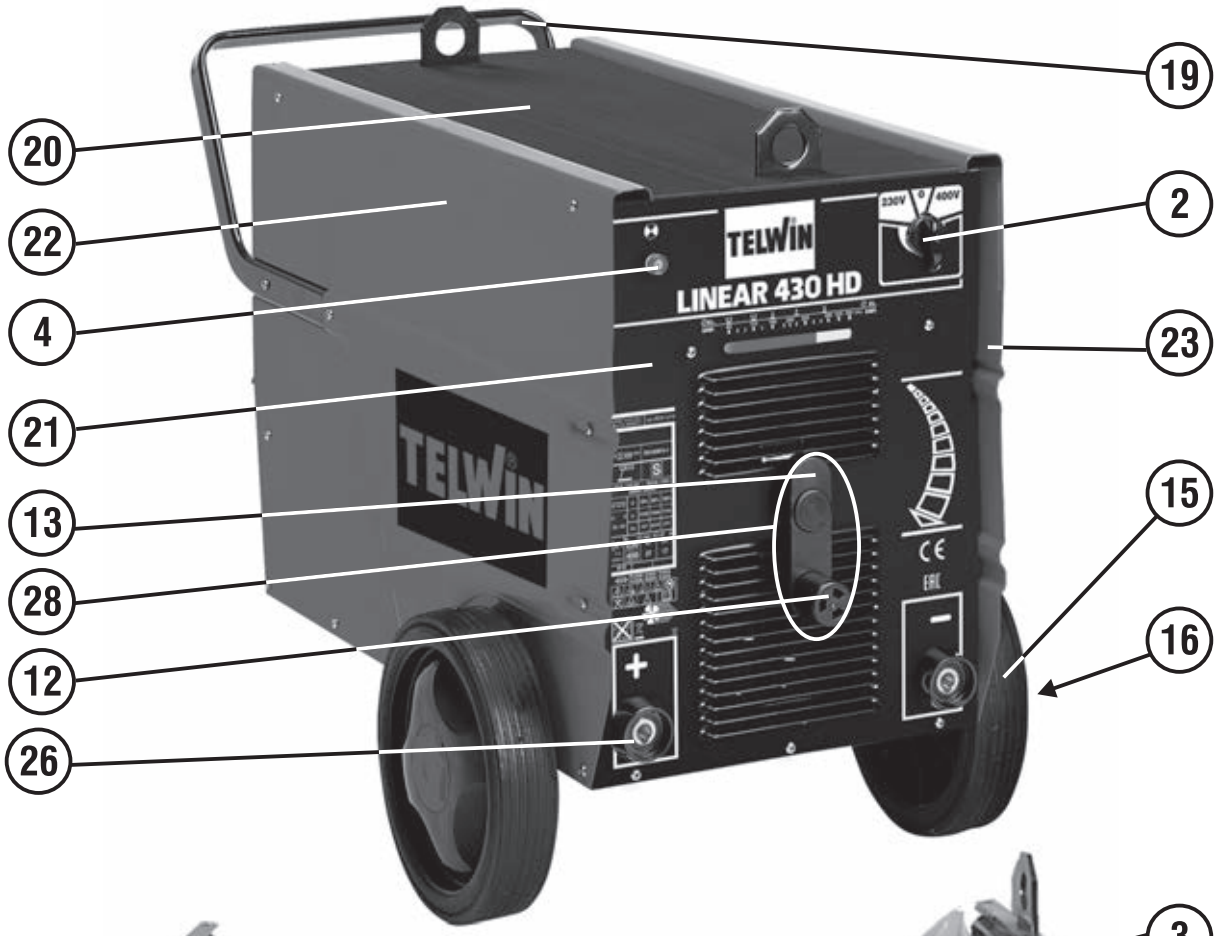

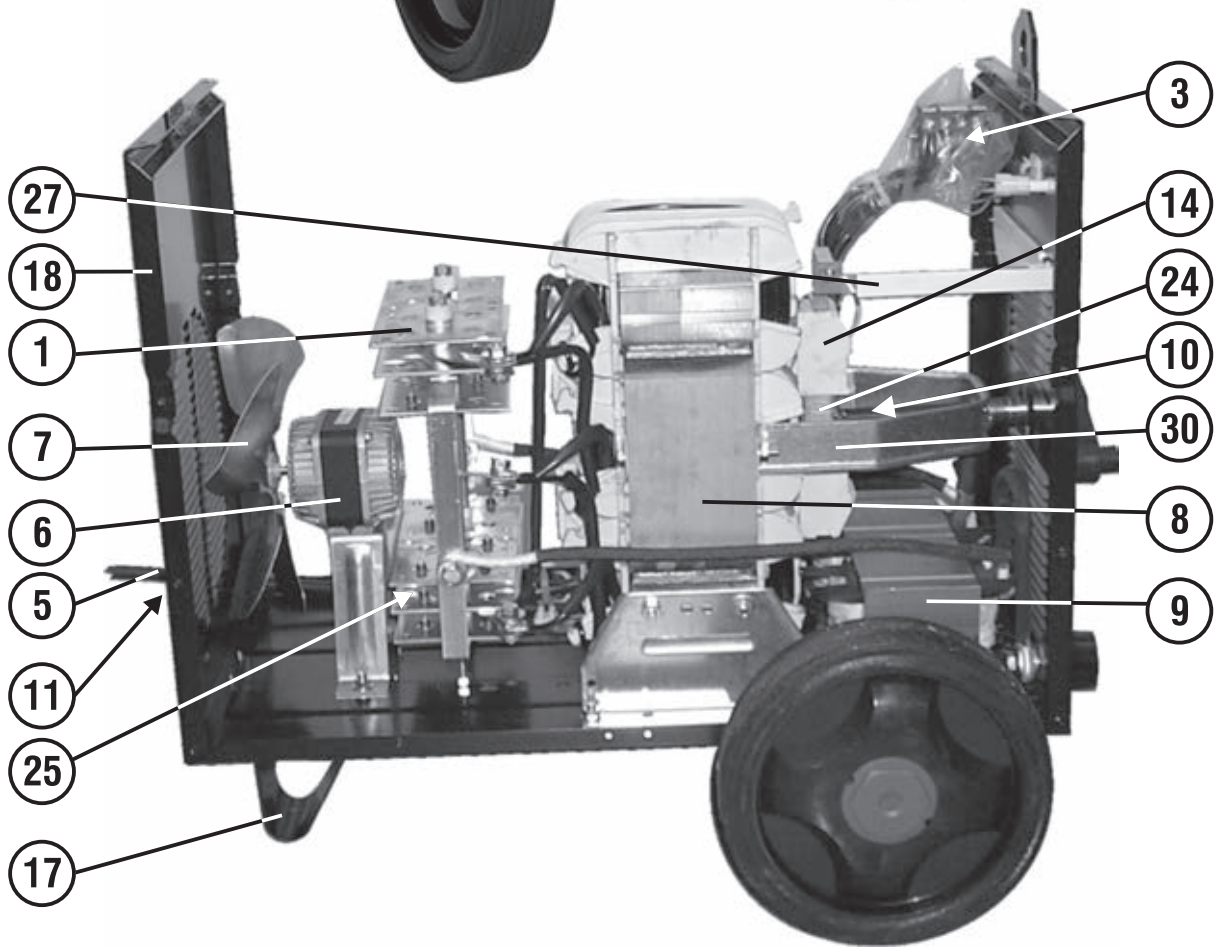

REF.	ELENCO PEZZI DI RICAMBIO PIECES DETACHEES SPARE PARTS LIST ERSATZTEILLISTE PIEZAS DE REPUESTO	CODICE CODE KODE
1	Raddrizzatore Redresseur Rectifier Gleichrichter Rectificador	112316
2	Assieme manopola per commutatore Set poigne pour commutateur Switch knob set Umschaltergriff set Set manjia para conmutador	323101
3	Commutatore Commutateur Switch Schalter Conmutador	122392
4	Lampada verde Temoin lumineux vert Green pilot lamp Gruene kontrollampe Piloto verde	122596
5	Cavo alim. 4g4 4.5 M Cable alim. 4g4 4.5 M Mains cable 4g4 4.5 M Netzkabel 4g4 4.5 M Cable alim. 4g4 4.5 M	132283
6	Motore Moteur Motor Motor Motor	152083
7	Ventola Helice Fan blade Fluegelrad Aventador	152113
8	Kit trasformatore Kit trasformateur Transformer kit Trafokit Kit transformador	981431
9	Reattanza Reactance Reactance Drossel Induccion	169378
10	Vite di regolazione Vis de reglage Regulation screw Regelungsschraube Tornillo de regulacion	242099
11	Pressacavo Presse cable Cable bushing Kabelhalter Prensa cable	312068
12	Impugnatura per volantino Poignee pour volant Knob for handwheel Griff fuer handrad Empunadura por volantito	312200

REF.	ELENCO PEZZI DI RICAMBIO PIECES DETACHEES SPARE PARTS LIST ERSATZTEILLISTE PIEZAS DE REPUESTO	CODICE CODE KODE
13	Volantino di regolazione Poignee de reglage Handwheel Regelungshandrad Volante de regulacion	312242
14	Shunt Shunt Shunt Shunt Shunt	313253
15	Ruota Roue Wheel Rad Rueda	321389
16	Asse per ruote Axes pour roue Wheels axle Raederachse Eje por rueda	422940
17	Piedino Embout Foot Fuss Pie	644408
18	Kit fondo Kit chassis Bottom kit Bodenteil kit Kit fondo	981429
19	Manico Poignee Handle Handgriff Manija	644465
20	Mantello Capot Cover Deckel Panel de cobertura	645330
21	Kit frontale Kit partie frontal Front panel kit Geraetefront kit Kit frontal	981729
22	Fianco destro Partie lateral droite Right side panel Rechte seite Flanco derecho	650595
23	Fianco sinistro Partie laterale gauche Left side Linke seite Flanco izquierdo	650596
24	Giogo Traverse shunt Joke Joch Juego	681171

REF.	ELENCO PEZZI DI RICAMBIO PIECES DETACHEES SPARE PARTS LIST ERSATZTEILLISTE PIEZAS DE REPUESTO	CODICE CODE KODE
25	Protezione raddrizzatore Protection redresseur Rectifier protection Gleichrichterschutz Protector rectificador	112182
26	Presa atlas 50mmq Prise atlas 50mmq Atlas socket 50mmq Atlas steckdose 50mmq Enchufe atlas 50mmq	712036
27	Bandierina indice Index de reglage Regulation indicator Regelungsfahne Banderilla de regulacion	312305
28	Kit volantino completo Kit poignee de reglage Handweelkit Regelungshandradkit Kit volanta de regulacion	990367
30	Cavallotto U bolt U bolt U bolt U bolt	482120

Schema elettrico, Schéma électrique, Diagram, Schaltplan, Esquema de conexiones.

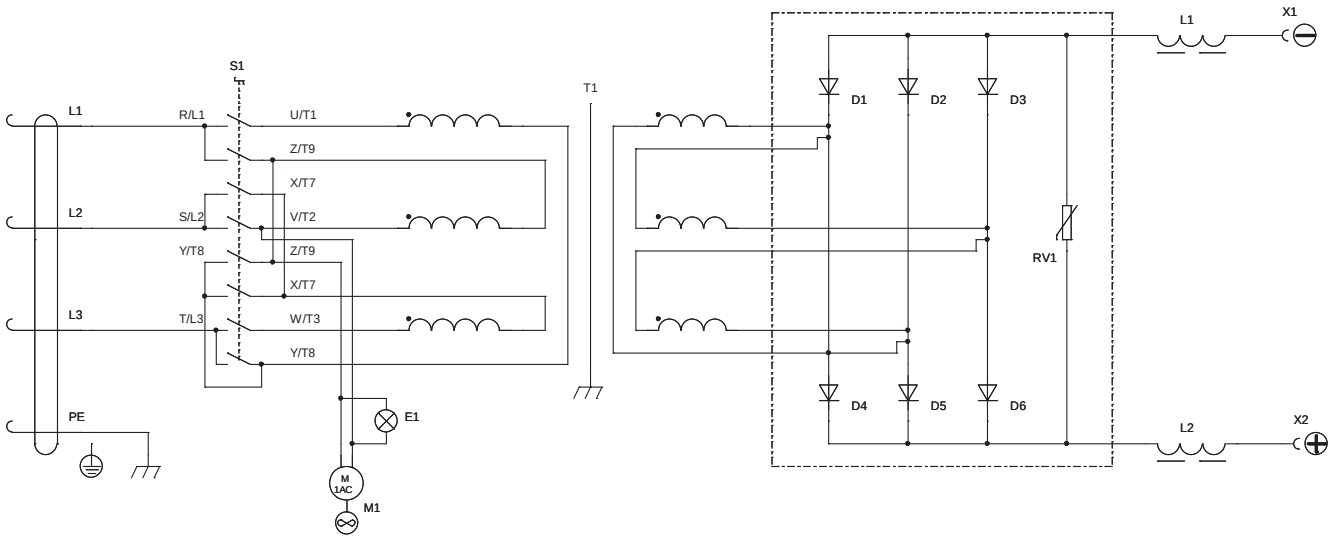

S1	R/L1		S/L2		Y/T8		T/L3	
POS.	U/T1	Z/T9	V/T2	X/T7	X/T7	Z/T9	Y/T8	W/T3
230V	X	X	X	X			X	X
0								
400V	X		X		X	X		X

ELENCO PEZZI DI RICAMBIO
LISTE PIECES DETACHEES
SPARE PARTS LIST
ERSATZTEILLISTE
PIEZAS DE REPUESTO

LINEAR 530HD

Esploso macchina, Dessin appareil, Machine drawing, Explosions Zeichnung des Geräts, Diseño seccionado maquina.



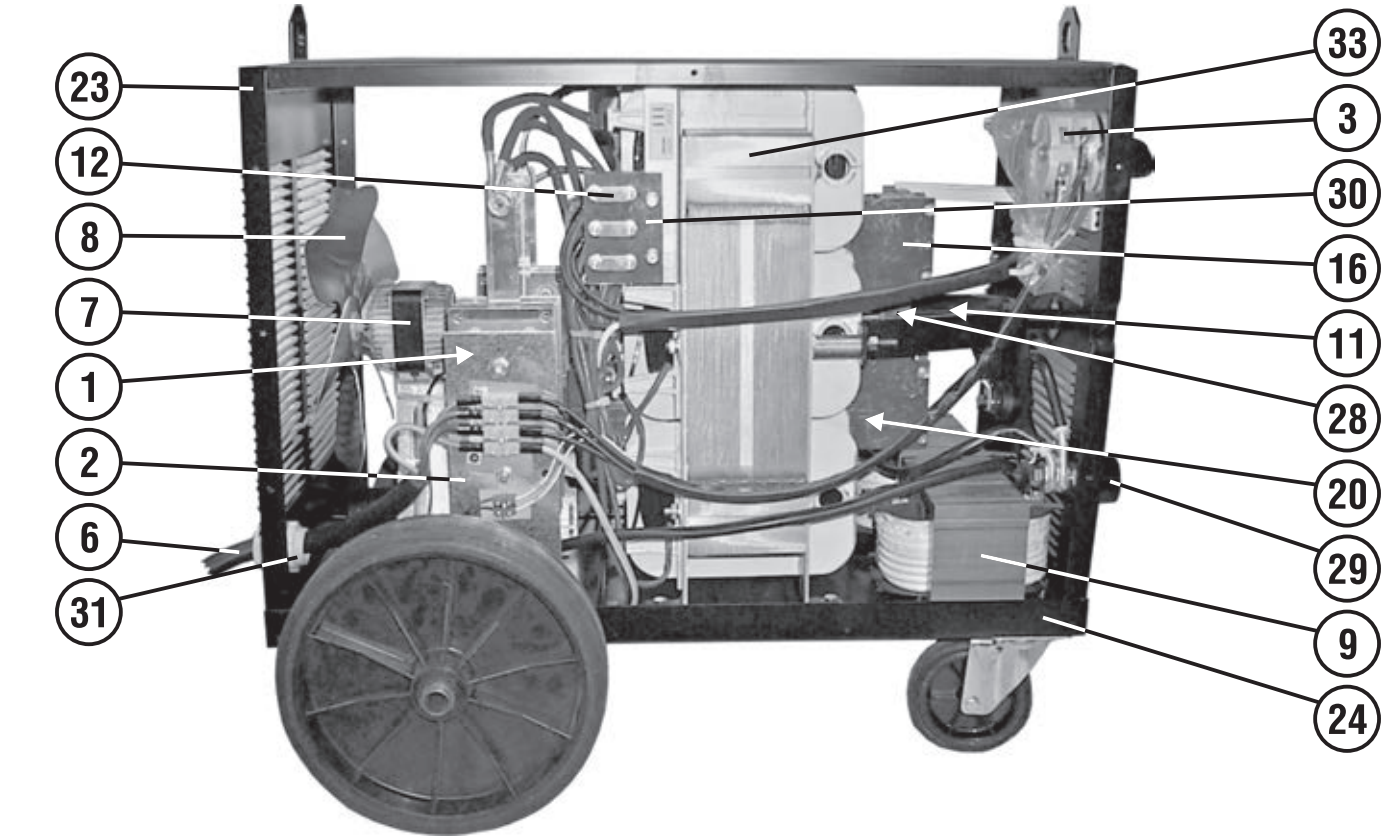

REF.	ELENCO PEZZI DI RICAMBIO PIECES DETACHEES SPARE PARTS LIST ERSATZTEILLISTE PIEZAS DE REPUESTO	CODICE CODE KODE
1	Protezione raddrizzatore Protection redresseur Rectifier protection Gleichrichterschutz Protector rectificador	112182
2	Raddrizzatore Redresseur Rectifier Gleichrichter Rectificador	112323
3	Kit commutatore + manopola Kit commutateur + poignee Switch + knob kit Schalter + knopf kit Kit conmutador + manjia	982008
5	Lampada verde Temoin lumineux vert Green pilot lamp Gruene kontrollampe Piloto verde	122596
6	Cavo alim. 4g10 4.5 M Cable alim. 4g10 4.5 M Mains cable 4g10 4.5 M Netzkabel 4g10 4.5 M Cable alim. 4g10 4.5 M	133107
7	Motore Moteur Motor Motor Motor	152083
8	Ventola Helice Fan blade Fluegelrad Aventador	152135
9	Reattanza Reactance Reactance Drossel Induccion	169326
10	Spina elastica Goupille Elastic plug Elastischer stecker Espina elastica	232040
11	Vite regolazione Vis de reglage Regulation screw Regelungschraube Tornillo de ajuste	242083
12	Ponticelli x basetta c.T. Barettes pour plaque a borne Base switch bridges Bruecke fuer klemmenbrett Ponte por tablero para el cambio	252057
13	Manico Poignee Handle Handgriff Manija	312004
14	Volantino Volant Handwheel Handrad Volante	312183
15	Bandierina indice Index de reglage Regulation indicator Regelungsfahne Banderilla de regulacion	312305
16	Shunt Shunt Shunt Shunt Shunt	314801
17	Ruota girevole Roue tournante Swivel wheel Bewegliches rad Rueda giratoria	321423
18	Ruota fissa Roue fixe Fixed wheel Fixes rad Rueda firme	322261
19	Asse ruote Axe roues Wheels axle Radachse Eje ruedas	422020
20	Molla Ressort Spring Feder Muelle	452112
21	Mantello Capot Cover Deckel Panel de cobertura	645363
22	Manico Poignee Handle Handgriff Manija	644493
23	Kit retro Kit partie arriere Back panel kit Rueckseite kit Kit trasera	980505
24	Fondo Chassis Bottom Bodenteil Fondo	644850
25	Kit frontale Kit partie frontal Front panel kit Geraetefront kit Kit frontal	980589
26	Fianco destro Partie lateral droite Right side panel Rechte seite Flanco derecho	650685
27	Fianco sinistro Partie laterale gauche Left side Linke seite Flanco izquierdo	650686
28	Giogo Traverse Joke Joch Juego	681012
29	Presa atlas 50mmq Prise atlas 50mmq Atlas socket 50mmq Atlas steckdose 50mmq Enchufe atlas 50mmq	712036
30	Kit basetta cambio tensione Kit plaque pour changer tension Changing voltage panel kit Wechselspannungsklemmbrett kit Kit tablero para el cambio tension	990215
31	Kit pressacavo Kit presse cable Cable bushing kit Kabeldurchgang kit Kit prensa cable	990368
33	Trasformatore Transformateur Transformer Transformator Transformador	169596

Schema elettrico, Schéma électrique, Diagram, Schaltplan, Esquema de conexiones.

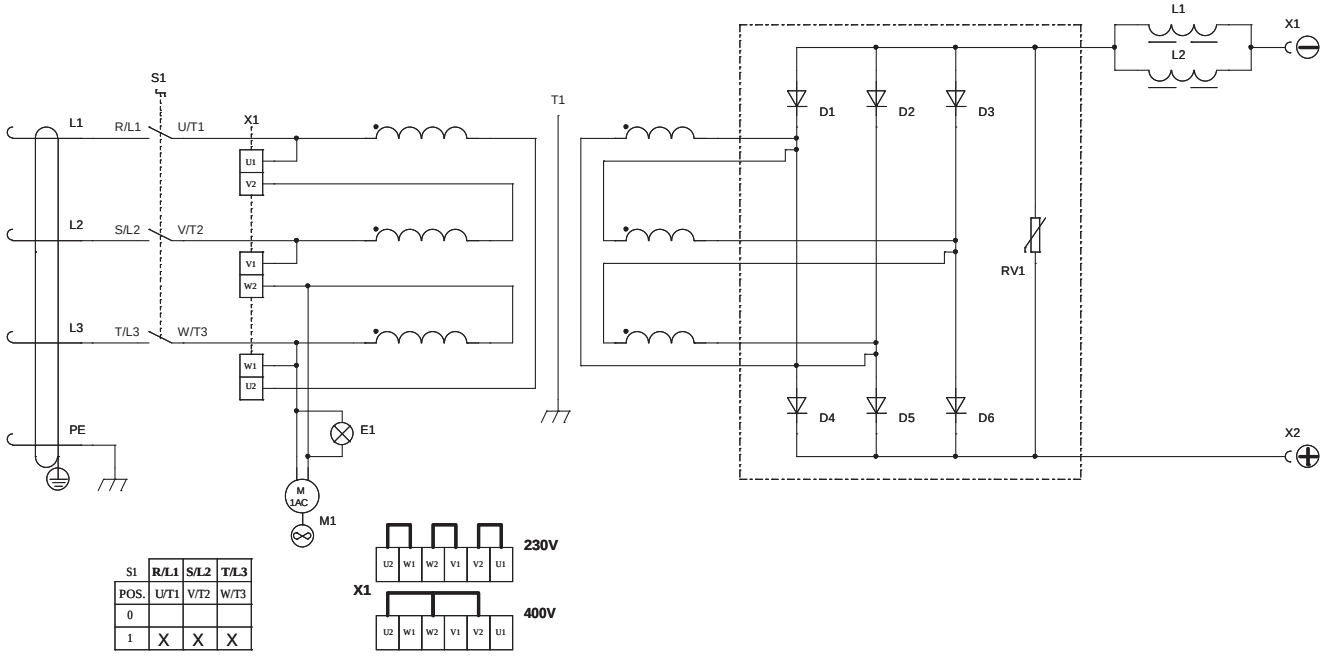

ELENCO PEZZI DI RICAMBIO
LISTE PIECES DETACHEES
SPARE PARTS LIST
ERSATZTEILLISTE
PIEZAS DE REPUESTO

LINEAR 630HD

Esploso macchina, Dessin appareil, Machine drawing, Explosions Zeichnung des Geräts, Diseño seccionado maquina.

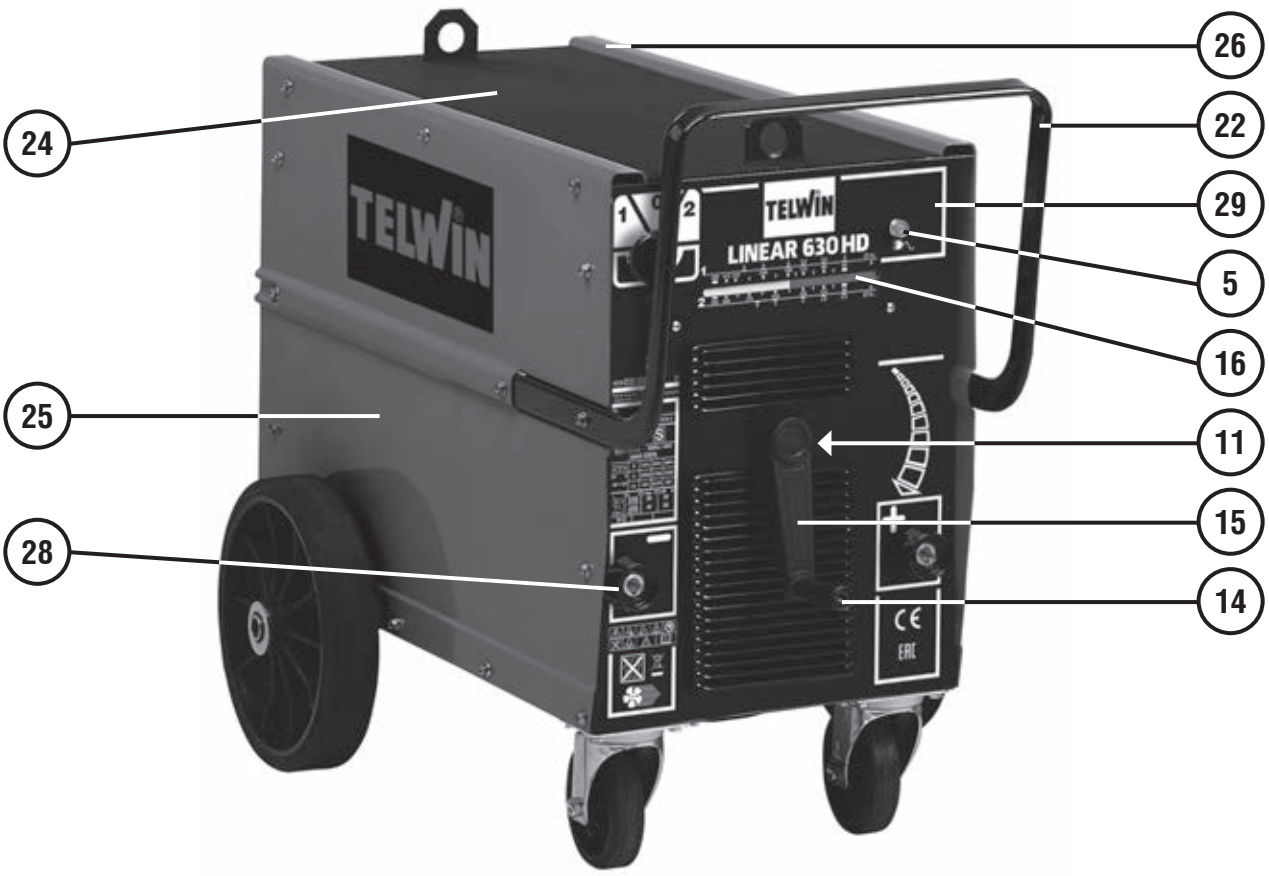

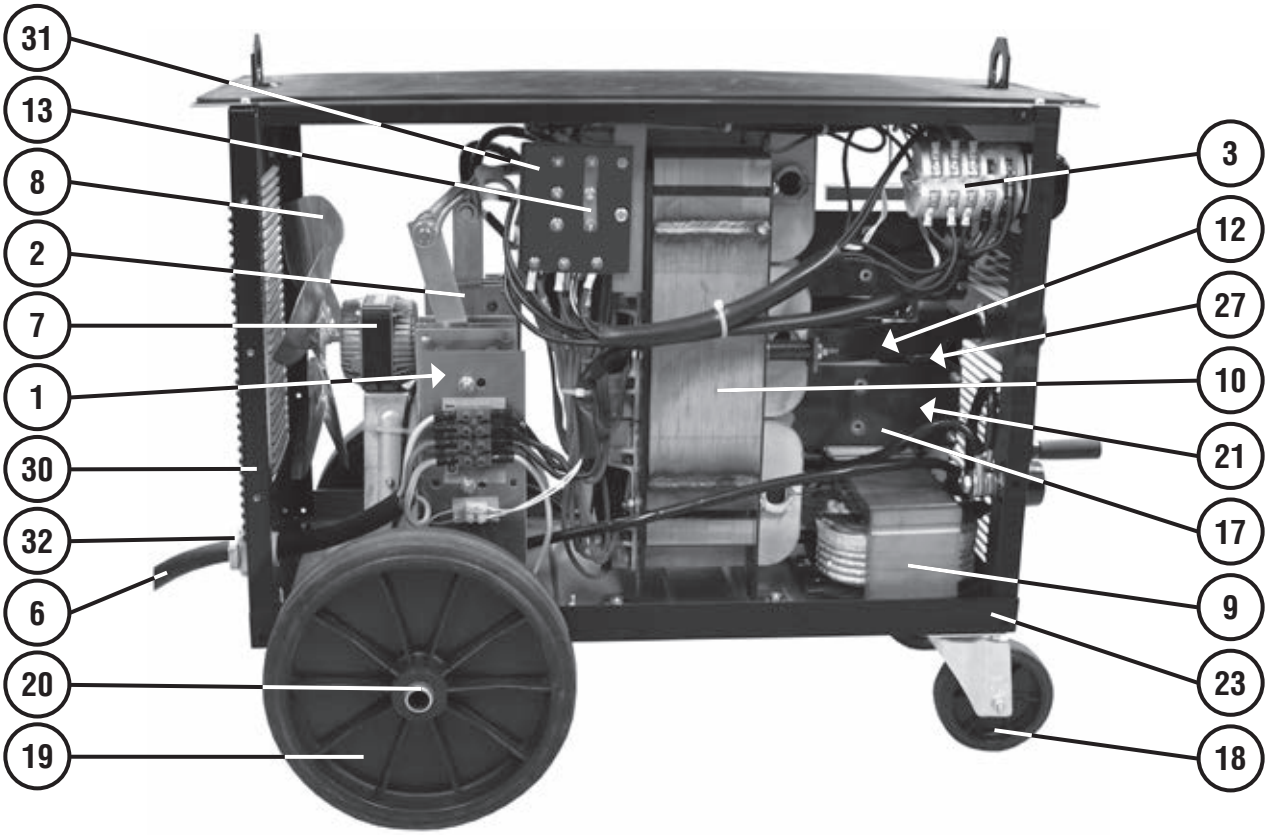

REF.	ELENCO PEZZI DI RICAMBIO PIECES DETACHEES SPARE PARTS LIST ERSATZTEILLISTE PIEZAS DE REPUESTO	CODICE CODE KODE
1	Protezione raddrizzatore Protection redresseur Rectifier protection Gleichrichterschutz Protector rectificador	112182
2	Raddrizzatore Redresseur Rectifier Gleichrichter Rectificador	112323
3	Kit commutatore + manopola Kit commutateur + poignee Switch + knob kit Schalter + knopf kit Kit conmutador + manjia	981964
5	Lampada verde Temoin lumineux vert Green pilot lamp Gruene kontrollampe Piloto verde	122596
6	Cavo alim. 4g10 4.5 M Cable alim. 4g10 4.5 M Mains cable 4g10 4.5 M Netzkabel 4g10 4.5 M Cable alim. 4g10 4.5 M	133107
7	Motore Moteur Motor Motor Motor	152083
8	Ventola Helice Fan blade Fluegelrad Aventador	152135
9	Reattanza Reactance Reactance Drossel Induccion	169326
10	Trasformatore Transformateur Transformer Transformator Transformador	169616
11	Spina elastica Goupille Elastic plug Elastischer stecker Espina elastica	232040
12	Vite regolazione Vis de reglage Regulation screw Regelungschraube Tornillo de ajuste	242083
13	Ponticelli x basetta c.T. Barettes pour plaque a borne Base switch bridges Bruecke fuer klemmenbrett Ponte por tablero para el cambio	252057
14	Manico Poignee Handle Handgriff Manija	312004
15	Volantino Volant Handwheel Handrad Volante	312183
16	Bandierina indice Index de reglage Regulation indicator Regelungsfahne Banderilla de regulacion	312305
17	Shunt Shunt Shunt Shunt Shunt	314801
18	Ruota girevole Roue tournante Swivel wheel Bewegliches rad Rueda giratoria	321423
19	Ruota fissa Roue fixe Fixed wheel Fixes rad Rueda firme	322261
20	Asse ruote Axe roues Wheels axle Radachse Eje ruedas	422020
21	Molla Ressort Spring Feder Muelle	452112
22	Manico Poignee Handle Handgriff Manija	644493
23	Fondo Chassis Bottom Bodenteil Fondo	644850
24	Mantello Capot Cover Deckel Panel de cobertura	645363
25	Fianco destro Partie lateral droite Right side panel Rechte seite Flanco derecho	650685
26	Fianco sinistro Partie laterale gauche Left side Linke seite Flanco izquierdo	650686
27	Giogo Traverse Joke Joch Juego	681012
28	Presa atlas 70/95mmq Prise atlas 70/95mmq Atlas socket 70/95mmq Atlas steckdose 70/95mmq Enchufe atlas 70/95mmq	712037
29	Kit frontale Kit partie frontal Front panel kit Geraetefront kit Kit frontal	980964
30	Kit retro Kit partie arriere Back panel kit Rueckseite kit Kit trasera	980505
31	Kit basetta cambio tensione Kit plaque pour changer tension Changing voltage panel kit Wechselspannungsklemmbrett kit Kit tablero para el cambio tension	980597
32	Kit pressacavo Kit presse cable Cable bushing kit Kabeldurchgang kit Kit prensa cable	990368

Schema elettrico, Schéma électrique, Diagram, Schaltplan, Esquema de conexiones.

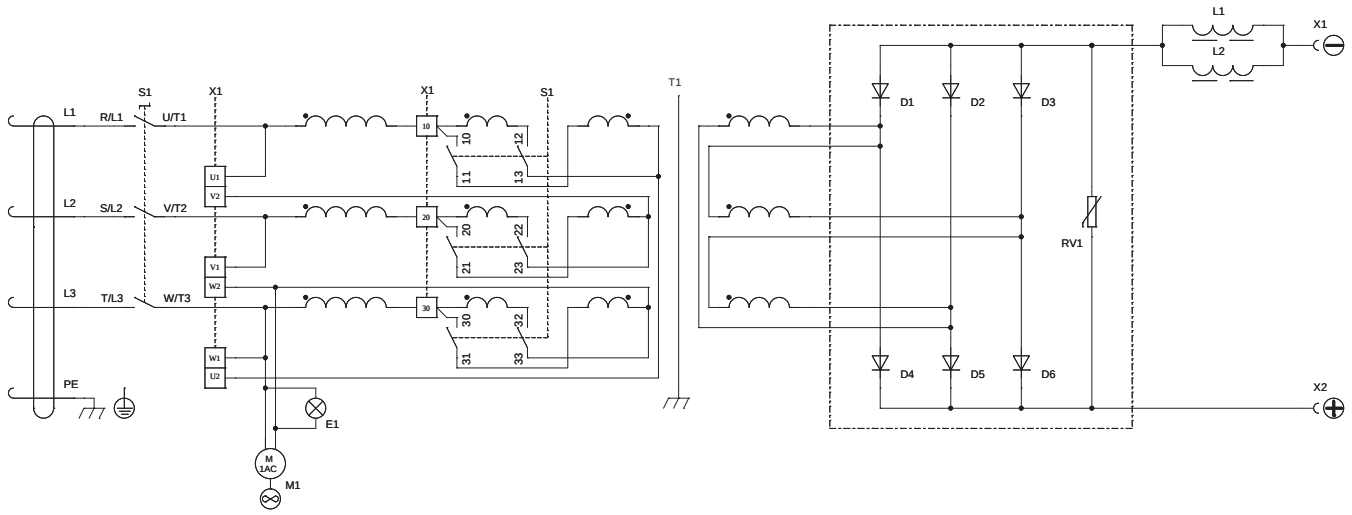

S1	R/L1	S/L2	T/L3	10	12	20	22	30	32
POS.	U/T1	V/T2	W/T3	11	13	21	23	31	33
1	X	X	X		X		X		X
0									
2	X	X	X	X		X		X	

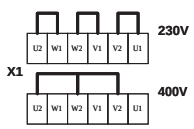

ELENCO PEZZI DI RICAMBIO
LISTE PIECES DETACHEES
SPARE PARTS LIST
ERSATZTEILLISTE
PIEZAS DE REPUESTO

BIMAX 162 TURBO

TELWIN®

Esploso macchina, Dessin appareil, Machine drawing, Explosions Zeichnung des Geräts, Diseño seccionado maquina.

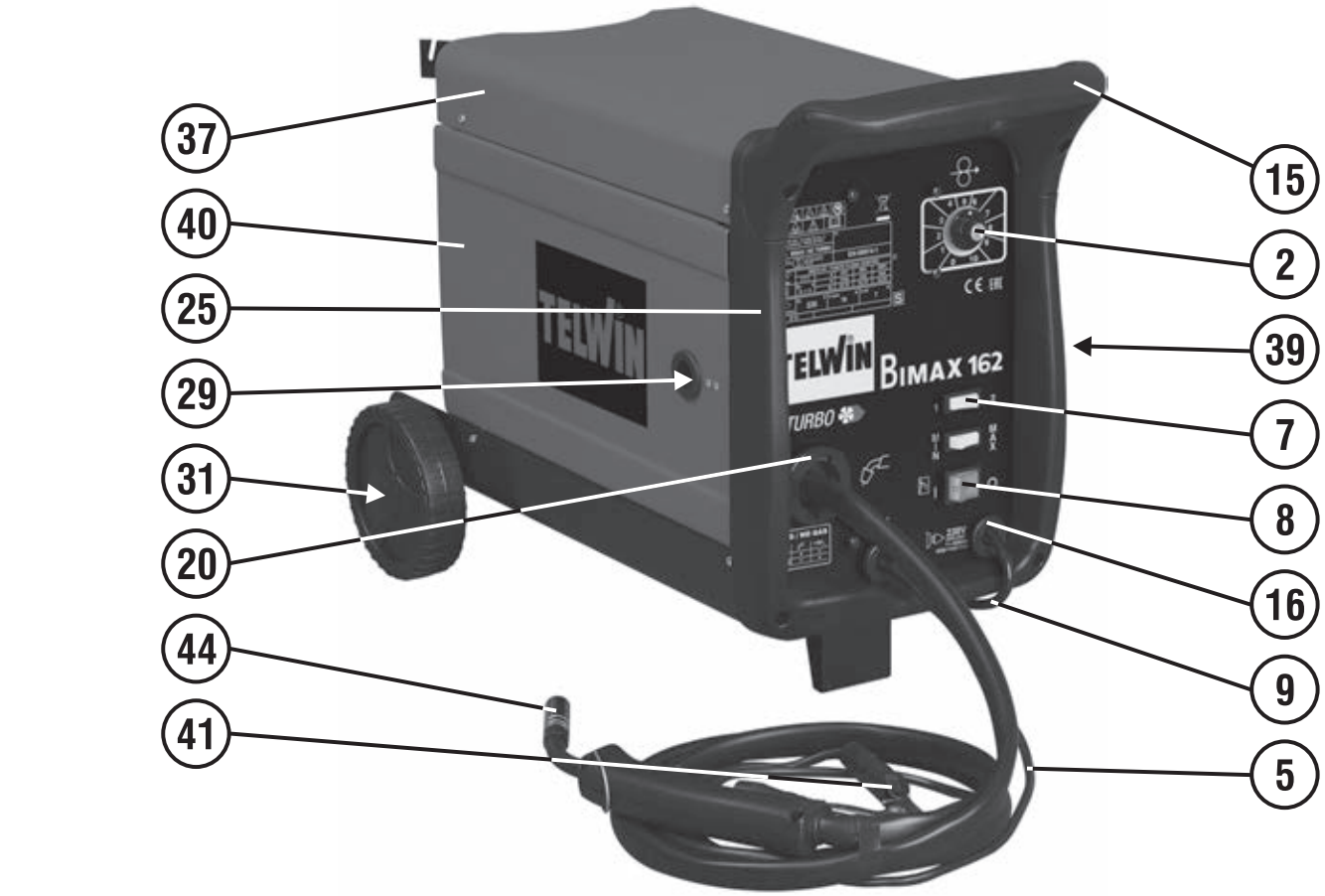

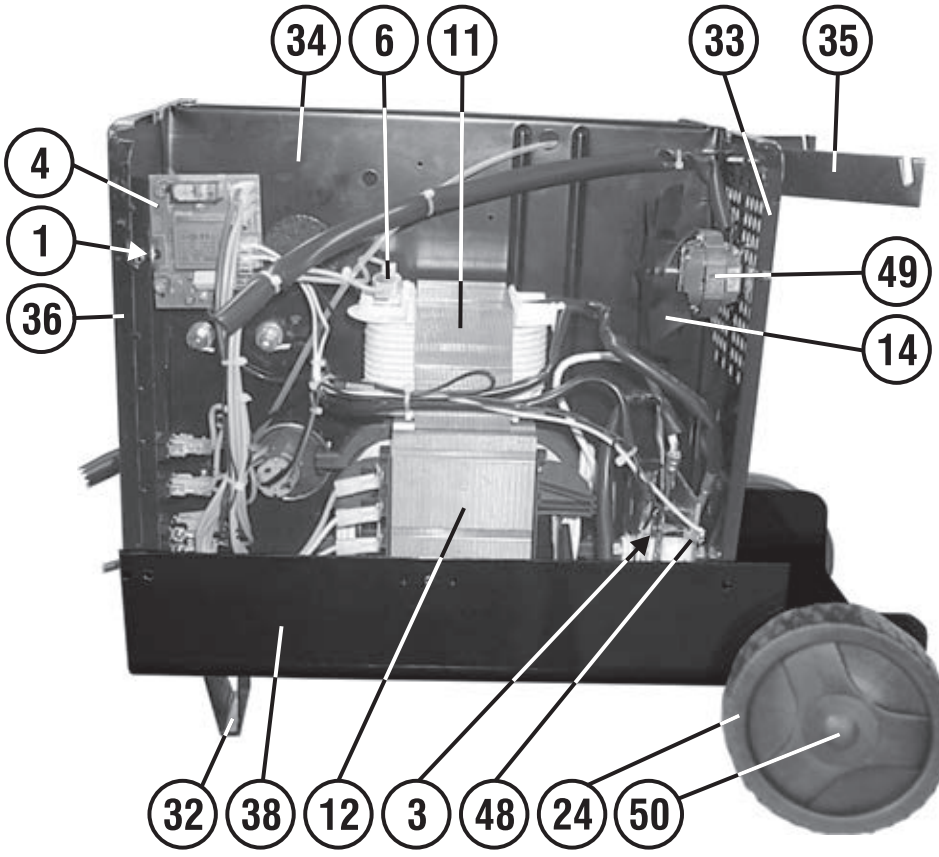

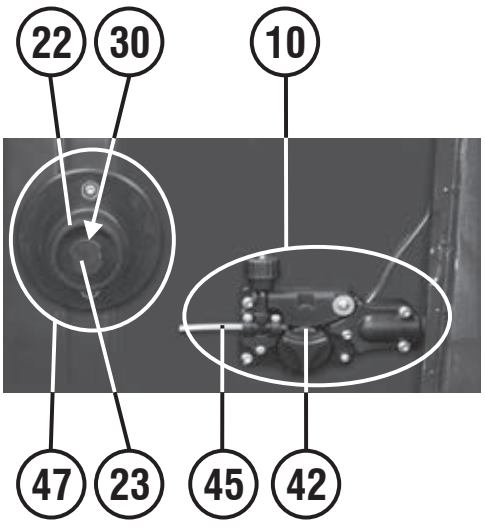

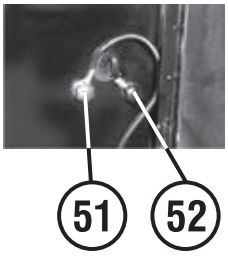

REF.	ELENCO PEZZI DI RICAMBIO PIECES DETACHEES SPARE PARTS LIST ERSATZTEILLISTE PIEZAS DE REPUESTO	CODICE CODE KODE
1	Potenziometro Potentiometre Potentiometer Potentiometer Potenciometro	116411
2	Manopola Poignee Knob Griff Manija	121424
3	Protezione raddrizzatore Protection redresseur Rectifier protection Gleichrichterschutz Protector rectificador	112185
4	Kit scheda traino Kit fiche devidoir Wire feeder board kit Drahtvorschubkarte kit Kit tarjeta alimentador de hilo	980463
5	Cavo 16 mmq 1,8 m Cable 16 mmq 1,8 m Cable 16 mmq 1,8 m Kabel 16 mmq 1,8 m Cable 16 mmq 1,8 m	124502
6	Termostato Thermostat Thermostat Thermostat Termostato	121714
7	Deviatore Gareur Switch Schalter Interruptor	122400
8	Interruttore Interrupteur Switch Schalter Interruptor	122752
9	Cavo alim. 3g1.5 2m spina schuko Cable alim. 3g1.5 2m fiche schuko Mains cable 3g1.5 2m schuko plug Netzkabel 3g1.5 2m schuko stecker Cable alim. 3g1.5 2m espina schuko	132310
10	Kit motore Kit moteur Motor kit Motorkit Kit motor	981828
11	Reattanza Reactance Reactance Drossel Induccion	169228
12	Trasformatore Transformateur Transformer Transformator Transformador	169295
14	Ventola Helice Fan blade Flügelrad Aventador	312025
15	Manico Poignee Handle Handgriff Manija	312356
16	Pressacavo Presse cable Cable bushing Kabelhalter Prensa cable	322112
20	Ghiera Embout Ring nut Nutmutter Virola	322143
22	Ghiera per aspo Embout pour support bobine Reel ring nut Wicklernutmutter Virola por aspa	322173
23	Volantino per aspo Volant pour support bobine Reel handwheel Wicklerhandrad Volant por aspa	322174
24	Ruota Roue Wheel Rad Rueda	322193
25	Cornice Cadre Frame Rahmen Marco	322631
29	Molla sportello Ressort pour guichet Door spring Tuerfeder Muelle por portezuela	452056

REF.	ELENCO PEZZI DI RICAMBIO PIECES DETACHEES SPARE PARTS LIST ERSATZTEILLISTE PIEZAS DE REPUESTO	CODICE CODE KODE
30	Molla per aspo Ressort pour support bobine Reel spring Wickler feder Muelle por aspa	452065
31	Asse per ruote Axe roues Wheels axle Radachse Eje ruedas	482783
32	Piedino Embout Foot Fuss Pie	644402
33	Retro Partie arriere Back panel Ruecksеite Trasera	644939
34	Diaframma Diaphragme Diaphragm Diaphragma Diafragma	644940
35	Supporto bombola Support bouteille Bottle holder Flaschenhalter Sosten bombona	645088
36	Frontale Partie frontal Front panel Geraetefront Frontal	649485
37	Mantello Capot Cover Deckel Panel de cobertura	651026
38	Fondo Chassis Bottom Bodenteil Fondo	644965
39	Fianco Partie lateral Side panel Seitenblech Flanco	655280
40	Sportello Guichet Door Tuer Portezuela	655281
41	Colorado 150b pinza di massa 150a Colorado 150b pince de masse 150a Colorado 150b work clamp 150a Colorado 150b masseklemme 150a Colorado 150b pinza de masa 150a	712001
42	Rullino traino 1r 0,6fe-0,8/0,9fl "c" Galet 1r 0,6fe-0,8/0,9fl "c" Feed roll 1r 0,6fe-0,8/0,9fl "c" Vorschubrolle 1r 0,6fe-0,8/0,9fl "c" Roldana 1r 0,6fe-0,8/0,9fl "c"	722529
44	Tw160 torcia mig 2m Tw160 torche mig 2m Tw160 mig torch 2m Tw160 mig brenner 2m Tw160 antorcha mig 2m	742402
45	Kit guaina entrata motore Kit gaine entree moteur Gas hose kit Drahtfuehrungsseelekit Kit vaina guiadera alambre	990097
47	Kit aspo Kit support bobine Reel kit Wickler kit Kit aspa	990288
48	Kit raddrizzatore Kit redresseur Rectifier kit Kit gleichrichter Kit rectificador	990745
49	Motore ventilatore Moteur ventilateur Fan motor Ventilatormotor Motor ventilacion	152080
50	Tappo blocca ruota Bouchon ferme roue Wheel locking ring Radsperrestopfen Tapon de bloqueo rueda	322223
51	Kit morsetto di carica rosso Kit borne de charge rouge Red charging clamp kit Rote anschlussklemme kit Kit borne de carga rojo	990072
52	Kit morsetto di carica nero Kit borne de charge noire Kit black charging clamp Kit schwarze ladungsklemme Kit borne de carga negro	990073

REF.	ELENCO PEZZI DI RICAMBIO PIECES DETACHEES SPARE PARTS LIST ERSATZTEILLISTE PIEZAS DE REPUESTO	CODICE CODE KODE

Schema elettrico, Schéma électrique, Diagram, Schaltplan, Esquema de conexiones.

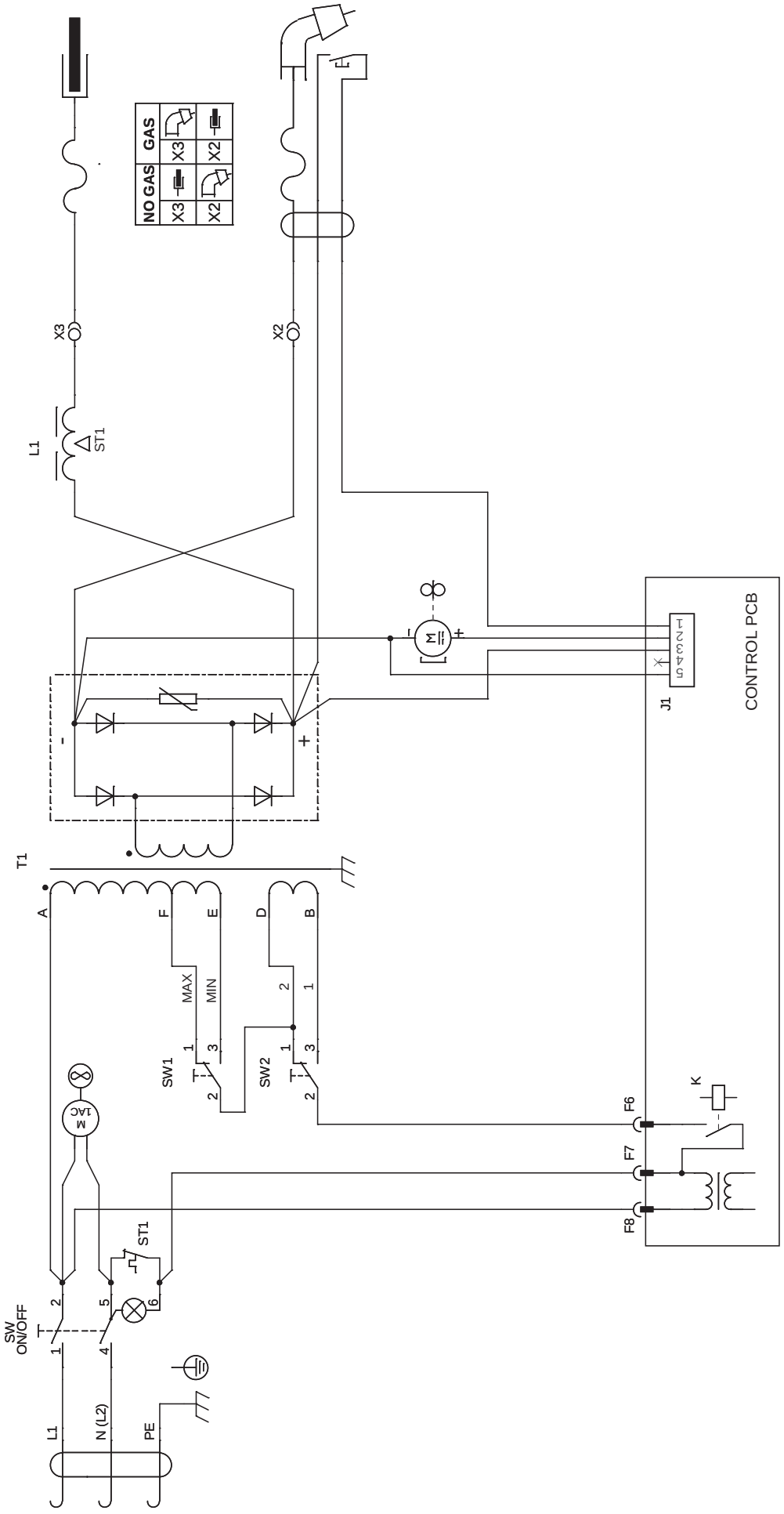

Esploso torcia, Dessin torche, Torch drawing, Schlauchpaket - Explosionszeichnung, Diseño seccionado antorcha.

742402

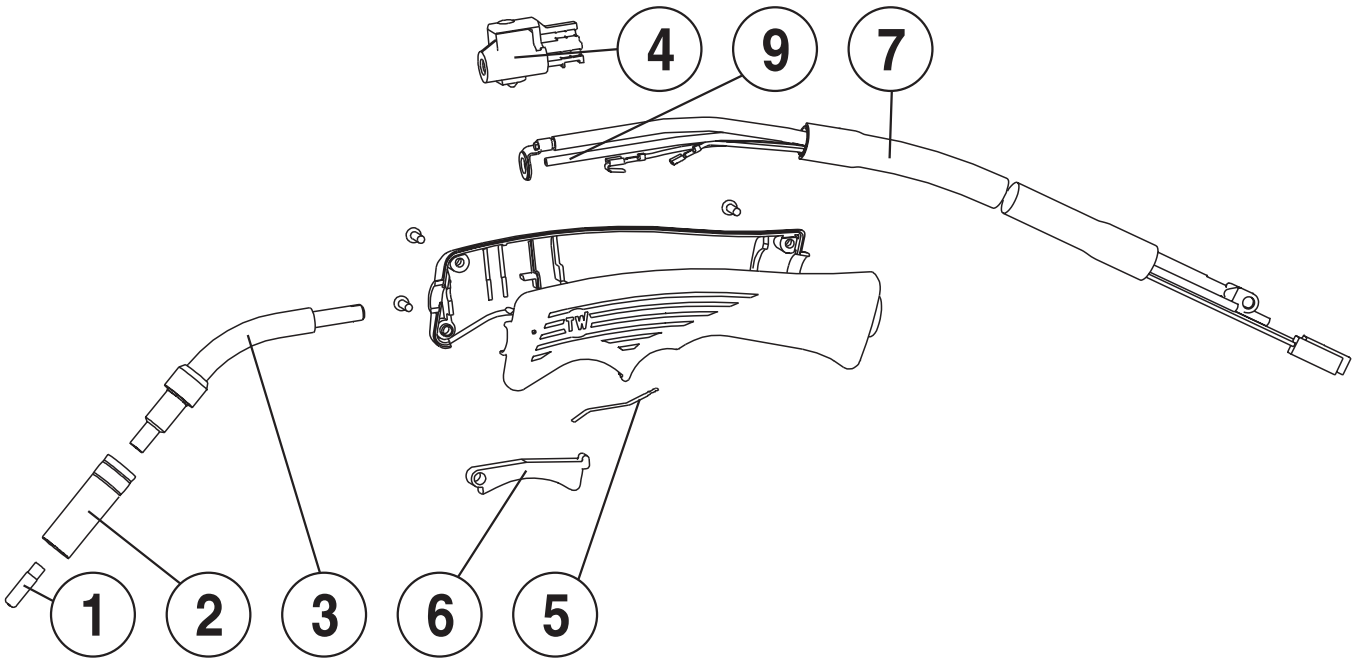

REF.	ELENCO PEZZI RICAMBIO TORCIA LISTE PIECES DETACHEES TORCHE SPARE PARTS LIST TORCH ERSATZTEILLISTE SCLAUCHPAKET PIEZAS DE REPUESTO ANTORCHA	CODICE CODE KODE
1	Tubetto di contatto d. 1 Mm al/flux m6 Tube contact d. 1 Mm al/flux m6 Contact tip d. 1 Mm al/flux m6 Kontaktdüse d. 1 Mm al/flux m6 Tubito de contacto d. 1 Mm al/flux m6	722552
2	Ugello cilindrico tw160–180,mt15,sp.Gun Bec conique tw160–180,mt15,sp.Gun Cylindrical nozzle tw160–180,mt15,sp.Gun Zylindrische düse tw160–180,mt15,sp.Gun Inyect. Cilindrico tw160–180,mt15,sp.Gun	722149
3	Lancia con diffusore tw 160 - 180 Lance avec diffuseur tw 160 - 180 Swan neck with diffuser tw 160 - 180 Brennerhals mit diffusor tw 160 - 180 Encorvado con diffusor tw 160 - 180	722078
4	Valvola Vanne Valve Ventil Valvula	990464
5	Molla per contatto torcia mig Ressort de contacte torche mig Contact spring for mig torch Kontaktfeder fuer mig brenner Muelle de contacto para antorcha mig	452097
6	Pulsante Poussoir Pushbutton Druckknopf Pulsador	322295
7	Kit fascio cavi 10mmq Kit faisceau cables 10mmq Kit cable set 10 mmq Kit kabelnset 10mmq Kit fajo cables 10mmq	990602
9	Guaina d.0,6-0,8mm 2m fe/inox/flux Gaine d.0,6-0,8 Mm 2m fe/inox/flux Guide hose d.0,6-0,8mm 2m fe/inox/flux Drahtführung d.0,6-0,8mm 2m fe/inox/flux Vaina d. 0,6-0,8mm 2m fe/inox/flux	722077

REF.	ELENCO PEZZI RICAMBIO TORCIA LISTE PIECES DETACHEES TORCHE SPARE PARTS LIST TORCH ERSATZTEILLISTE SCLAUCHPAKET PIEZAS DE REPUESTO ANTORCHA	CODICE CODE KODE

REF.	ELENCO PEZZI RICAMBIO TORCIA LISTE PIECES DETACHEES TORCHE SPARE PARTS LIST TORCH ERSATZTEILLISTE SCLAUCHPAKET PIEZAS DE REPUESTO ANTORCHA	CODICE CODE KODE

ELENCO PEZZI DI RICAMBIO
LISTE PIECES DETACHEES
SPARE PARTS LIST
ERSATZTEILLISTE
PIEZAS DE REPUESTO

TELMIG 180/2 TURBO

Esploso macchina, Dessin appareil, Machine drawing, Explosions Zeichnung des Geräts, Diseño seccionado maquina.

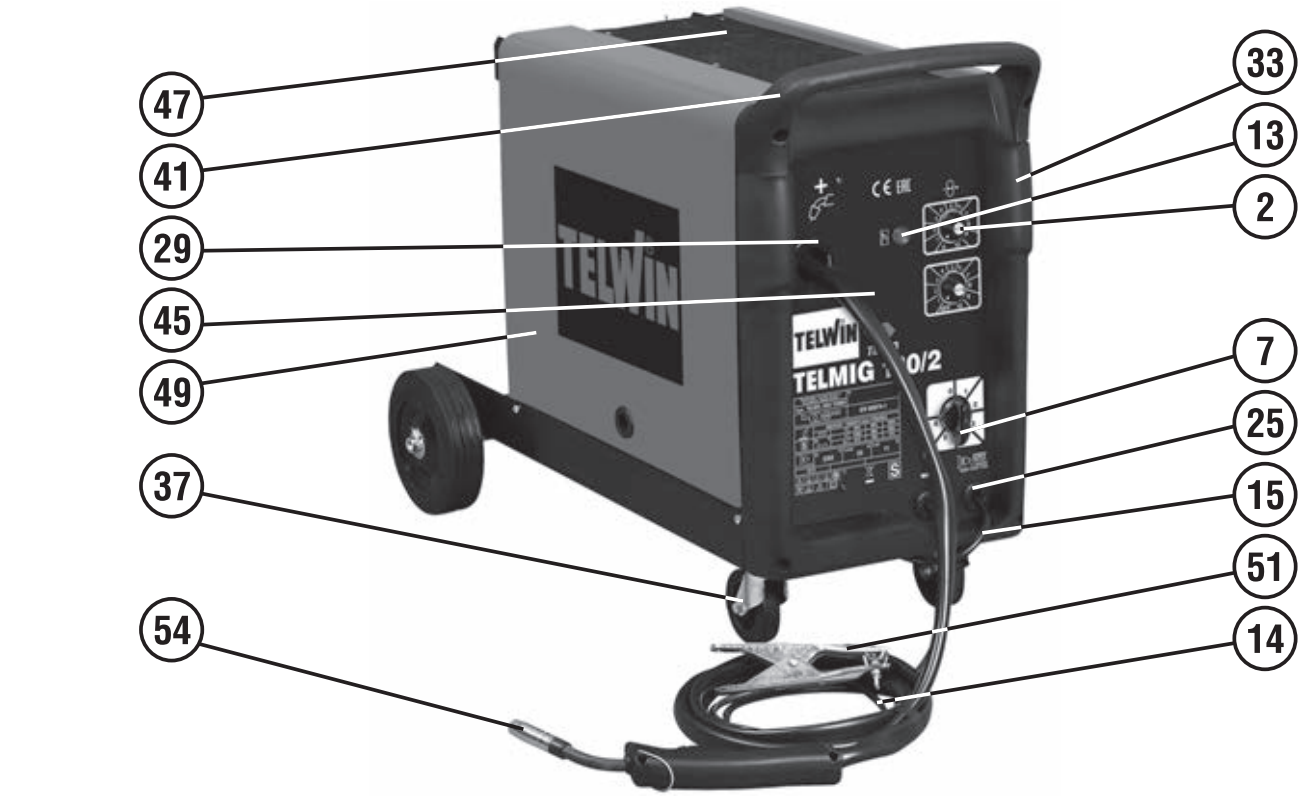

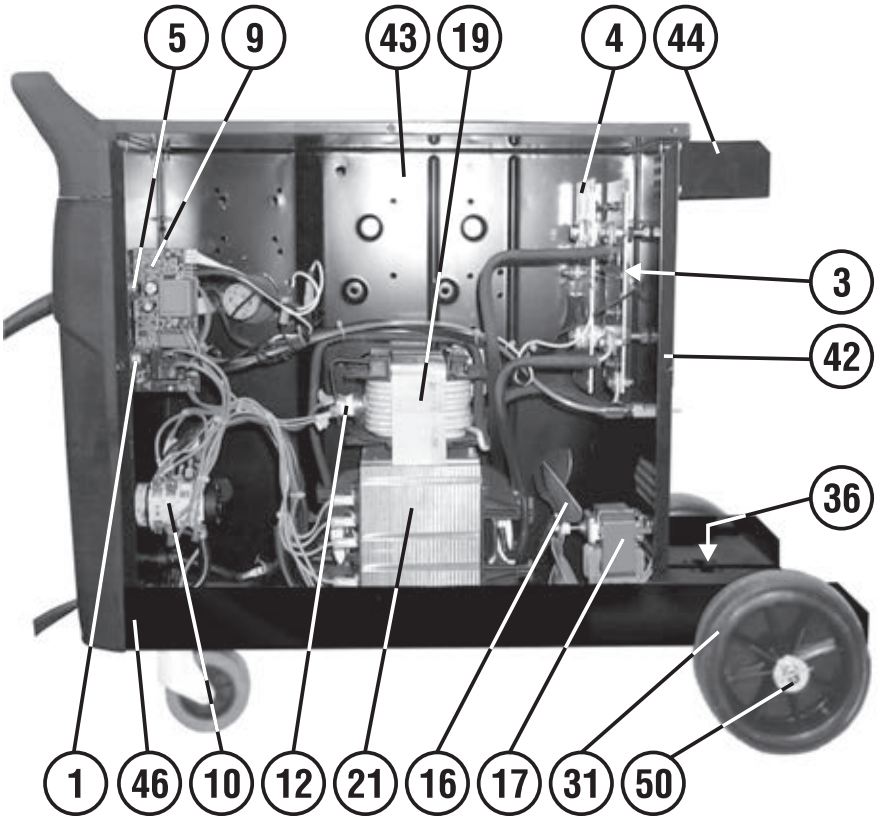

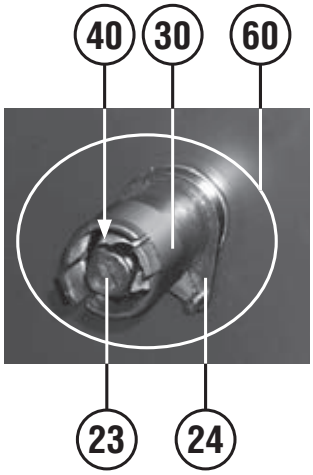

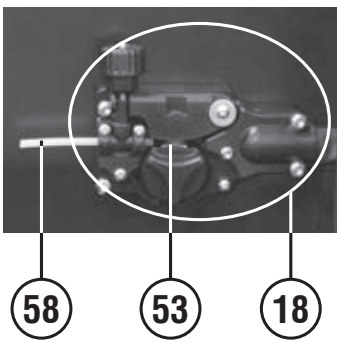

REF.	ELENCO PEZZI DI RICAMBIO PIECES DETACHEES SPARE PARTS LIST ERSATZTEILLISTE PIEZAS DE REPUESTO	CODICE CODE KODE
1	Potenziometro Potentiometre Potentiometer Potentiometer Potenciometro	113574
2	Manopola Poignee Knob Griff Manija	121424
3	Protezione raddrizzatore Protection redresseur Rectifier protection Gleichrichterschutz Proteccion rectificador	112183
4	Kit radrizzatore Kit redresseur Rectifier kit Gleichrichter kit Kit rectificador	980476
5	Potenziometro Potentiometre Potentiometer Potentiometer Potenciometro	113533
7	Assieme manopola per commutatore Set poigne pour commutateur Switch knob set Umschaltergriff set Set manjia para conmutador	323101
9	Kit scheda traino Kit fiche devidoir Wire feeder board kit Drahtvorschubkarte kit Kit tarjeta alimentador de hilo	980461
10	Commutatore Commutateur Switch Schalter Conmutador	121510
12	Termostato Thermostat Thermostat Thermostat Termostato	121715
13	Lampada gialla Temoin lumineaux jaune Yellow light Gelbe kontrollampe Piloto amarillo	122707
14	Cavo 16 mmq 1,8 m Cable 16 mmq 1,8 m Cable 16 mmq 1,8 m Kabel 16 mmq 1,8 m Cable 16 mmq 1,8 m	120302
15	Cavo alim. 3g1.5 2 M Cable alim. 3g1.5 2 M Mains cable 3g1.5 2 M Netzkabel 3g1.5 2 M Cable alim. 3g1.5 2 M	132306
16	Ventola Helice Fan blade Fluegelrad Aventador	152054
17	Motore ventilatore Moteur ventilateur Fan motor Ventilatormotor Motor ventilacion	152110
18	Kit motore Kit moteur Motor kit Motorkit Kit motor	981831
19	Reattanza Reactance Reactance Drossel Induccion	169371
21	Kit trasformatore Kit transformateur Transformer kit Transformator kit Kit transformador	990814
23	Volantino per aspo Volant pour support bobine Reel handwheel Wicklerhandrad Volant por aspa	312137
24	Aspo Support bobine Reel Wickler Aspa	322081
25	Pressacavo Presse cable Cable bushing Kabelhalter Prensa cable	322112
29	Ghiera Embout Ring nut Nutmutter Virola	322143

REF.	ELENCO PEZZI DI RICAMBIO PIECES DETACHEES SPARE PARTS LIST ERSATZTEILLISTE PIEZAS DE REPUESTO	CODICE CODE KODE
30	Distanziale Entretoise Spacer Abstandstueck Anillo por distanciar	322180
31	Ruota fissa Roue fixe Fixed wheel Fixes rad Rueda firme	322201
33	Cornice Cadre Frame Rahmen Marco	322640
36	Cavallotto Etrier Support Bügelbolzen Sosten	422817
37	Kit ruote girevoli Kit roues tournantes Kit swivel wheels Kit drehbarerraeder Kit ruedas giratorias	143136
38	Adattatore bombola argon it Adaptateur bouteille argon it Argon gas bottle it adaptor Argongasflasche it passtück Adaptador bombona argon it	432036
40	Molla per aspo Ressort pour support bobine Reel spring Wicklerfeder Muelle por aspa	452057
41	Manico Poignee Handle Handgriff Manija	312328
42	Retro Partie arriere Back panel Rueckseite Trasera	644828
43	Diaframma Diaphragme Diaphragm Diaphragma Diafragma	644176
44	Staffa per bombola Etrier pour bouteille Bracket for bottle Buegel fuer flasche Estribo para bombona	644606
45	Frontale Partie frontal Front panel Geraetefront Frontal	649557
46	Fondo Chassis Bottom Bodenteil Fondo	644961
47	Kit mantello Kit capot Cover kit Deckelkit Kit panel de cobertura	980840
49	Kit sportello Kit guichet Door kit Tuer kit Kit portezuela	980884
50	Asse per ruote Axe roues Wheels axle Radachse Eje ruedas	681092
51	Toledo 250 pinza di massa 250a Toledo 250 pince de masse 250a Toledo 250 work clamp 250a Toledo 250 masseklemme 250a Toledo 250 pinza de masa 250a	712030
53	Rullino traino 1r 0,6fe-0,8/0,9fe "c" Galet1r 0,6fe-0,8/0,9fe "c" Feed roll 1r 0,6fe-0,8/0,9fe "c" Vorschubrolle 1r 0,6fe-0,8/0,9fe "c" Roldana 1r 0,6fe-0,8/0,9fe "c"	722019
54	Tw180 torcia mig 2.5m Tw180 torche mig 2.5m Tw180 mig torch 2.5m Tw180 mig brenner 2.5m Tw180 antorcha mig 2.5m	742405
55	Riduttore pressione bombola ricar. Reducteur pression bouteille recharg. Gas regulator refillable bottle Druckminderer f. Auffüllbare flasche Reductor presion bombona recargar	722341
58	Kit guaina entrata motore Kit gaine entree moteur Gas hose kit Drahtfuehrungsseelekit Kit vaina guiadera alambre	990097

REF.	ELENCO PEZZI DI RICAMBIO PIECES DETACHEES SPARE PARTS LIST ERSATZTEILLISTE PIEZAS DE REPUESTO	CODICE CODE KODE
60	Kit aspo Kit support bobine Reel kit Wickler kit Kit aspa	990264

Schema elettrico, Schéma électrique, Diagram, Schaltplan, Esquema de conexiones.

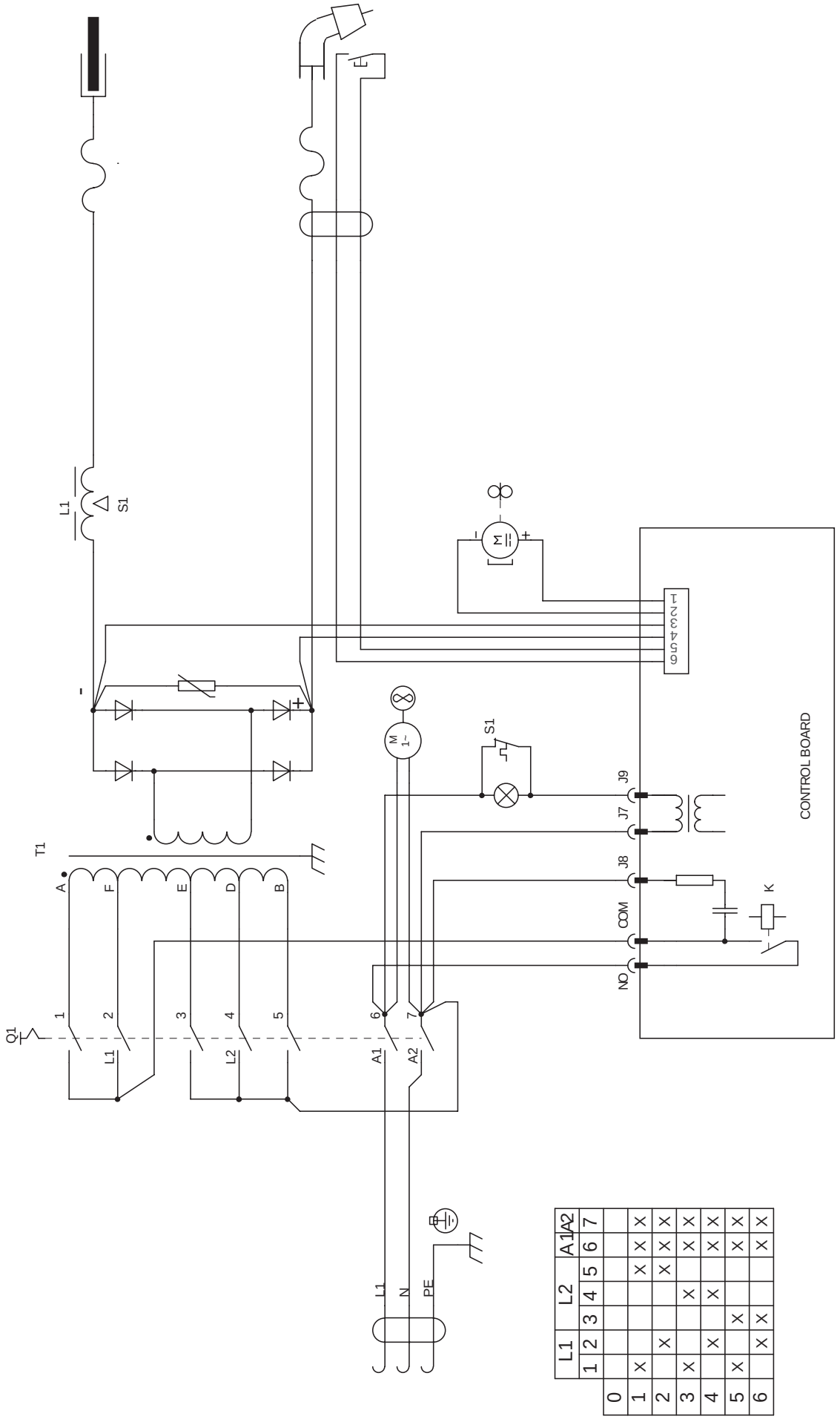

	L1			L2			A1	A2
	1	2	3	4	5	6	7	
0								
1	X				X	X	X	X
2		X			X	X	X	X
3	X						X	X
4		X		X			X	X
5	X		X				X	X
6		X	X				X	X

Esploso torcia, Dessin torche, Torch drawing, Schlauchpaket - Explosionszeichnung, Diseño seccionado antorcha.

742405

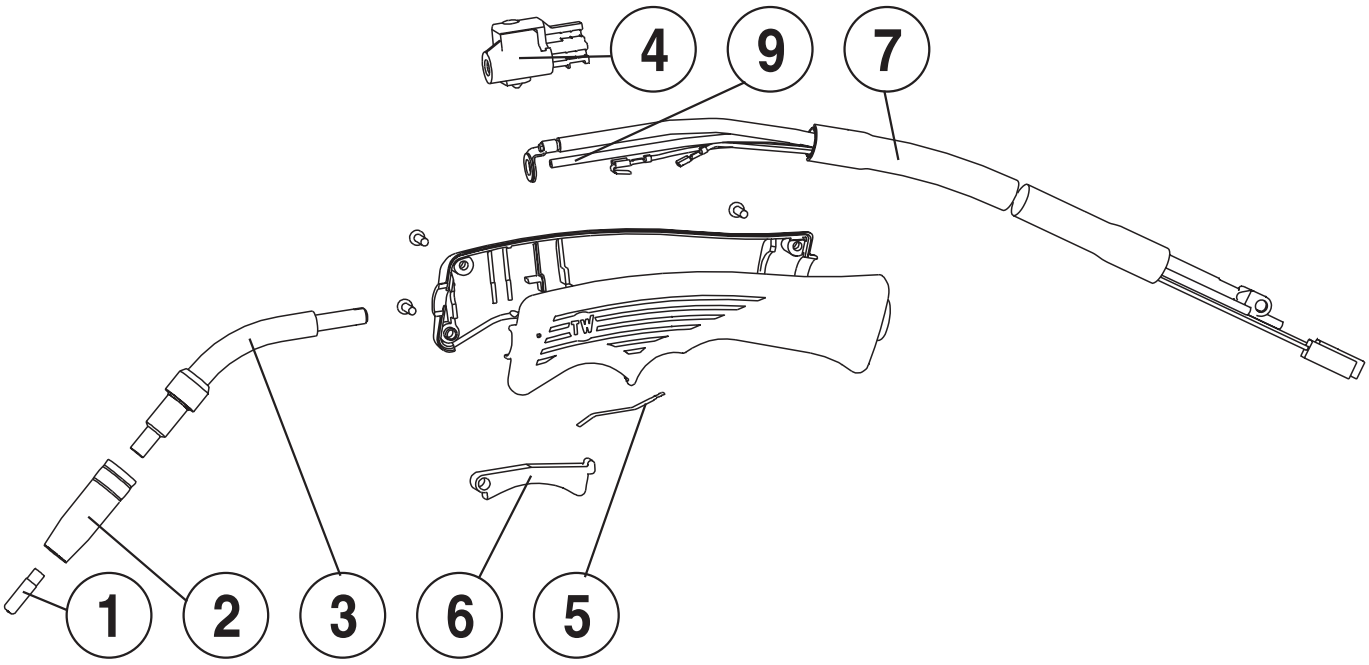

REF.	ELENCO PEZZI RICAMBIO TORCIA LISTE PIECES DETACHEES TORCHE SPARE PARTS LIST TORCH ERSATZTEILLISTE SCLAUCHPAKET PIEZAS DE REPUESTO ANTORCHA	CODICE CODE KODE
1	Tubetto di contatto d. 0,8 Mm fe m6 Tube contact d. 0,8 Mm fe m6 Contact tip d. 0,8 Mm fe m6 Kontaktdüse d. 0,8 Mm fe m6 Tubito de contacto d. 0,8 Mm fe m6	722416
2	Ugello conico tw 160–180, mt15,spoolgun Buse conique tw 160–180, mt15,spoolgun Conical nozzle tw 160–180, mt15,spoolgun Gasdüse konisch tw 160–180,mt15,spoolgun Inyector conico tw 160–180,mt15,spoolgun	722423
3	Lancia con diffusore tw 160 - 180 Lance avec diffuseur tw 160 - 180 Swan neck with diffuser tw 160 - 180 Brennerhals mit diffusor tw 160 - 180 Encorvado con diffusor tw 160 - 180	722078
4	Valvola Vanne Valve Ventil Valvula	990464
5	Molla per contatto torcia mig Ressort de contacte torche mig Contact spring for mig torch Kontaktfeder fuer mig brenner Muelle de contacto para antorcha mig	452097
6	Pulsante Poussoir Pushbutton Druckknopf Pulsador	322295
7	Kit fascio cavi 16mmq Kit faisceau des cables 16mmq Kit cables set 16mmq Kit kabelnsatzt 16mmq Kit haz de cables 16mmq	990601
9	Guaina guidafilo d. 0,6-0,8 Mm 2 m Gaine pour fil d. 0,6-0,8 Mm 2 m Wire guide hose d. 0,6-0,8 Mm 2 m Drahtführungsseele d. 0,6-0,8 Mm 2 m Vaina guia hilo d. 0,6-0,8 Mm 2 m	742413

REF.	ELENCO PEZZI RICAMBIO TORCIA LISTE PIECES DETACHEES TORCHE SPARE PARTS LIST TORCH ERSATZTEILLISTE SCLAUCHPAKET PIEZAS DE REPUESTO ANTORCHA	CODICE CODE KODE

REF.	ELENCO PEZZI RICAMBIO TORCIA LISTE PIECES DETACHEES TORCHE SPARE PARTS LIST TORCH ERSATZTEILLISTE SCLAUCHPAKET PIEZAS DE REPUESTO ANTORCHA	CODICE CODE KODE

ELENCO PEZZI DI RICAMBIO
LISTE PIECES DETACHEES
SPARE PARTS LIST
ERSATZTEILLISTE
PIEZAS DE REPUESTO

TELMIG 200/2 TURBO

Esploso macchina, Dessin appareil, Machine drawing, Explosions Zeichnung des Geräts, Diseño seccionado maquina.



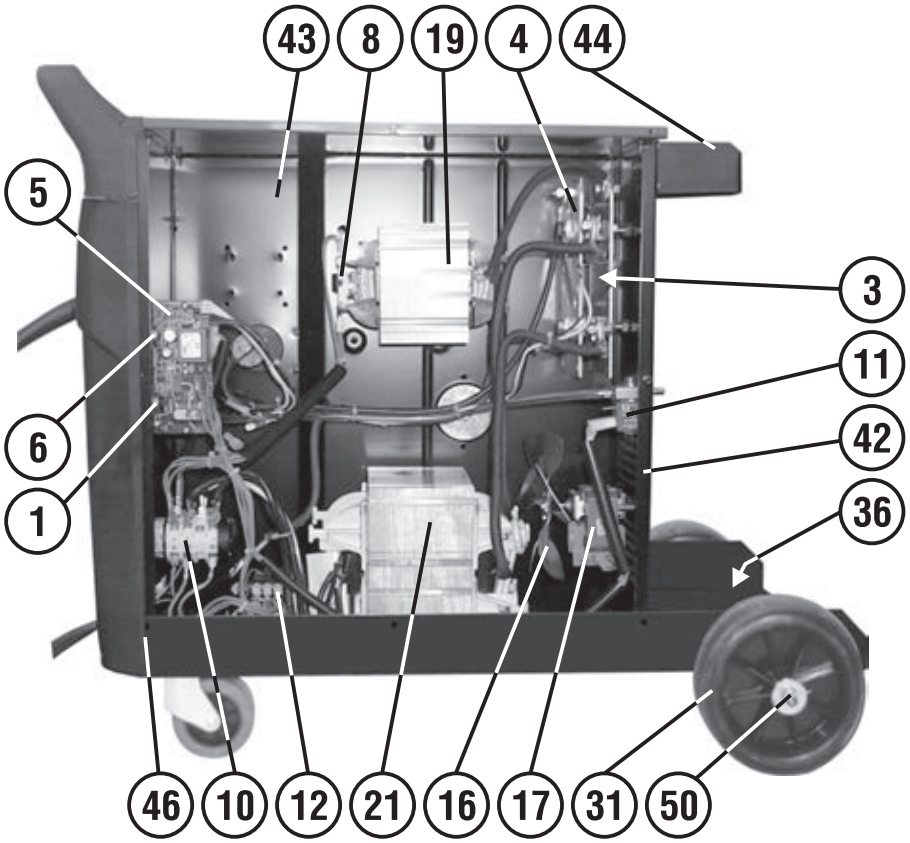

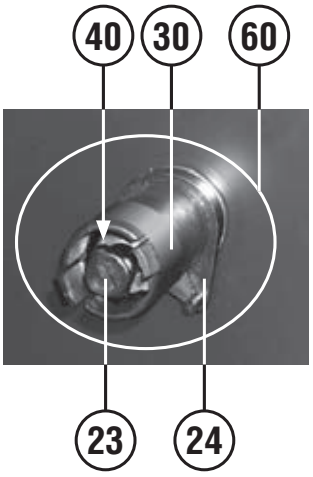

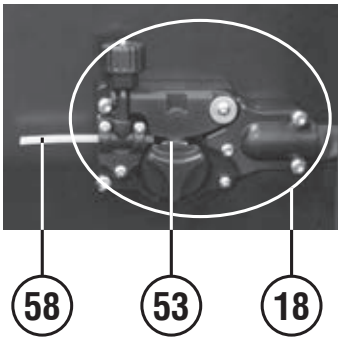

REF.	ELENCO PEZZI DI RICAMBIO PIECES DETACHEES SPARE PARTS LIST ERSATZTEILLISTE PIEZAS DE REPUESTO	CODICE CODE KODE
1	Potenziometro Potentiometre Potentiometer Potentiometer Potenciometro	113574
2	Manopola Poignee Knob Griff Manija	121424
3	Protezione raddrizzatore Protection redresseur Rectifier protection Gleichrichterschutz Proteccion rectificador	112183
4	Kit radrizzatore Kit redresseur Rectifier kit Gleichrichter kit Kit rectificador	980476
5	Kit scheda traino Kit fiche devidoir Wire feeder board kit Drahtvorschubkarte kit Kit tarjeta alimentador de hilo	980462
6	Potenziometro Potentiometre Potentiometer Potentiometer Potenciometro	113533
7	Assieme manopola per commutatore Set poigne pour commutateur Switch knob set Umschaltergriff set Set manjia para conmutador	323101
8	Termostato Thermostat Thermostat Thermostat Termostato	121716
10	Commutatore Commutateur Switch Schalter Conmutador	121510
11	Elettrovalvola Electrovanne Electrovalve Elektroventil Electrovalvula	121800
12	Teleruttore Telerupteur Contactor Schuetz Contactor	122692
13	Lampada gialla Temoin lumineaux jaune Yellow light Gelbe kontrollampe Piloto amarillo	122707
14	Cavo 16 mmq 1,8 m Cable 16 mmq 1,8 m Cable 16 mmq 1,8 m Kabel 16 mmq 1,8 m Cable 16 mmq 1,8 m	120302
15	Cavo alim. 3g2.5 2 M Cable alim. 3g2.5 2 M Mains cable 3g2.5 2 M Netzkabel 3g2.5 2 M Cable alim. 3g2.5 2 M	132191
16	Ventola Helice Fan blade Fluegelrad Aventador	152054
17	Motore ventilatore Moteur ventilateur Fan motor Ventilatormotor Motor ventilacion	152110
18	Kit motore Kit moteur Motor kit Motorkit Kit motor	981831
19	Reattanza Reactance Reactance Drossel Induccion	169379
21	Trasformatore Transformateur Transformer Transformator Transformador	169070
23	Volantino per aspo Volant pour support bobine Reel handwheel Wicklerhandrad Volant por aspa	312137
24	Aspo Support bobine Reel Wickler Aspa	322081

REF.	ELENCO PEZZI DI RICAMBIO PIECES DETACHEES SPARE PARTS LIST ERSATZTEILLISTE PIEZAS DE REPUESTO	CODICE CODE KODE
25	Pressacavo Presse cable Cable bushing Kabelhalter Prensa cable	322112
29	Attacco torcia Attelage torche Torch connection Schlauchpaketanschluss Enganche antorcha	723051
30	Distanziale Entretoise Spacer Abstandstueck Anillo por distanciar	322180
31	Ruota fissa Roue fixe Fixed wheel Fixes rad Rueda firme	322200
32	Ruota Roue Wheel Rad Rueda	322246
33	Cornice Cadre Frame Rahmen Marco	322641
36	Cavallotto Etrier Support Bügelbolzen Sosten	422817
37	Supporto girevole Support tournant Swivel support Drehbarerhalter Sosten giratorio	422969
38	Adattatore bombola argon it Adaptateur bouteille argon it Argon gas bottle it adaptor Argongasflasche it passtück Adaptador bombona argon it	432036
40	Molla per aspo Ressort pour support bobine Reel spring Wicklerfeder Muelle por aspa	452057
41	Manico Poignee Handle Handgriff Manija	312328
42	Retro Partie arriere Back panel Rueckseite Trasera	644757
43	Diaframma Diaphragme Diaphragm Diaphragma Diafragma	644078
44	Staffa per bombola Etrier pour bouteille Bracket for bottle Buegel fuer flasche Estribo para bombona	644606
45	Frontale Partie frontal Front panel Geraetefront Frontal	649559
46	Fondo Chassis Bottom Bodenteil Fondo	644961
47	Kit mantello Kit capot Cover kit Deckelkit Kit panel de cobertura	980855
49	Kit sportello Kit guichet Door kit Tuer kit Kit portezuela	980899
50	Asse per ruote Axe roues Wheels axle Radachse Eje ruedas	681092
51	Toledo 250 pinza di massa 250a Toledo 250 pince de masse 250a Toledo 250 work clamp 250a Toledo 250 masseklemme 250a Toledo 250 pinza de masa 250a	712030
53	Rullino traino 1r 0,6fe-0,8/0,9fe "c" Galet1r 0,6fe-0,8/0,9fe "c" Feed roll 1r 0,6fe-0,8/0,9fe "c" Vorschubrolle 1r 0,6fe-0,8/0,9fe "c" Roldana 1r 0,6fe-0,8/0,9fe "c"	722019

REF.	ELENCO PEZZI DI RICAMBIO PIECES DETACHEES SPARE PARTS LIST ERSATZTEILLISTE PIEZAS DE REPUESTO	CODICE CODE KODE
54	Mt15 torcia mig 3m (red) Mt15 torche mig 3m (red) Mt15 mig torch 3m (red) Mt15 mig brenner 3m (red) Mt15 antorcha mig 3m (red)	742180
55	Riduttore pressione bombola ricar. Reducteur pression bouteille recharg. Gas regulator refillable bottle Druckminderer f. Auffüllbare flasche Reductor presion bombona recargar	722341
58	Kit guaina entrata motore Kit gaine entree moteur Gas hose kit Drahtfuehrungsseelekit Kit vaina guiadera alambre	990097
60	Kit aspo Kit support bobine Reel kit Wickler kit Kit aspa	990264

Schema elettrico, Schéma électrique, Diagram, Schaltplan, Esquema de conexiones.

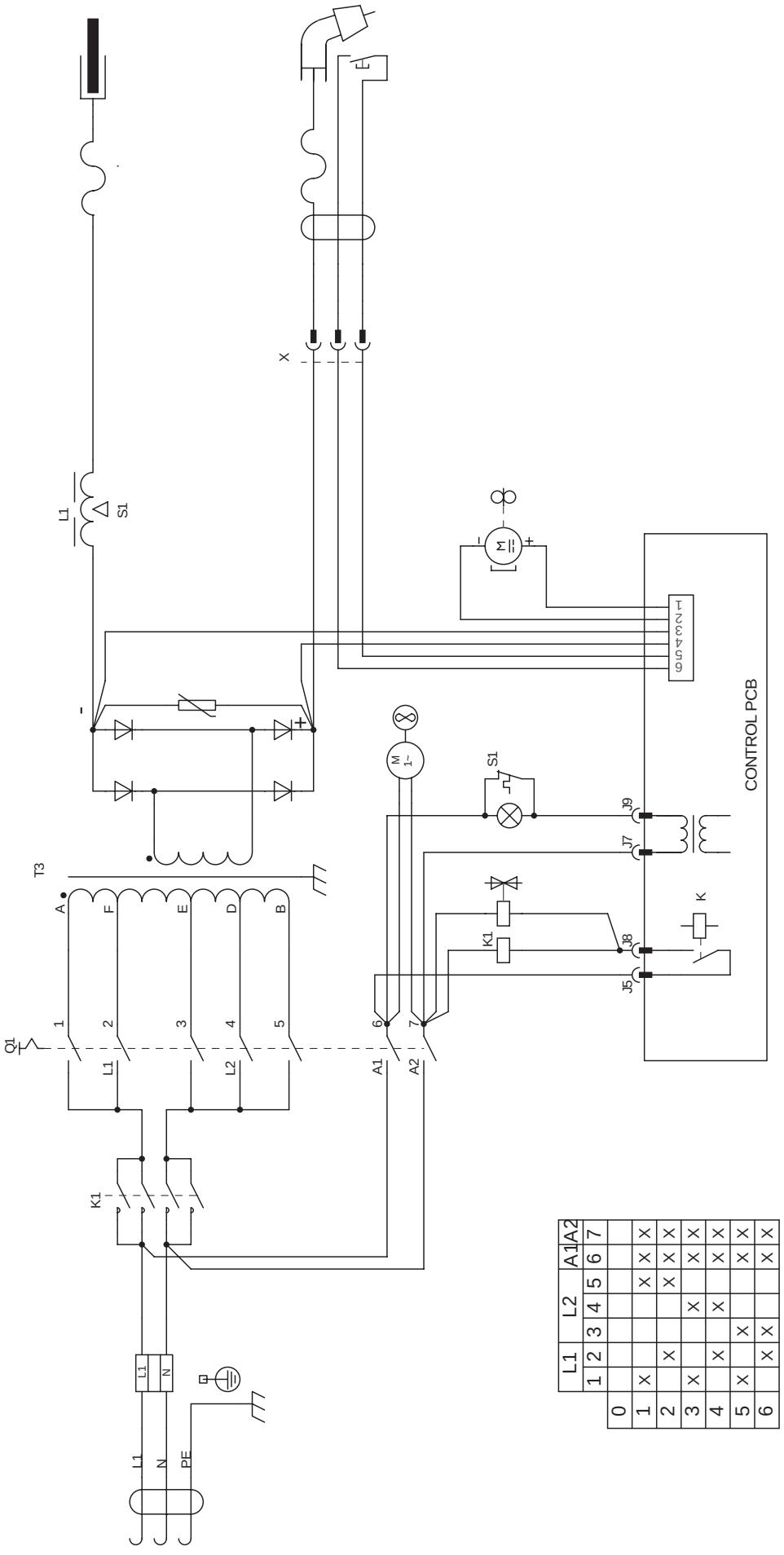

	L1				L2			A1	A2
	1	2	3	4	5	6	7		
0									
1	X				X	X	X	X	X
2		X			X	X	X	X	X
3	X			X		X	X	X	X
4		X		X				X	X
5	X		X					X	X
6		X	X					X	X

Esploso torcia, Dessin torche, Torch drawing, Schlauchpaket - Explosionszeichnung, Diseño seccionado antorcha.

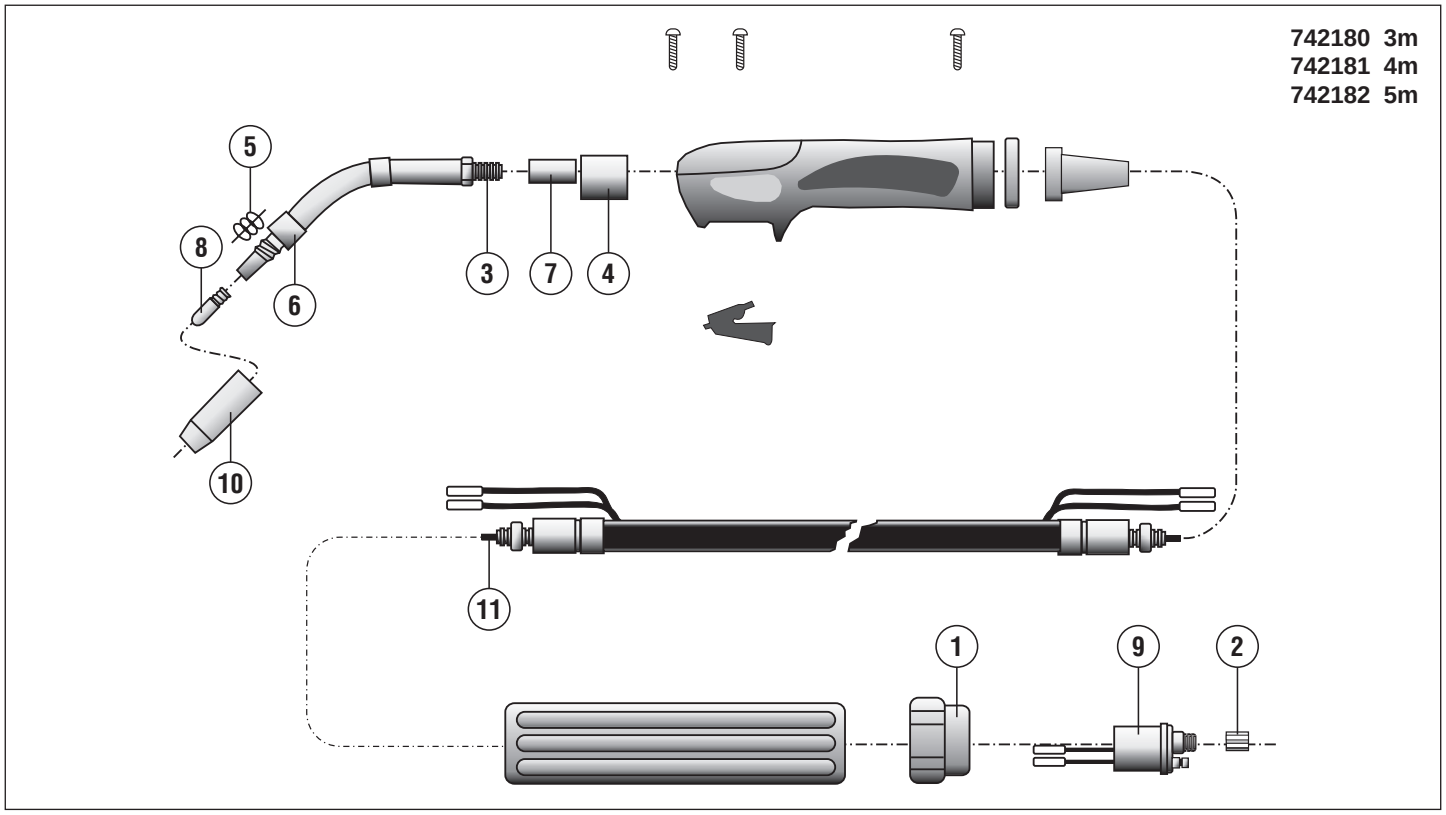

REF.	ELENCO PEZZI RICAMBIO TORCIA LISTE PIECES DETACHEES TORCHE SPARE PARTS LIST TORCH ERSATZTEILLISTE SCLAUCHPAKET PIEZAS DE REPUESTO ANTORCHA	CODICE CODE KODE
1	Ghiera fissaggio Embout fixage Ring nut Nutmutter Virola por fiyacion	722007
2	Dado fissaggio guaina Ecrou fixage gaine Liner nut Befestigungsmutter Dado por fiyacion vaina	722013
3	Lancia mt15 Lance mt15 Swan neck mt15 Brennerhals mt15 Encorvado mt15	722305
4	Isolante corpo torcia Isolant corps de torche Torch connection insulation Brenneranschlussblock isolierteil Aislador cuerpo de antorcha	722693
5	Molla per ugello tw160–180 mt15,spoolgun Ressort p. Buse tw160–180,mt15,spoolgun Nozzle spring tw 160–180, mt15, spoolgun Düsenfeder tw 160–180, mt15, spoolgun Muelle inyector tw160–180,mt15,spoolgun	722319
6	Isolante diffusore Isolant pour diffuseur Diffuser insulation Isolierbuchse Aislador diffusor	722326
7	Corpo torcia Corps de torche Torch connection Brenneranschlussblock Cuerpo de antorcha	722325
8	Tubetto di contatto d. 0,6 Mm fe Tube contact d. 0,6 Mm fe Contact tip d. 0,6 Mm fe Kontaktdüse d. 0,6 Mm fe Tubito de contacto d. 0,6 Mm fe	722415
8	Tubetto di contatto d. 0,8 Mm fe m6 Tube contact d. 0,8 Mm fe m6 Contact tip d. 0,8 Mm fe m6 Kontaktdüse d. 0,8 Mm fe m6 Tubito de contacto d. 0,8 Mm fe m6	722416
9	Corpo torcia Corp de torche Torch assy Brennerskörper Enganche antorcha	722441
10	Ugello cilindrico tw160–180,mt15,sp.Gun Bec conique tw160–180,mt15,sp.Gun Cylindrical nozzle tw160–180,mt15,sp.Gun Zylindrische düse tw160–180,mt15,sp.Gun Inyect. Cilindrico tw160–180,mt15,sp.Gun	722149
10	Ugello conico tw 160–180, mt15,spoolgun Buse conique tw 160–180, mt15,spoolgun Conical nozzle tw 160–180, mt15,spoolgun Gasdüse konisch tw 160–180,mt15,spoolgun Inyector conico tw 160–180,mt15,spoolgun	722423

REF.	ELENCO PEZZI RICAMBIO TORCIA LISTE PIECES DETACHEES TORCHE SPARE PARTS LIST TORCH ERSATZTEILLISTE SCLAUCHPAKET PIEZAS DE REPUESTO ANTORCHA	CODICE CODE KODE
11	Guaina guidafilo ø0.6-0.8 3m blu Gaine pour fil ø0.6-0.8 3m bleu Wire guide hose ø0.6-0.8 3m blue Drahtführungsseele ø0.6-0.8 3m blue Vaina guia hilo ø0.6-0.8 3m blue	722437
11	Guaina guidafilo ø1.0-1.2 3m rossa Gaine pour fil ø1.0-1.2 3m rouge Wire guide hose ø1.0-1.2 3m red Drahtführungsseele ø1.0-1.2 3m rot Vaina guia hilo ø1.0-1.2 3m roja	722689

REF.	ELENCO PEZZI RICAMBIO TORCIA LISTE PIECES DETACHEES TORCHE SPARE PARTS LIST TORCH ERSATZTEILLISTE SCLAUCHPAKET PIEZAS DE REPUESTO ANTORCHA	CODICE CODE KODE

ELENCO PEZZI DI RICAMBIO
LISTE PIECES DETACHEES
SPARE PARTS LIST
ERSATZTEILLISTE
PIEZAS DE REPUESTO

TELMIG 281/2 TURBO

Esploso macchina, Dessin appareil, Machine drawing, Explosions Zeichnung des Geräts, Diseño seccionado maquina.



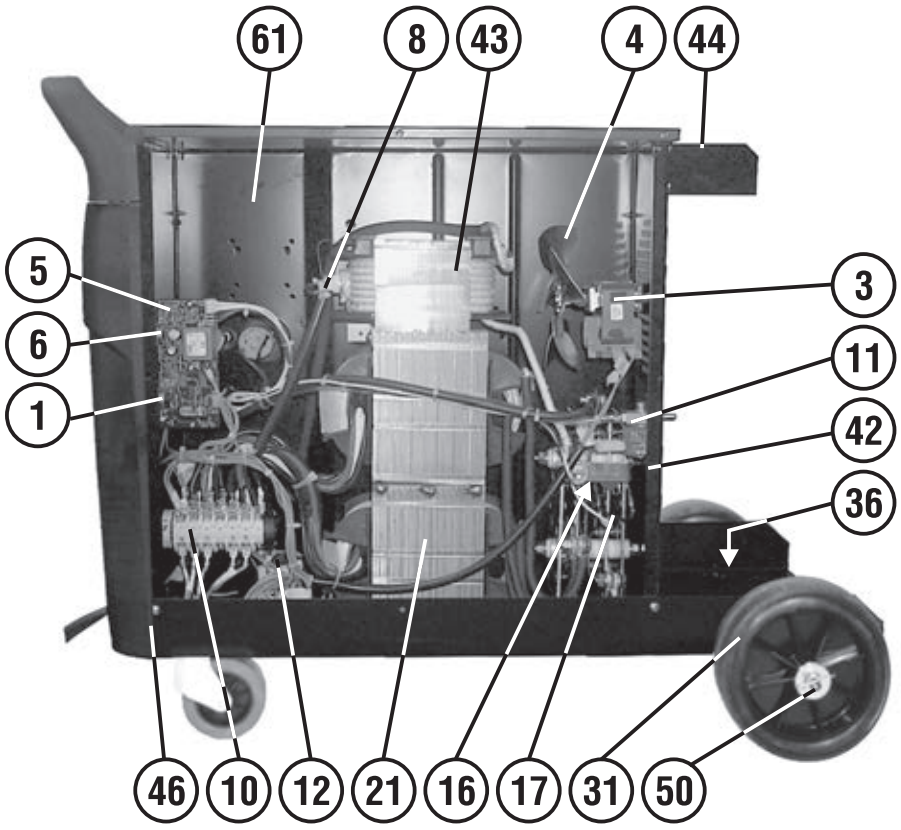

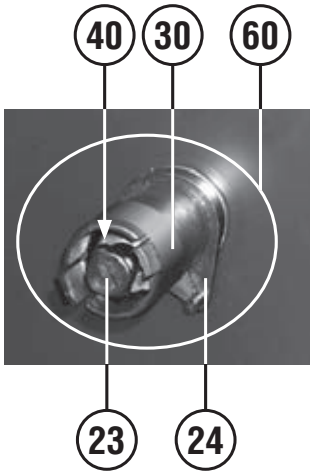

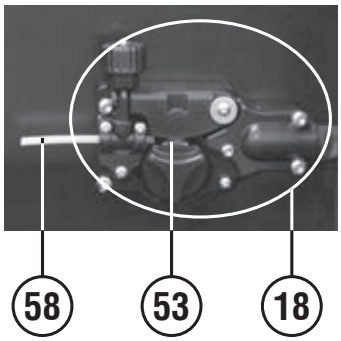

REF.	ELENCO PEZZI DI RICAMBIO PIECES DETACHEES SPARE PARTS LIST ERSATZTEILLISTE PIEZAS DE REPUESTO	CODICE CODE KODE
1	Potenziometro Potentiometre Potentiometer Potentiometer Potenciometro	113574
2	Manopola Poignee Knob Griff Manija	121424
3	Motore ventilatore Moteur ventilateur Fan motor Ventilatormotor Motor ventilacion	152110
4	Ventola Helice Fan blade Fluegelrad Aventador	152054
5	Kit scheda traino Kit fiche devidoir Wire feeder board kit Drahtvorschubkarte kit Kit tarjeta alimentador de hilo	980462
6	Potenziometro Potentiometre Potentiometer Potentiometer Potenciometro	113533
7	Assieme manopola per commutatore Set poigne pour commutateur Switch knob set Umschaltergriff set Set manjia para conmutador	323101
8	Termostato Thermostat Thermostat Thermostat Termostato	121716
10	Commutatore Commutateur Switch Schalter Conmutador	121520
11	Elettrovalvola Electrovanne Electrovalve Elektroventil Electrovalvula	121800
12	Contattore Contacteur Contactor Kontaktgeber Contactor	121089
13	Lampada gialla Temoin lumineaux jaune Yellow light Gelbe kontrollampe Piloto amarillo	122707
14	Cavo 25 mmq 2 m Cable 25 mmq 2 m Cable 25 mmq 2 m Kabel 25 mmq 2 m Cable 25 mmq 2 m	123466
15	Cavo alim. 3g2.5 2 M Cable alim. 3g2.5 2 M Mains cable 3g2.5 2 M Netzkabel 3g2.5 2 M Cable alim. 3g2.5 2 M	132191
16	Protezione raddrizzatore Protection redresseur Rectifier protection Gleichrichterschutz Protector rectificador	112182
17	Raddrizzatore monofase Redresseur monophasée Single-phase rectifier Einphasiger gleichrichter Rectificador monofàsico	121068
18	Kit motore Kit moteur Motor kit Motorkit Kit motor	981831
21	Trasformatore Transformateur Transformer Transformator Transformador	169298
23	Volantino per aspo Volant pour support bobine Reel handwheel Wicklerhandrad Volant por aspa	312137
24	Aspo Support bobine Reel Wickler Aspa	322081
25	Kit pressacavo + ghiera Kit presse cable + embout Kit cable bushing + ring nut Kit kabelhalter + nutmutter Kit prensa cable + virola	990046

REF.	ELENCO PEZZI DI RICAMBIO PIECES DETACHEES SPARE PARTS LIST ERSATZTEILLISTE PIEZAS DE REPUESTO	CODICE CODE KODE
29	Attacco torcia Attelage torche Torch connection Schlauchpaketanschluss Enganche antorcha	723051
30	Distanziale Entretoise Spacer Abstandstueck Anillo por distanciar	322180
31	Ruota fissa Roue fixe Fixed wheel Fixes rad Rueda firme	322200
32	Ruota Roue Wheel Rad Rueda	322246
33	Cornice Cadre Frame Rahmen Marco	322641
36	Cavallotto Etrier Support Bügelbolzen Sosten	422817
37	Supporto girevole Support tournant Swivel support Drehbarerhalter Sosten giratorio	422969
38	Adattatore bombola argon it Adaptateur bouteille argon it Argon gas bottle it adaptor Argongasflasche it passtück Adaptador bombona argon it	432036
40	Molla per aspo Ressort pour support bobine Reel spring Wicklerfeder Muelle por aspa	452057
41	Manico Poignee Handle Handgriff Manija	312328
42	Retro Partie arriere Back panel Rueckseite Trasera	644077
43	Reattanza Reactance Reactance Drossel Induccion	169381
44	Staffa per bombola Etrier pour bouteille Bracket for bottle Buegel fuer flasche Estribo para bombona	644606
45	Frontale Partie frontal Front panel Geraetefront Frontal	649561
46	Fondo Chassis Bottom Bodenteil Fondo	644967
47	Kit mantello Kit capot Cover kit Deckelkit Kit panel de cobertura	980855
49	Kit sportello Kit guichet Door kit Tuer kit Kit portezuela	980899
50	Asse per ruote Axe roues Wheels axle Radachse Eje ruedas	681092
51	Toledo 300 pinza di massa 300a Toledo 300 borne de masse 300a Toledo 300 work clamp 300a Toledo 300 masseklemme 300a Toledo 300 borne de masa 300a	712231
53	Rullino traino 1r 0,6fe-0,8/0,9fe “c” Galet1r 0,6fe-0,8/0,9fe “c” Feed roll 1r 0,6fe-0,8/0,9fe “c” Vorschubrolle 1r 0,6fe-0,8/0,9fe “c” Roldana 1r 0,6fe-0,8/0,9fe “c”	722019
54	Mt25 torcia mig 3m Mt25 torche mig 3m Mt25 mig torch 3m Mt25 mig brenner 3m Mt25 antorcha mig 3m	742183

REF.	ELENCO PEZZI DI RICAMBIO PIECES DETACHEES SPARE PARTS LIST ERSATZTEILLISTE PIEZAS DE REPUESTO	CODICE CODE KODE
55	Riduttore pressione bombola ricar. Reducteur pression bouteille recharg. Gas regulator refillable bottle Druckminderer f. Auffüllbare flasche Reductor presion bombona recargar	722341
58	Kit guaina entrata motore Kit gaine entree moteur Gas hose kit Drahtfuehrungsseelekit Kit vaina guiadera alambre	990097
60	Kit aspo Kit support bobine Reel kit Wickler kit Kit aspa	990264
61	Diaframma Diaphragme Diaphragm Diaphragma Diafragma	644078

Schema elettrico, Schéma électrique, Diagram, Schaltplan, Esquema de conexiones.

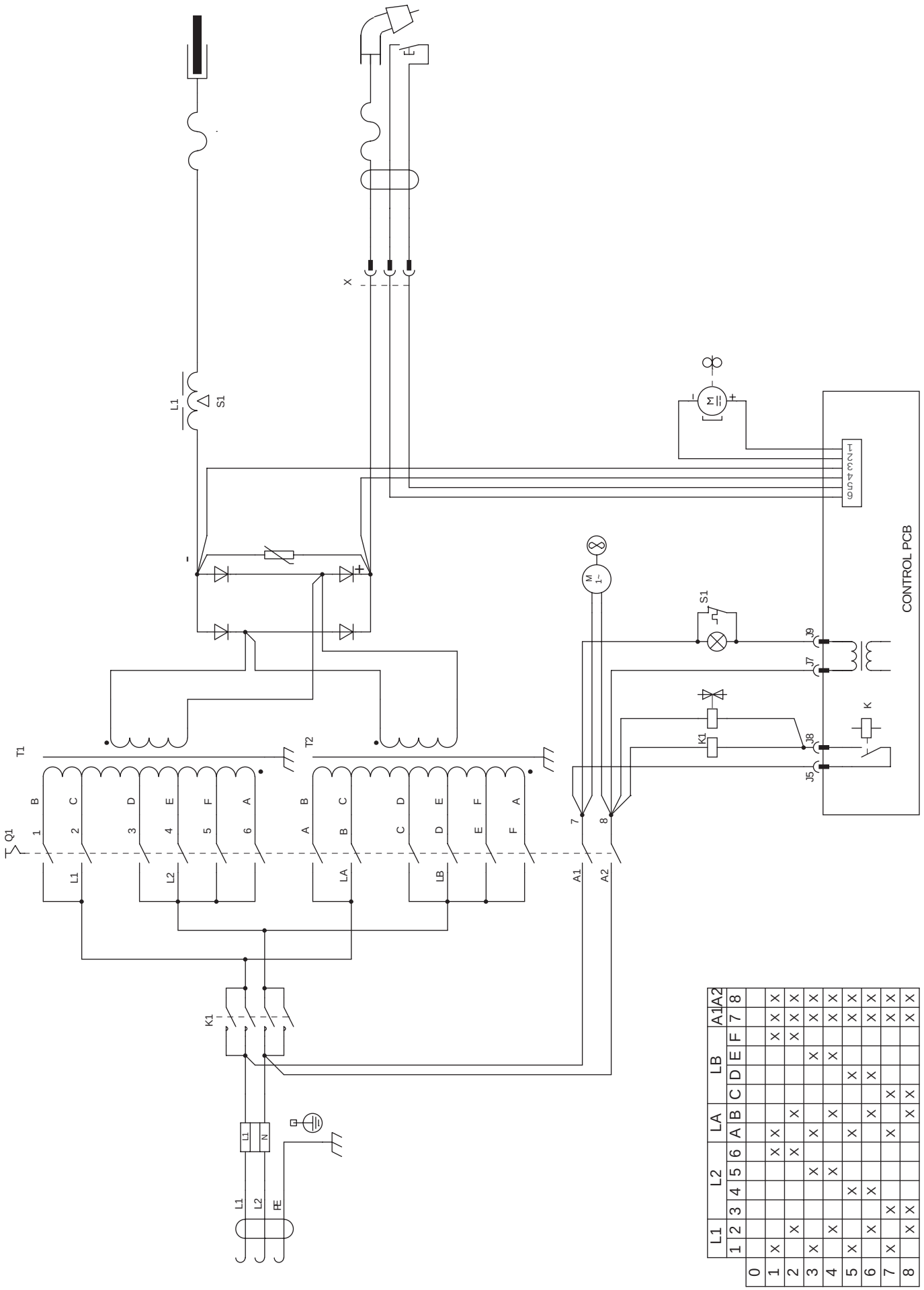

	L1						L2						LA						LB						A1	A2
	1	2	3	4	5	6	1	2	3	4	5	6	A	B	C	D	E	F	A	B	C	D	E	F	7	8
0																										
1	X					X						X	X												X	X
2		X				X						X		X											X	X
3	X												X												X	X
4		X												X											X	X
5	X												X												X	X
6		X												X											X	X
7	X		X										X												X	X
8		X	X											X	X										X	X

Esploso torcia, Dessin torche, Torch drawing, Schlauchpaket - Explosionszeichnung, Diseño seccionado antorcha.

742183 3m
742184 4m
742185 5m

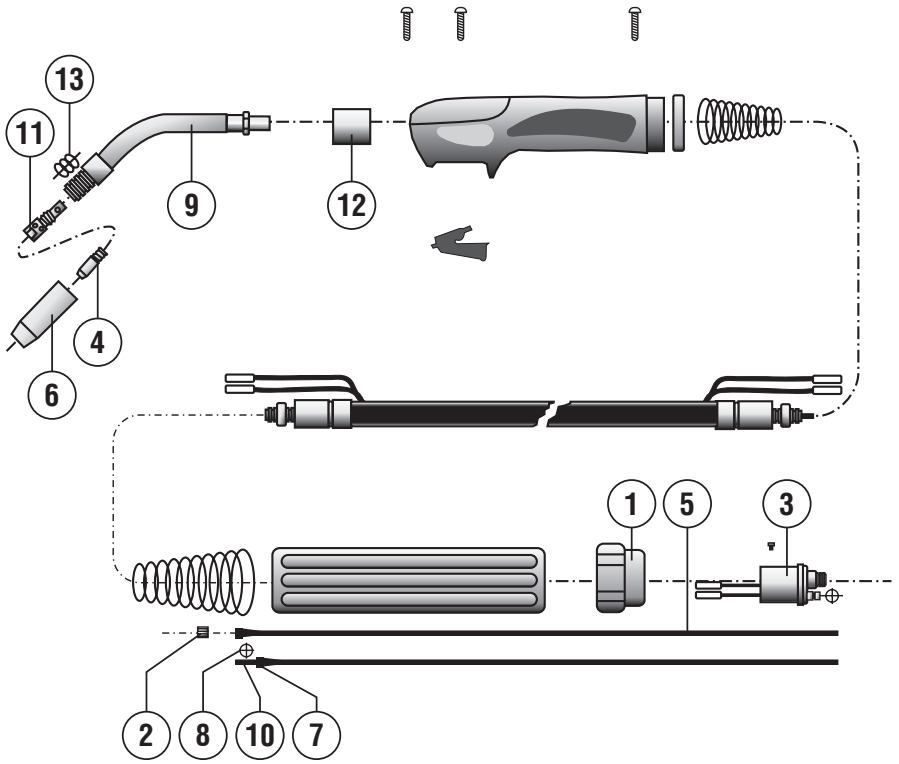

REF.	ELENCO PEZZI RICAMBIO TORCIA LISTE PIECES DETACHEES TORCHE SPARE PARTS LIST TORCH ERSATZTEILLISTE SCLAUCHPAKET PIEZAS DE REPUESTO ANTORCHA	CODICE CODE KODE
1	Ghiera fissaggio Embout fixage Ring nut Nutmutter Virola por fiyacion	722007
2	Dado fissaggio guaina Ecrou fixage gaine Liner nut Befestigungsmutter Dado por fiyacion vaina	722013
3	Corpo torcia Corp de torche Torch assy Brennerskörper Enganche antorcha	722441
4	Tubetto di contatto d. 1,2 Mm fe Tube contact d. 1,2 Mm fe Contact tip d. 1,2 Mm fe Kontaktdüse d. 1,2 Mm fe Tubito de contacto d. 1,2 Mm fe	722682
4	Tubetto di contatto d. 1 Mm fe m6 l=28mm Tube contact d. 1 Mm fe m6 l=28mm Contact tip d. 1 Mm fe m6 l=28mm Kontaktdüse d. 1 Mm fe m6 l=28mm Tubito de contacto d. 1 Mm fe m6 l=28mm	722681
4	Tubetto di contatto d. 0,8 Mm m6 Tube contact d. 0,8 Mm m6 Contact tip d. 0,8 Mm m6 Kontaktdüse d. 0,8 Mm m6 Tubito de contacto d. 0,8 Mm m6	722680
4	Tubetto di contatto d. 1,2 Mm al/flux m6 Tube contact d. 1,2 Mm al/flux m6 Contact tip d. 1,2 Mm al/flux m6 Kontaktdüse d. 1,2 Mm al/flux m6 Tubito de contacto d. 1,2 Mm al/flux m6	722553
4	Tubetto di contatto d. 1 Mm al/flux m6 Tube contact d. 1 Mm al/flux m6 Contact tip d. 1 Mm al/flux m6 Kontaktdüse d. 1 Mm al/flux m6 Tubito de contacto d. 1 Mm al/flux m6	722552
4	Tubetto di contatto d. 0,6 Mm fe Tube contact d. 0,6 Mm fe Contact tip d. 0,6 Mm fe Kontaktdüse d. 0,6 Mm fe Tubito de contacto d. 0,6 Mm fe	722415
5	Guaina guidafilo ø0.6-0.8 3m blu Gaine pour fil ø0.6-0.8 3m bleu Wire guide hose ø0.6-0.8 3m blue Drahtführungsseele ø0.6-0.8 3m blue Vaina guia hilo ø0.6-0.8 3m blue	722437
5	Guaina guidafilo ø1.0-1.2 3m rossa Gaine pour fil ø1.0-1.2 3m rouge Wire guide hose ø1.0-1.2 3m red Drahtführungsseele ø1.0-1.2 3m rot Vaina guia hilo ø1.0-1.2 3m roja	722689
5	Guaina guidafilo ø1.0-1.2 4m al Gaine pour fil ø 1.0-1.2 4m al Wire guide hose ø 1.0-1.2 4m al Drahtführungsseele ø 1.0-1.2 4m al Vaina guia hilo ø 1.0-1.2 4m al	742984

REF.	ELENCO PEZZI RICAMBIO TORCIA LISTE PIECES DETACHEES TORCHE SPARE PARTS LIST TORCH ERSATZTEILLISTE SCLAUCHPAKET PIEZAS DE REPUESTO ANTORCHA	CODICE CODE KODE
6	Ugello cilindrico mt25 Buse cylindrique mt25 Cylindrical nozzle mt25 Zylindrische düse mt25 Inyector cilindrico mt25	722684
6	Ugello conico mt25 Buse conique mt25 Conical nozzle mt25 Konische düse mt25 Inyector conico mt25	722685
6	Ugello testa fine mt25 Buse a tete fine mt25 Thin headed nozzle mt25 Verengte düse mt25 Inyector cabeza fina mt25	722686
6	Ugello per puntatura d. 18 Mm Buse pointage d. 18 Mm Spot welding nozzle d. 18 Mm Punktschweissgasdüse d. 18 Mm Inyector por puntos d. 18 Mm	722687
7	Nipples ferma guaina Nipples serre gaine Wire guide locking nipples Drahtseeleklemmnipples Nipples de bloqueo vaina	722598
8	Anello or Bague or Or ring Or ring Anillo or	722601
8	Anello or Anneau or Or ring Or ring Anillo or	722606
9	Lancia mt25 Lance mt25 Swan neck mt25 Brennerhals mt25 Encorvado mt25	722696
10	Tubetto ferma guaina Tuyau serre gaine Wire guide locking tube Drahtseeleklemmrohr Tubito de bloqueo vaina	722600
11	Diffusore gas mt25 Diffuseur gaz mt25 Gas diffuser mt25 Gasdiffusor mt25 Diffusor gas mt25	722688
12	Isolante corpo torcia Isolant corps de torche Torch connection insulation Brenneranschlussblock isolierteil Aislador cuerpo de antorcha	722693
13	Molla per ugello mt25 Ressort pour buse mt25 Nozzle spring mt25 Düsenfeder mt25 Muelle por inyector mt25	722690

REF.	ELENCO PEZZI RICAMBIO TORCIA LISTE PIECES DETACHEES TORCHE SPARE PARTS LIST TORCH ERSATZTEILLISTE SCLAUCHPAKET PIEZAS DE REPUESTO ANTORCHA	CODICE CODE KODE

ELENCO PEZZI DI RICAMBIO
LISTE PIECES DETACHEES
SPARE PARTS LIST
ERSATZTEILLISTE
PIEZAS DE REPUESTO

TELMIG 250/2 TURBO

Esploso macchina, Dessin appareil, Machine drawing, Explosions Zeichnung des Geräts, Diseño seccionado maquina.

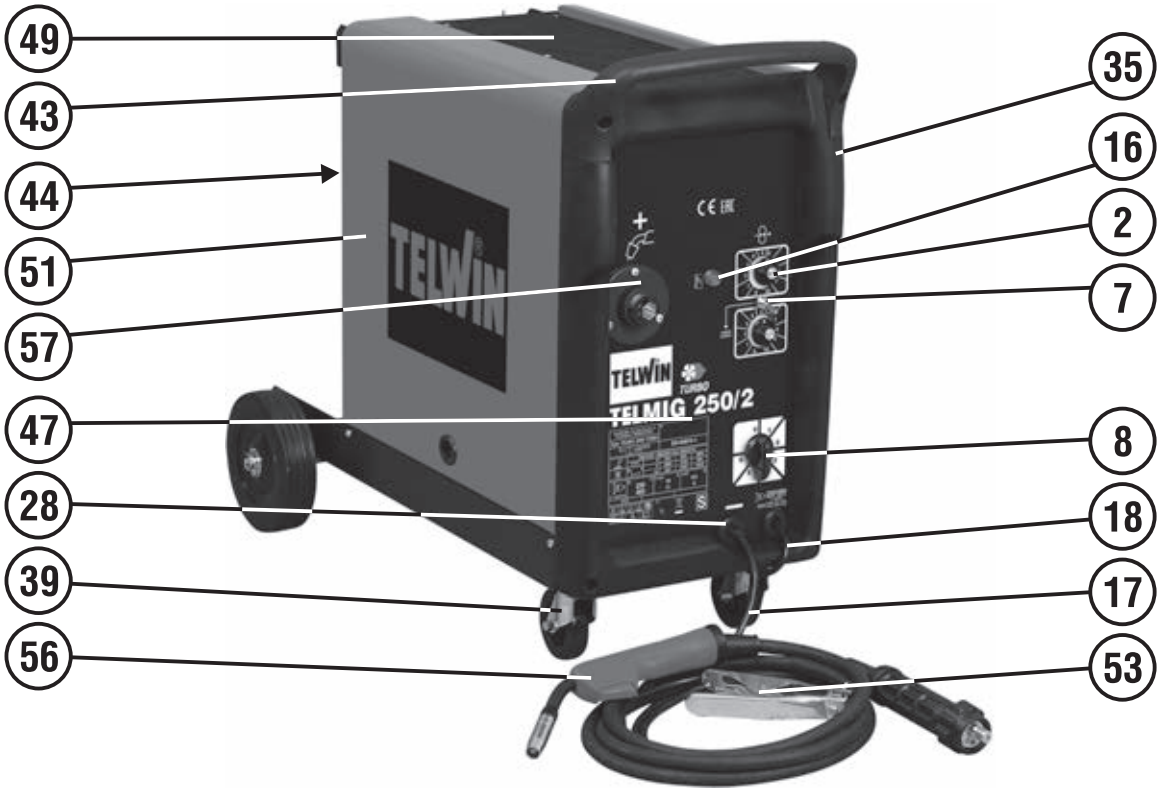

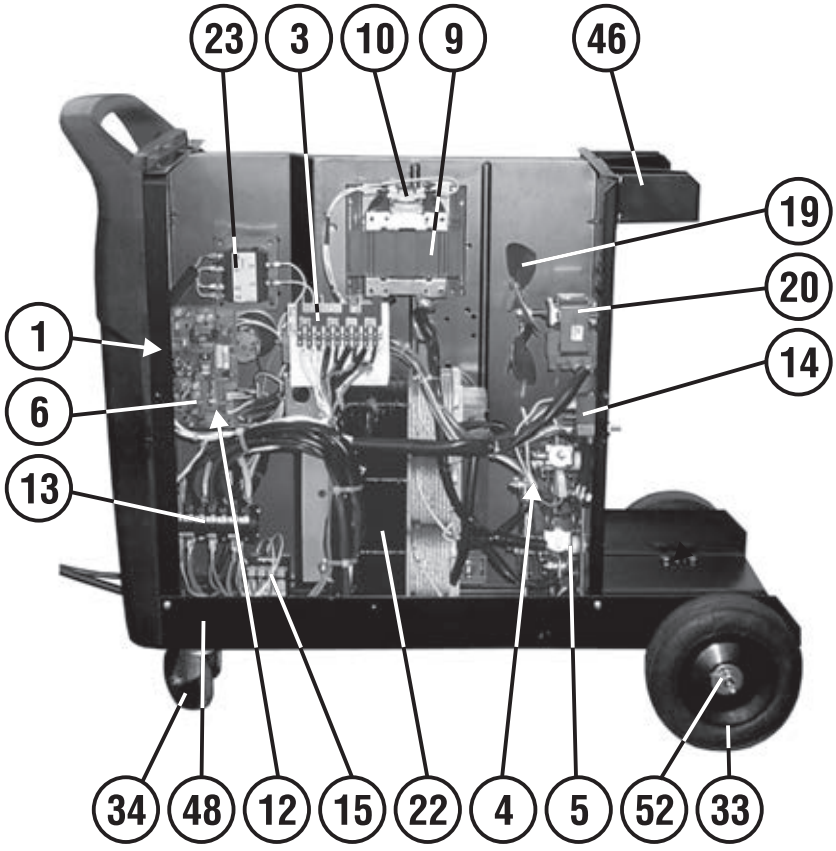

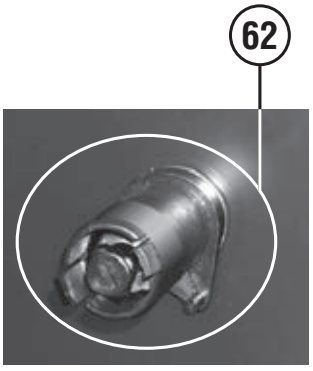

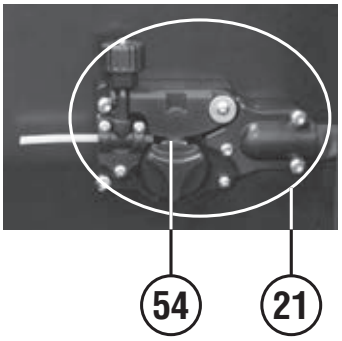

REF.	ELENCO PEZZI DI RICAMBIO PIECES DETACHEES SPARE PARTS LIST ERSATZTEILLISTE PIEZAS DE REPUESTO	CODICE CODE KODE
1	Potenziometro Potentiometre Potentiometer Potentiometer Potenciometro	116411
2	Manopola Poignee Knob Griff Manija	121424
3	Basetta cambio tensione Platine pour changer tension Changing voltage card Wechselspannungskarte Base cambio tension	112165
4	Protezione raddrizzatore Protection redresseur Rectifier protection Gleichrichterschutz Proteccion rectificador	112183
5	Raddrizzatore Redresseur Rectifier Gleichrichter Rectificador	112311
6	Kit scheda controllo Kit fiche de controle Control pcb kit Kontrollekarte kit Kit tarjeta de controlo	980713
7	Deviatore a levetta Interrupteur a levier Switch Schalter Interrupteur a levier	122052
8	Assieme manopola per commutatore Set poigne pour commutateur Switch knob set Umschaltergriff set Set manjia para conmutador	323101
9	Reattanza Reactance Reactance Drossel Induccion	169374
10	Termostato Thermostat Thermostat Thermostat Termostato	121713
12	Fusibile Fusible Fuse Sicherung Fusible	122432
13	Commutatore Commutateur Switch Schalter Conmutador	121169
14	Elettrovalvola Electrovanne Electrovalve Elektroventil Electrovalvula	121801
15	Teleruttore Telerupteur Contactor Schuetz Contactor	122694
16	Lampada gialla Temoin lumineaux jaune Yellow pilot lamp Gelbe kontrollampe Piloto amarillo	122594
17	Cavo 25 mmq 2 m Cable 25 mmq 2 m Cable 25 mmq 2 m Kabel 25 mmq 2 m Cable 25 mmq 2 m	123466
18	Cavo alim. 4g2.5 2 M Cable alim. 4g2.5 2 M Mains cable 4g2.5 2 M Netzkabel 4g2.5 2 M Cable alim. 4g2.5 2 M	132244
19	Ventola Helice Fan blade Fluegelrad Aventador	152054
20	Motore ventilatore Moteur ventilateur Fan motor Ventilatormotor Motor ventilacion	152110
21	Kit motore Kit moteur Motor kit Motorkit Kit motor	981831
22	Trasformatore Transformateur Transformer Transformator Transformador	169753
23	Trasformatore ausiliario Transformateur auxiliaire Auxiliary transformer Hilfstransformator Transformador ausiliario	164270
28	Kit pressacavo Kit presse cable Cable bushing kit Kabelhalter kit Kit prensa cable	990439
33	Ruota fissa Roue fixe Fixed wheel Fixes rad Rueda firme	322200
34	Ruota Roue Wheel Rad Rueda	322246
35	Cornice Cadre Frame Rahmen Marco	322641
39	Supporto girevole Support tournant Swivel support Drehbarerhalter Sosten giratorio	422969
40	Adattatore bombola argon it Adaptateur bouteille argon it Argon gas bottle it adaptor Argongasflasche it passtück Adaptador bombona argon it	432036
43	Manico Poignee Handle Handgriff Manija	312328
44	Retro Partie arriere Back panel Rueckseite Trasera	644077
46	Staffa per bombola Etrier pour bouteille Bracket for bottle Buegel fuer flasche Estribo para bombona	644606
47	Frontale Partie frontal Front panel Geraetefront Frontal	649553
48	Fondo Chassis Bottom Bodenteil Fondo	644967
49	Kit mantello Kit capot Cover kit Deckelkit Kit panel de cobertura	980855
51	Kit sportello Kit guichet Door kit Tuer kit Kit portezuela	980899
52	Asse per ruote Axe roues Wheels axle Radachse Eje ruedas	681092
53	Toledo 250 pinza di massa 250a Toledo 250 pince de masse 250a Toledo 250 work clamp 250a Toledo 250 masseklemme 250a Toledo 250 pinza de masa 250a	712030
54	Rullino traino 1r 0,6fe-0,8/0,9fe “c” Galet1r 0,6fe-0,8/0,9fe “c” Feed roll 1r 0,6fe-0,8/0,9fe “c” Vorschubrolle 1r 0,6fe-0,8/0,9fe “c” Roldana 1r 0,6fe-0,8/0,9fe “c”	722019
55	Riduttore pressione bombola ricar. Reducteur pression bouteille recharg. Gas regulator refillable bottle Druckminderer f. Auffüllbare flasche Reductor presion bombona recargar	722341
56	Mt15 torcia mig 3m (red) Mt15 torche mig 3m (red) Mt15 mig torch 3m (red) Mt15 mig brenner 3m (red) Mt15 antorcha mig 3m (red)	742180
57	Attacco torcia Attelage torche Torch connection Schlauchpaketanschluss Enganche antorcha	723051
62	Kit aspo Kit support bobine Reel kit Wickler kit Kit aspa	990264

Schema elettrico, Schéma électrique, Diagram, Schaltplan, Esquema de conexiones.

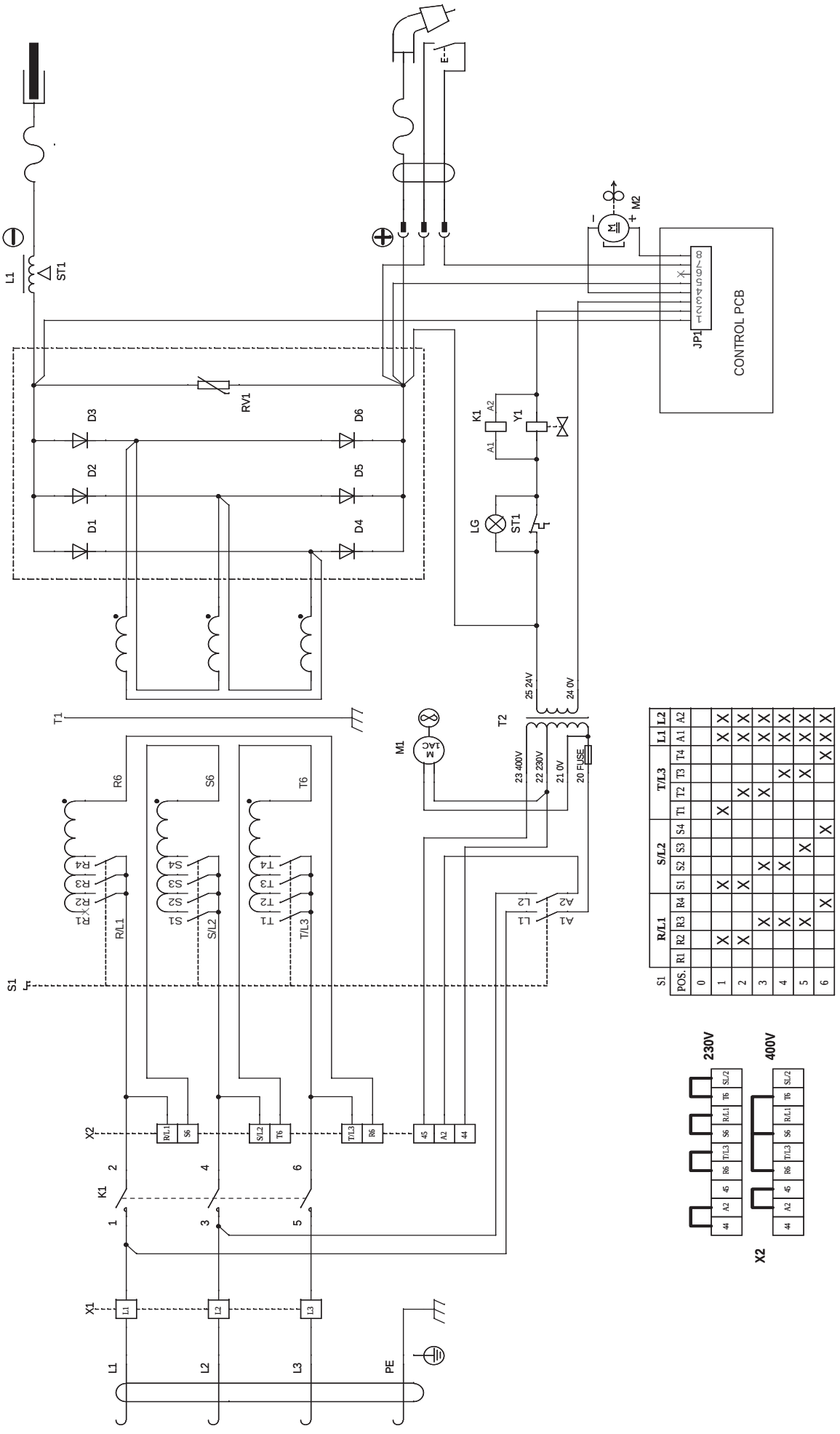

S1 POS.	R/L1 R1	R/L1 R2	R/L1 R3	R/L1 R4	S/L2 S1	S/L2 S2	S/L2 S3	S/L2 S4	T/L3 T1	T/L3 T2	T/L3 T3	T/L3 T4	L1 L2 A1	L1 L2 A2
0														
1		X			X				X				X	X
2		X			X					X			X	X
3			X			X				X			X	X
4			X			X					X		X	X
5			X				X				X		X	X
6				X				X				X	X	X

Esploso torcia, Dessin torche, Torch drawing, Schlauchpaket - Explosionszeichnung, Diseño seccionado antorcha.

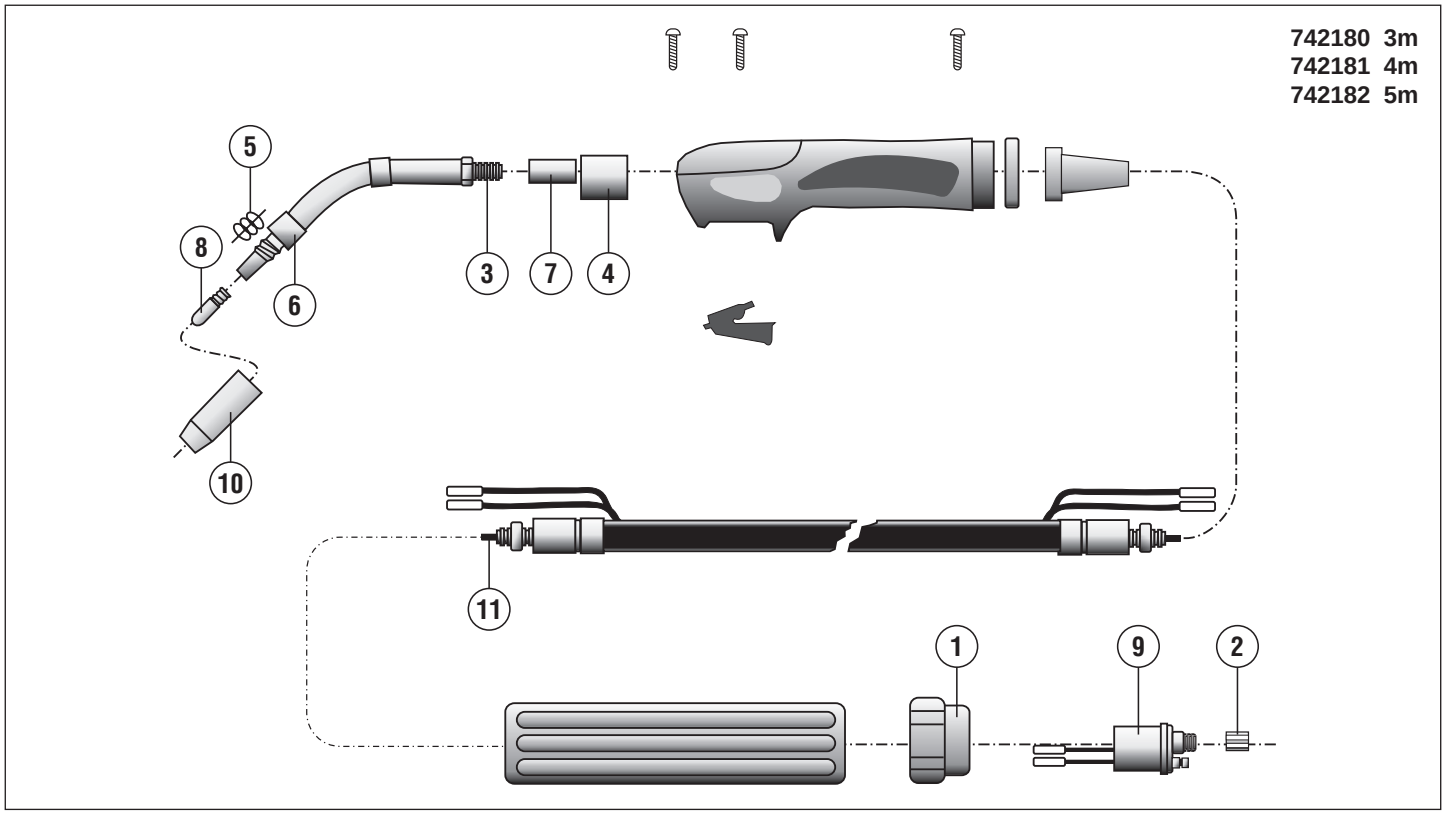

REF.	ELENCO PEZZI RICAMBIO TORCIA LISTE PIECES DETACHEES TORCHE SPARE PARTS LIST TORCH ERSATZTEILLISTE SCLAUCHPAKET PIEZAS DE REPUESTO ANTORCHA	CODICE CODE KODE
1	Ghiera fissaggio Embout fixage Ring nut Nutmutter Virola por fiyacion	722007
2	Dado fissaggio guaina Ecrou fixage gaine Liner nut Befestigungsmutter Dado por fiyacion vaina	722013
3	Lancia mt15 Lance mt15 Swan neck mt15 Brennerhals mt15 Encorvado mt15	722305
4	Isolante corpo torcia Isolant corps de torche Torch connection insulation Brenneranschlussblock isolierteil Aislador cuerpo de antorcha	722693
5	Molla per ugello tw160–180 mt15,spoolgun Ressort p. Buse tw160–180,mt15,spoolgun Nozzle spring tw 160–180, mt15, spoolgun Düsenfeder tw 160–180, mt15, spoolgun Muelle inyector tw160–180,mt15,spoolgun	722319
6	Isolante diffusore Isolant pour diffuseur Diffuser insulation Isolierbuchse Aislador diffusor	722326
7	Corpo torcia Corps de torche Torch connection Brenneranschlussblock Cuerpo de antorcha	722325
8	Tubetto di contatto d. 0,6 Mm fe Tube contact d. 0,6 Mm fe Contact tip d. 0,6 Mm fe Kontaktdüse d. 0,6 Mm fe Tubito de contacto d. 0,6 Mm fe	722415
8	Tubetto di contatto d. 0,8 Mm fe m6 Tube contact d. 0,8 Mm fe m6 Contact tip d. 0,8 Mm fe m6 Kontaktdüse d. 0,8 Mm fe m6 Tubito de contacto d. 0,8 Mm fe m6	722416
9	Corpo torcia Corp de torche Torch assy Brennerskörper Enganche antorcha	722441
10	Ugello cilindrico tw160–180,mt15,sp.Gun Bec conique tw160–180,mt15,sp.Gun Cylindrical nozzle tw160–180,mt15,sp.Gun Zylindrische düse tw160–180,mt15,sp.Gun Inyect. Cilindrico tw160–180,mt15,sp.Gun	722149
10	Ugello conico tw 160–180, mt15,spoolgun Buse conique tw 160–180, mt15,spoolgun Conical nozzle tw 160–180, mt15,spoolgun Gasdüse konisch tw 160–180,mt15,spoolgun Inyector conico tw 160–180,mt15,spoolgun	722423

REF.	ELENCO PEZZI RICAMBIO TORCIA LISTE PIECES DETACHEES TORCHE SPARE PARTS LIST TORCH ERSATZTEILLISTE SCLAUCHPAKET PIEZAS DE REPUESTO ANTORCHA	CODICE CODE KODE
11	Guaina guidafilo ø0.6-0.8 3m blu Gaine pour fil ø0.6-0.8 3m bleu Wire guide hose ø0.6-0.8 3m blue Drahtführungsseele ø0.6-0.8 3m blue Vaina guia hilo ø0.6-0.8 3m blue	722437
11	Guaina guidafilo ø1.0-1.2 3m rossa Gaine pour fil ø1.0-1.2 3m rouge Wire guide hose ø1.0-1.2 3m red Drahtführungsseele ø1.0-1.2 3m rot Vaina guia hilo ø1.0-1.2 3m roja	722689

REF.	ELENCO PEZZI RICAMBIO TORCIA LISTE PIECES DETACHEES TORCHE SPARE PARTS LIST TORCH ERSATZTEILLISTE SCLAUCHPAKET PIEZAS DE REPUESTO ANTORCHA	CODICE CODE KODE

ELENCO PEZZI DI RICAMBIO
LISTE PIECES DETACHEES
SPARE PARTS LIST
ERSATZTEILLISTE
PIEZAS DE REPUESTO

MASTERMIG 270/2

TELWIN

Esploso macchina, Dessin appareil, Machine drawing, Explosions Zeichnung des Geräts, Diseño seccionado maquina.

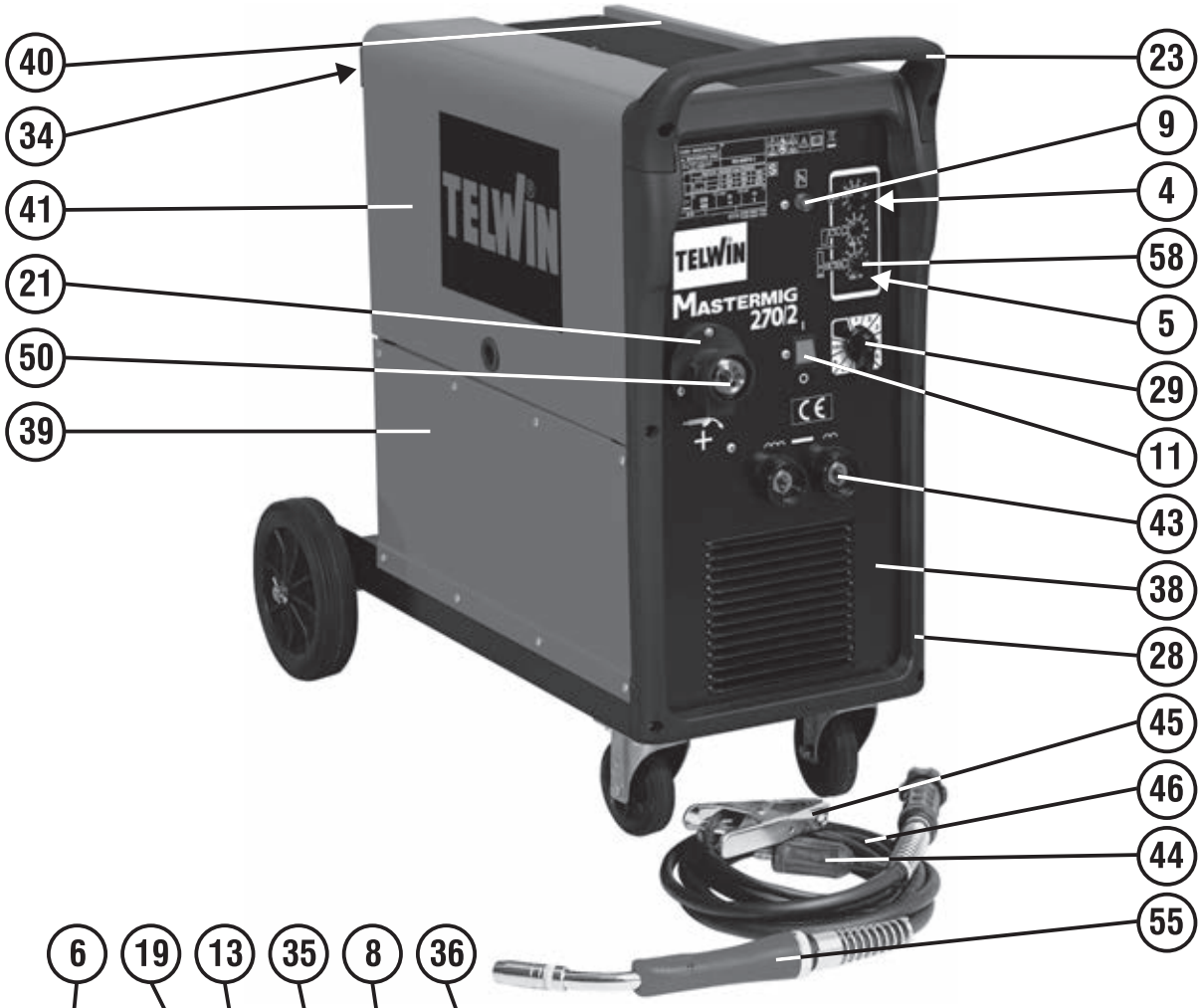

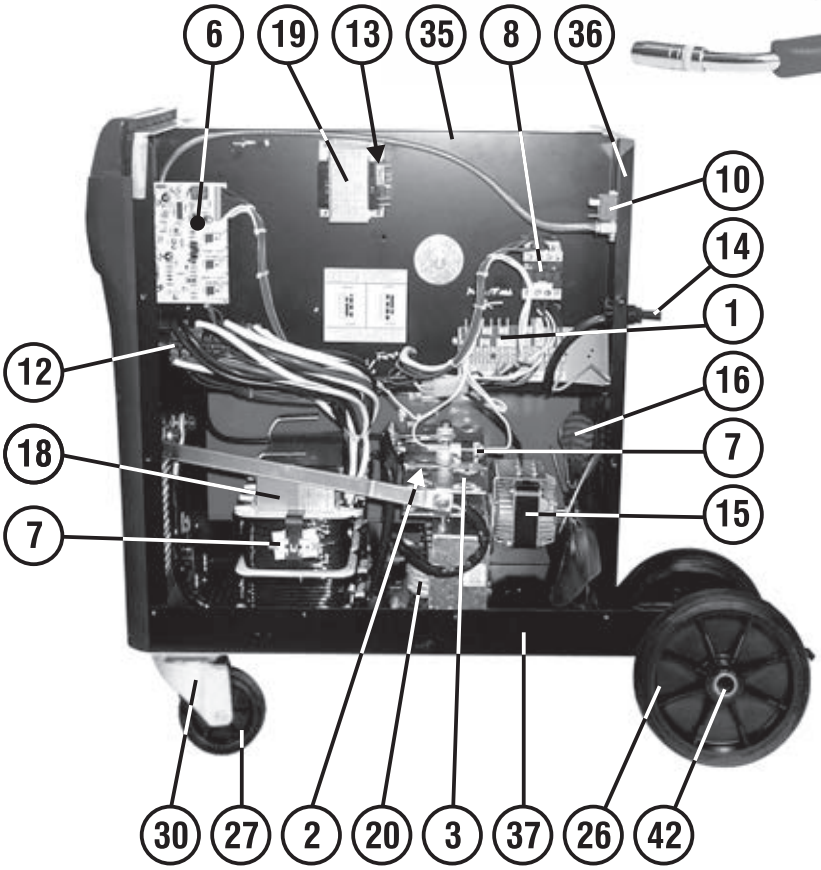

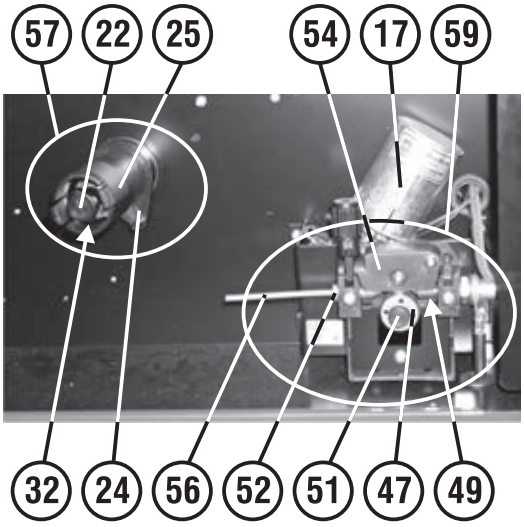

REF.	ELENCO PEZZI DI RICAMBIO PIECES DETACHEES SPARE PARTS LIST ERSATZTEILLISTE PIEZAS DE REPUESTO	CODICE CODE KODE
1	Basetta cambio tensione Platine pour changer tension Changing voltage card Wechselspannungskarte Base cambio tension	112165
2	Protezione raddrizzatore Protection redresseur Rectifier protection Gleichrichterschutz Protector rectificador	112182
3	Raddrizzatore Redresseur Rectifier Gleichrichter Rectificador	112315
4	Potenziometro Potentiometre Potentiometer Potentiometer Potenciometro	116411
5	Potenziometro Potentiometre Potentiometer Potentiometer Potenciometro	113574
6	Kit scheda controllo timer Kit carte controle timer Timer control pcb kit Timer steuerungskarte kit Kit tarjeta control timer	980714
7	Kit termostato Kit thermostat Kit thermostat Thermostat kit Kit termostato	981968
8	Teleruttore Telerupteur Contactor Schuetz Contactor	122459
9	Lampada gialla Temoin lumineaux jaune Yellow pilot lamp Gelbe kontrollampe Piloto amarillo	122594
10	Elettrovalvola Electrovanne Electrovalve Elektroventil Electrovalvula	121801
11	Interruttore Interrupteur Switch Schalter Interruptor	122725
12	Commutatore Commutateur Switch Schalter Interruptor	122827
13	Fusibile Fusible Fuse Sicherung Fusible	122879
14	Cavo alim. 4g2.5 3 M Cable alim. 4g2.5 3 M Mains cable 4g2.5 3 M Netzkabel 4g2.5 3 M Cable alim. 4g2.5 3 M	132039
15	Motore Moteur Motor Motor Motor	152083
16	Ventola Helice Fan blade Fluegelrad Aventador	152113
17	Motore Moteur Motor Motor Motor	153033
18	Trasformatore Transformateur Transformer Transformator Transformador	164087
19	Trasformatore ausiliario Transformateur auxiliaire Auxiliary transformer Hilfstrafo Transformador auxiliar	164991
20	Reattanza Reactance Reactance Drossel Induccion	169370
21	Protezione attacco torcia Support isolant torche Torch connection protection Brennersisolierlager Sosten isolator antorcha	312105
22	Volantino per aspo Volant pour support bobine Reel handwheel Wicklerhandrad Volant por aspa	312137
23	Manico Poignee Handle Handgriff Manija	312328
24	Aspo Support bobine Reel Wickler Aspa	322081
25	Distanziale Entretoise Spacer Abstandstueck Anillo por distanciar	322180
26	Ruota Roue Wheel Rad Rueda	321390
27	Ruota Roue Wheel Rad Rueda	322246
28	Cornice Cadre Frame Rahmen Marco	322698
29	Assieme manopola per commutatore Set poigne pour commutateur Switch knob set Umschaltergriff set Set manjia para conmutador	323101
30	Supporto girevole Support tournant Swivel support Drehbarerhalter Sosten giratorio	422969
31	Adattatore bombola argon it Adaptateur bouteille argon it Argon gas bottle it adaptor Argongasflasche it passtück Adaptador bombona argon it	432036
32	Molla per aspo Ressort pour support bobine Reel spring Wicklerfeder Muelle por aspa	452057
33	Gancio appendi torcia Accrocheur torche Torch hook Haken fuer brenner Gancho fijacion antorcha	644444
34	Staffa per bombola Etrier pour bouteille Bracket for bottle Buegel fuer flasche Estribo para bombona	644606
35	Diaframma Diaphragme Diaphragm Diaphragma Diafragma	645112
36	Retro Partie arriere Back panel Rueckseite Trasera	645113
37	Fondo Chassis Bottom Bodenteil Fondo	645114
38	Frontale Partie frontal Front panel Geraetefront Frontal	649634
39	Fianco Partie lateral Side panel Seitenblech Flanco	651034
40	Kit mantello Kit capot Cover kit Deckelkit Kit panel de cobertura	980872
41	Kit sportello Kit guichet Door kit Tuer kit Kit portezuela	980912
42	Asse per ruote Axe roues Wheels axle Radachse Eje ruedas	681092
43	Presa atlas 50mmq Prise atlas 50mmq Atlas socket 50mmq Atlas steckdose 50mmq Enchufe atlas 50mmq	712036
44	Spina atlas 50mmq Fiche atlas 50mmq Atlas plug 50mmq Atlas stecker 50mmq Enchufe atlas 50mmq	712040
45	Toledo 300 pinza di massa 300a Toledo 300 borne de masse 300a Toledo 300 work clamp 300a Toledo 300 masseklemme 300a Toledo 300 borne de masa 300a	712231
46	Cavo 25mmq 3m-pinza massa-atlas 50mmq Cable 25mmq 3m-pince masse-atlas 50mmq Cable 25mmq 3m-work clamp-atlas 50mmq Kabel 25mmq 3m-massezange-atlas 50mmq Cable 25mmq 3m-pinca masa-atlas 50mmq	713192
47	Rullino traino 2r 0,6fe-0,8fe “f” Galet 2r 0,6fe-0,8fe “f” Feed roll 2r 0,6fe-0,8fe “f” Vorschubrolle 2r 0,6fe-0,8fe “f” Roldana 2r 0,6fe-0,8fe “f”	722112
48	Riduttore pressione 2 manometri 12 l\min Reducteur pression 2 manometres 12 l\min Gas regulator 2 manometers 12 l\min Druckminderer 2 manometer 12 l\min Reductor presion 2 manometros 12 l\min	722119
49	Tubo capillare ø 2x5 Tuyau capillaire ø 2x5 Wire conduit ø 2x5 Kapillarrohr ø 2x5 Tubo capilar ø 2x5	722358
50	Attacco torcia Attelage torche Torch connection Brenneranschluss Enganche soplete	723186
51	Vite bloccarullino Vis ferme galet Rollerfixing screw Rollerhalterschraube Tornillo bloque roldana	742397
52	Entrata guidafilo Entree guide fil Wire guide inlet Drahtfuehrungsseeleeingang Entrata vaina guiadera alambre	742064
53	Rullino traino 2r 0,8al-1,0al “f” Galet 2r 0,8al-1,0al “f” Feed roll 2r 0,8al-1,0al “f” Vorschubrolle 2r 0,8al-1,0al “f” Roldana 2r 0,8al-1,0al “f”	742090
54	Ancora controrullino Ancre contre-galet Anchor for pressure roller Anker für gegenrolle Ancora para contra roldana	742096
55	Mt25 torcia mig 3m Mt25 torche mig 3m Mt25 mig torch 3m Mt25 mig brenner 3m Mt25 antorcha mig 3m	742183
56	Kit guaina entrata motore Kit gaine entree moteur Gas hose kit Drahtfuehrungsseelekit Kit vaina guiadera alambre	990097
57	Kit aspo Kit support bobine Reel kit Wickler kit Kit aspa	990264
58	Manopola Poignee Knob Griff Manija	121395
59	Kit traino due rulli Kit devidoir 2 roleaux Kit 2 rolls wirefeeder Kit 2 raeder drahtvorschub Kit alimentador de hilo 2 rollos	990632

Schema elettrico, Schéma électrique, Diagram, Schaltplan, Esquema de conexiones.

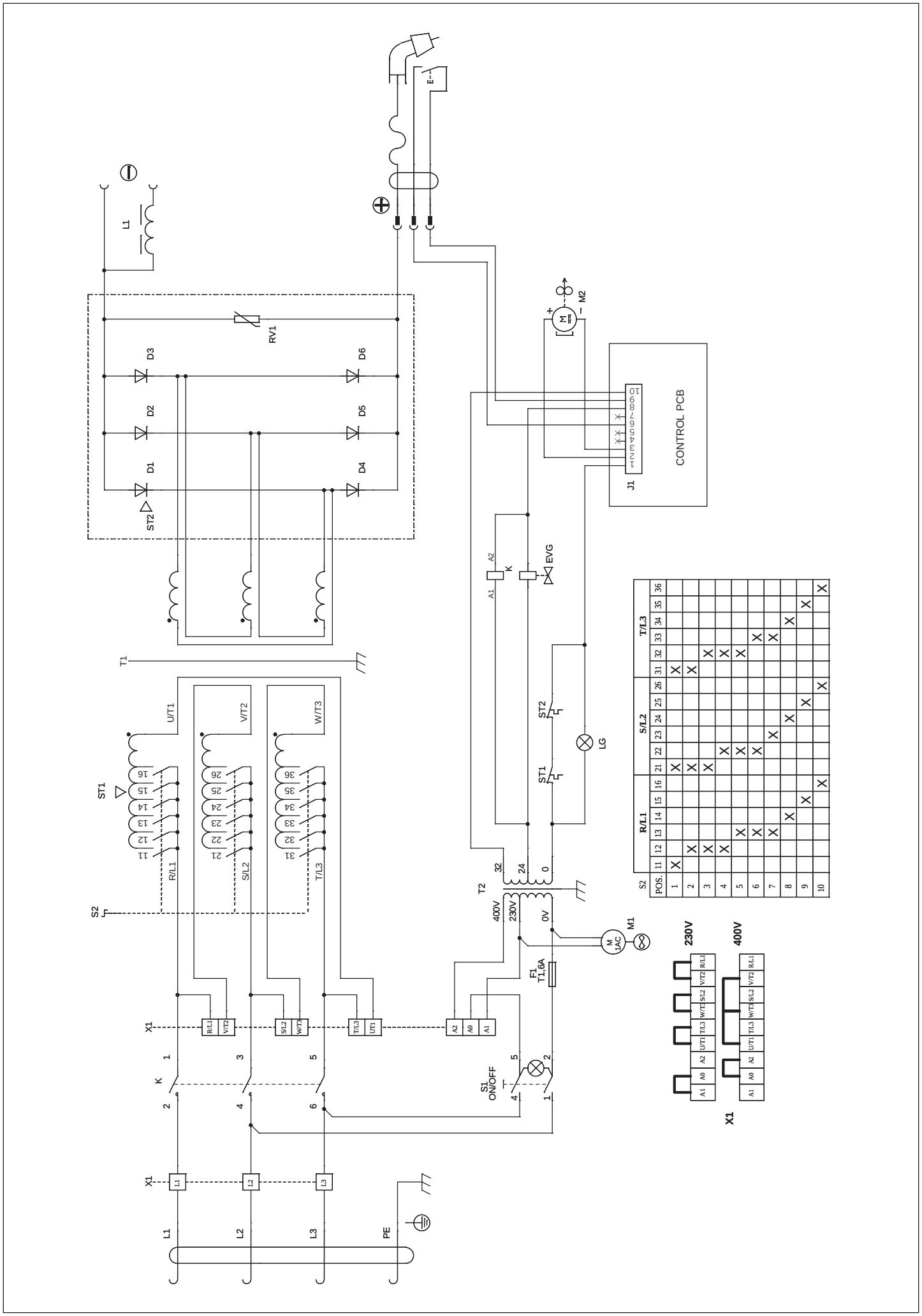

Esploso torcia, Dessin torche, Torch drawing, Schlauchpaket - Explosionszeichnung, Diseño seccionado antorcha.

742183 3m
742184 4m
742185 5m

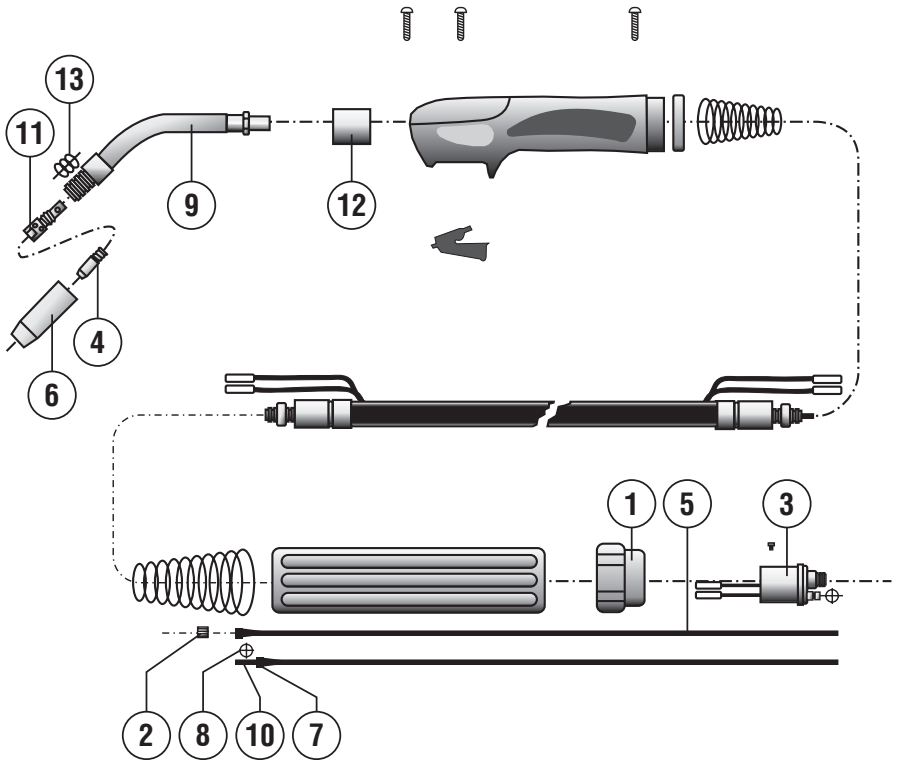

REF.	ELENCO PEZZI RICAMBIO TORCIA LISTE PIECES DETACHEES TORCHE SPARE PARTS LIST TORCH ERSATZTEILLISTE SCLAUCHPAKET PIEZAS DE REPUESTO ANTORCHA	CODICE CODE KODE
1	Ghiera fissaggio Embout fixage Ring nut Nutmutter Virola por fiyacion	722007
2	Dado fissaggio guaina Ecrou fixage gaine Liner nut Befestigungsmutter Dado por fiyacion vaina	722013
3	Corpo torcia Corp de torche Torch assy Brennerskörper Enganche antorcha	722441
4	Tubetto di contatto d. 1,2 Mm fe Tube contact d. 1,2 Mm fe Contact tip d. 1,2 Mm fe Kontaktdüse d. 1,2 Mm fe Tubito de contacto d. 1,2 Mm fe	722682
4	Tubetto di contatto d. 1 Mm fe m6 l=28mm Tube contact d. 1 Mm fe m6 l=28mm Contact tip d. 1 Mm fe m6 l=28mm Kontaktdüse d. 1 Mm fe m6 l=28mm Tubito de contacto d. 1 Mm fe m6 l=28mm	722681
4	Tubetto di contatto d. 0,8 Mm m6 Tube contact d. 0,8 Mm m6 Contact tip d. 0,8 Mm m6 Kontaktdüse d. 0,8 Mm m6 Tubito de contacto d. 0,8 Mm m6	722680
4	Tubetto di contatto d. 1,2 Mm al/flux m6 Tube contact d. 1,2 Mm al/flux m6 Contact tip d. 1,2 Mm al/flux m6 Kontaktdüse d. 1,2 Mm al/flux m6 Tubito de contacto d. 1,2 Mm al/flux m6	722553
4	Tubetto di contatto d. 1 Mm al/flux m6 Tube contact d. 1 Mm al/flux m6 Contact tip d. 1 Mm al/flux m6 Kontaktdüse d. 1 Mm al/flux m6 Tubito de contacto d. 1 Mm al/flux m6	722552
4	Tubetto di contatto d. 0,6 Mm fe Tube contact d. 0,6 Mm fe Contact tip d. 0,6 Mm fe Kontaktdüse d. 0,6 Mm fe Tubito de contacto d. 0,6 Mm fe	722415
5	Guaina guidafilo ø0.6-0.8 3m blu Gaine pour fil ø0.6-0.8 3m bleu Wire guide hose ø0.6-0.8 3m blue Drahtführungsseele ø0.6-0.8 3m blue Vaina guia hilo ø0.6-0.8 3m blue	722437
5	Guaina guidafilo ø1.0-1.2 3m rossa Gaine pour fil ø1.0-1.2 3m rouge Wire guide hose ø1.0-1.2 3m red Drahtführungsseele ø1.0-1.2 3m rot Vaina guia hilo ø1.0-1.2 3m roja	722689
5	Guaina guidafilo ø1.0-1.2 4m al Gaine pour fil ø 1.0-1.2 4m al Wire guide hose ø 1.0-1.2 4m al Drahtführungsseele ø 1.0-1.2 4m al Vaina guia hilo ø 1.0-1.2 4m al	742984

REF.	ELENCO PEZZI RICAMBIO TORCIA LISTE PIECES DETACHEES TORCHE SPARE PARTS LIST TORCH ERSATZTEILLISTE SCLAUCHPAKET PIEZAS DE REPUESTO ANTORCHA	CODICE CODE KODE
6	Ugello cilindrico mt25 Buse cylindrique mt25 Cylindrical nozzle mt25 Zylindrische düse mt25 Inyector cilindrico mt25	722684
6	Ugello conico mt25 Buse conique mt25 Conical nozzle mt25 Konische düse mt25 Inyector conico mt25	722685
6	Ugello testa fine mt25 Buse a tete fine mt25 Thin headed nozzle mt25 Verengte düse mt25 Inyector cabeza fina mt25	722686
6	Ugello per puntatura d. 18 Mm Buse pointage d. 18 Mm Spot welding nozzle d. 18 Mm Punktschweissgasdüse d. 18 Mm Inyector por puntos d. 18 Mm	722687
7	Nipples ferma guaina Nipples serre gaine Wire guide locking nipples Drahtseeleklemmnipples Nipples de bloqueo vaina	722598
8	Anello or Bague or Or ring Or ring Anillo or	722601
8	Anello or Anneau or Or ring Or ring Anillo or	722606
9	Lancia mt25 Lance mt25 Swan neck mt25 Brennerhals mt25 Encorvado mt25	722696
10	Tubetto ferma guaina Tuyau serre gaine Wire guide locking tube Drahtseeleklemmrohr Tubito de bloqueo vaina	722600
11	Diffusore gas mt25 Diffuseur gaz mt25 Gas diffuser mt25 Gasdiffusor mt25 Diffusor gas mt25	722688
12	Isolante corpo torcia Isolant corps de torche Torch connection insulation Brenneranschlussblock isolierteil Aislador cuerpo de antorcha	722693
13	Molla per ugello mt25 Ressort pour buse mt25 Nozzle spring mt25 Düsenfeder mt25 Muelle por inyector mt25	722690

REF.	ELENCO PEZZI RICAMBIO TORCIA LISTE PIECES DETACHEES TORCHE SPARE PARTS LIST TORCH ERSATZTEILLISTE SCLAUCHPAKET PIEZAS DE REPUESTO ANTORCHA	CODICE CODE KODE

ELENCO PEZZI DI RICAMBIO
LISTE PIECES DETACHEES
SPARE PARTS LIST
ERSATZTEILLISTE
PIEZAS DE REPUESTO

MASTERMIG 300

TELWIN®

Esploso macchina, Dessin appareil, Machine drawing, Explosions Zeichnung des Geräts, Diseño seccionado maquina.



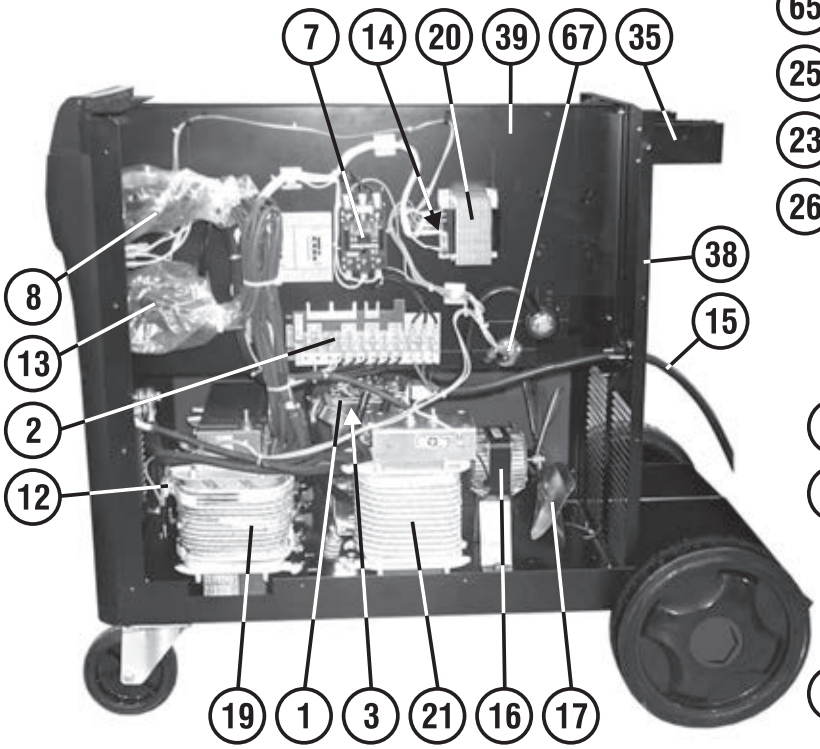

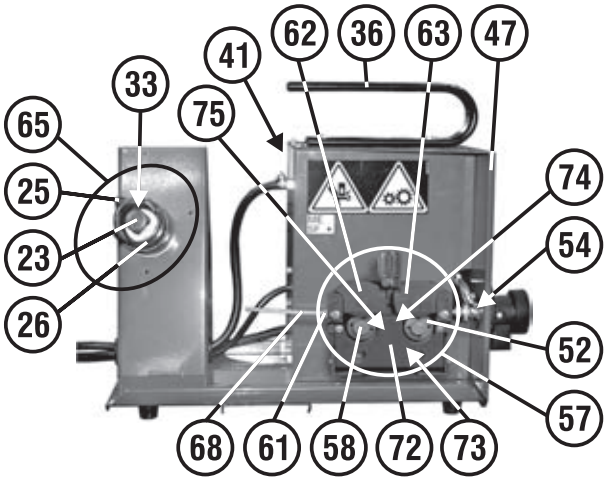

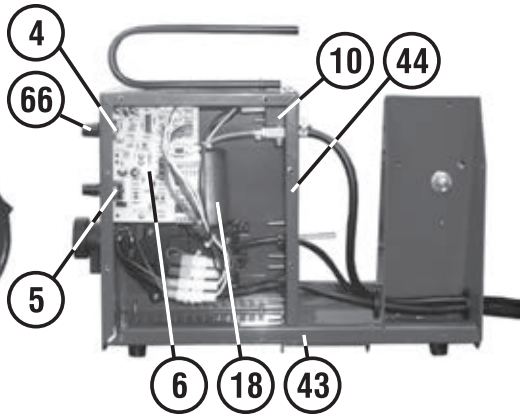

REF.	ELENCO PEZZI DI RICAMBIO PIECES DETACHEES SPARE PARTS LIST ERSATZTEILLISTE PIEZAS DE REPUESTO	CODICE CODE KODE
1	Raddrizzatore Redresseur Rectifier Gleichrichter Rectificador	112170
2	Basetta cambio tensione Platine pour changer tension Changing voltage card Wechselspannungskarte Base cambio tension	112165
3	Protezione raddrizzatore Protection redresseur Rectifier protection Gleichrichterschutz Protector rectificador	112182
4	Potenziometro Potentiometre Potentiometer Potentiometer Potenciometro	116411
5	Potenziometro Potentiometre Potentiometer Potentiometer Potenciometro	113574
6	Kit scheda controllo timer Kit carte controle timer Timer control pcb kit Timer steuerungskarte kit Kit tarjeta control timer	980714
7	Teleruttore Telerupteur Contactor Fernschalter Contactor	122585
8	Commutatore Commutateur Switch Schalter Conmutador	122517
9	Lampada gialla Temoin lumineaux jaune Yellow pilot lamp Gelbe kontrollampe Piloto amarillo	122594
10	Elettrovalvola Electrovanne Electrovalve Elektroventil Electrovalvula	121801
11	Interruttore Interrupteur Switch Schalter Interruptor	122725
12	Termostato Thermostat Thermostat Thermostat Termostato	121713
13	Commutatore Commutateur Switch Schalter Conmutador	122802
14	Fusibile Fusible Fuse Sicherung Fusible	122879
15	Cavo alim. 4g2.5 2 M Cable alim. 4g2.5 2 M Mains cable 4g2.5 2 M Netzkabel 4g2.5 2 M Cable alim. 4g2.5 2 M	132244
16	Motore Moteur Motor Motor Motor	152083
17	Ventola Helice Fan blade Fluegelrad Aventador	152113
18	Motore Moteur Motor Motor Motor	153033
19	Trasformatore Transformateur Transformer Transformator Transformador	164089
20	Trasformatore ausiliario Transformateur auxiliaire Auxiliary transformer Hilfstrafo Transformador auxiliar	164991
21	Reattanza Reactance Reactance Drossel Induccion	169339

REF.	ELENCO PEZZI DI RICAMBIO PIECES DETACHEES SPARE PARTS LIST ERSATZTEILLISTE PIEZAS DE REPUESTO	CODICE CODE KODE
22	Protezione attacco torcia Support isolant torche Torch connection protection Brennersisolierlager Sosten isolator antorcha	312105
23	Volantino per aspo Volant pour support bobine Reel handwheel Wicklerhandrad Volant por aspa	312137
24	Kit manico Kit poignee Handle kit Handgriff kit Kit manija	980082
25	Aspo Support bobine Reel Wickler Aspa	322081
26	Distanziale Entretoise Spacer Abstandstueck Anillo por distanciar	322180
27	Ruota girevole Roue tournante Swivel wheel Bewegliches rad Rueda giratoria	322194
28	Ruota Roue Wheel Rad Rueda	321389
29	Cornice Cadre Frame Rahmen Marco	322736
30	Assieme manopola per commutatore Set poigne pour commutateur Switch knob set Umschaltergriff set Set manjia para conmutador	323101
31	Asse ruote Axe roues Wheels axle Radachse Eje ruedas	422020
32	Adattatore bombola argon it Adaptateur bouteille argon it Argon gas bottle it adaptor Argongasflasche it passtück Adaptador bombona argon it	432036
33	Molla per aspo Ressort pour support bobine Reel spring Wicklerfeder Muelle por aspa	452057
34	Gancio appendi torcia Accrocheur torche Torch hook Haken fuer brenner Gancho fijacion antorcha	644444
35	Portabombola Porte-bouteille Bottle holder Flaschenhalter Apoyo bombona	644447
36	Manico trainafilo Poignee por devidoir Wire feed handle Drahtvorschubhandgriff Manija por arrastre hilo	644449
37	Fondo Chassis Bottom Bodenteil Fondo	645102
38	Retro Partie arriere Back panel Rueckseite Trasera	645103
39	Diaframma Diaphragme Diaphragm Diaphragma Diafragma	645105
40	Frontale Partie frontal Front panel Geraetefront Frontal	649768
41	Fianco Partie lateral Side panel Seitenblech Flanco	645236
42	Fianco Partie lateral Side panel Seitenblech Flanco	651059

REF.	ELENCO PEZZI DI RICAMBIO PIECES DETACHEES SPARE PARTS LIST ERSATZTEILLISTE PIEZAS DE REPUESTO	CODICE CODE KODE
43	Fondo Chassis Bottom Bodenteil Fondo	645235
44	Retro Partie arriere Back panel Rueckseite Trasera	645419
45	Kit sportello Kit guichet Door kit Tuer kit Kit portezuela	980918
46	Kit mantello Kit capot Cover kit Deckelkit Kit panel de cobertura	980866
47	Frontale Partie frontal Front panel Geraetefront Frontal	649829
48	Toledo 300 pinza di massa 300a Toledo 300 borne de masse 300a Toledo 300 work clamp 300a Toledo 300 masseklemme 300a Toledo 300 borne de masa 300a	712231
49	Presa atlas 50mmq Prise atlas 50mmq Atlas socket 50mmq Atlas steckdose 50mmq Enchufe atlas 50mmq	712036
50	Spina atlas 50mmq Fiche atlas 50mmq Atlas plug 50mmq Atlas stecker 50mmq Enchufe atlas 50mmq	712040
51	Rullino traino 4r ø0.6fe-0.8/0.9fe "p-k" Galet 4r ø 0.6fe-0.8/0.9fe "p-k" Feed roll 4r ø 0.6fe-0.8/0.9fe "p-k" Vorschubrolle 4r ø 0.6fe-0.8/0.9fe "p-k" Roldana 4r ø 0.6fe-0.8/0.9fe "p-k"	742576
52	Rullino traino 4r ø 0.8fe-1.0fe "p-k" Galet 4r ø 0.8fe-1.0fe "p-k" Feed roll 4r ø 0.8fe-1.0fe "p-k" Vorschubrolle 4r ø 0.8fe-1.0fe "p-k" Roldana 4r ø 0.8fe-1.0fe "p-k"	722227
53	Riduttore pressione 2 manometri 12 l\min Reducteur pression 2 manometres 12 l\min Gas regulator 2 manometers 12 l\min Druckminderer 2 manometer 12 l\min Reductor presion 2 manometros 12 l\min	722119
54	Tubo capillare ø 2x5 Tuyau capillaire ø 2x5 Wire conduit ø 2x5 Kapillarrohr ø 2x5 Tubo capilar ø 2x5	742365
55	Attacco torcia Attelage torche Torch connection Brenneranschluss Enganche soplete	723229
56	Cavo 25mmq 3m-pinza massa-atlas 50mmq Cable 25mmq 3m-pince masse-atlas 50mmq Cable 25mmq 3m-work clamp-atlas 50mmq Kabel 25mmq 3m-massezange-atlas 50mmq Cable 25mmq 3m-pinca masa-atlas 50mmq	713192
57	Traino 4 rulli Devidoir 4 rouleaux 4 Roll wirefeeder 4 Räder drahtvorschub Alimendator de hilo 4 rodillos	981928
58	Vite bloccarullino Vis ferme galet Rollerfixing screw Rollerhalterschraube Tornillo bloque roldana	742397
59	Mt25 torcia mig 3m Mt25 torche mig 3m Mt25 mig torch 3m Mt25 mig brenner 3m Mt25 antorcha mig 3m	742183
60	Rullino traino 4r ø 0.8al-1.0al "p-k" Galet 4r ø 0.8al-1.0al "p-k" Feed roll 4r ø 0.8al-1.0al "p-k" Vorschubrolle 4r ø 0.8al-1.0al "p-k" Roldana 4r ø 0.8al-1.0al "p-k"	742304
61	Entrata guidafilo Entree guide fil Wire guide inlet Drahtfuehrungsseeleeingang Entrata vaina guiadera alambre	742064
62	Ancora controrullino sinistra Ancre contre-galet gauche Left anchor for pressure roller Linker anker für gegenrolle Ancora izquierda para contra roldana	981929
63	Ancora controrullino destra Ancre contre-galet droit Right anchor for pressure roller Rechter anker für gegenrolle Ancora derecha para contra roldana	981930

REF.	ELENCO PEZZI DI RICAMBIO PIECES DETACHEES SPARE PARTS LIST ERSATZTEILLISTE PIEZAS DE REPUESTO	CODICE CODE KODE
64	Kit spina 8 poli Kit fiche 8 contacts 8 Pin plug kit 8 Pin steckerkit Kit enchufe 8 contactos	990226
65	Kit aspo Kit support bobine Reel kit Wickler kit Kit aspa	990264
66	Kit manopola Kit poignee Switch knob kit Schaltergriff kit Kit manija	990328
67	Kit presa Kit prise Socket kit Steckdosekit Kit tomacorriente	990330
68	Kit guaina entrata motore Kit gaine entree moteur Gas hose kit Drahtfuehrungsseelekit Kit vaina guiadera alambre	990097

REF.	ELENCO PEZZI DI RICAMBIO PIECES DETACHEES SPARE PARTS LIST ERSATZTEILLISTE PIEZAS DE REPUESTO	CODICE CODE KODE
70	Rullino traino 4r ø 1.2fe-1.6fe "p-k" Galet 4r ø 1.2fe-1.6fe "p-k" Feed roll 4r ø 1.2fe-1.6fe "p-k" Vorschubrolle 4r ø 1.2fe-1.6fe "p-k" Roldana 4r ø 1.2fe-1.6fe "p-k"	722241
71	Rullino traino 4r ø 1.0fe-1.2fe "p-k" Galet 4r ø 1.0fe-1.2fe "p-k" Feed roll 4r ø 1.0fe-1.2fe "p-k" Vorschubrolle 4r ø 1.0fe-1.2fe "p-k" Roldana 4r ø 1.0fe-1.2fe "p-k"	742366
72	Protezione Protecion Cover Deckel Proteccion	322814
73	Adattatore Adapteur Adapter Zahnrad Adaptador	742166
74	Ingranaggio motore Engrenage motor Motor drive gear Motorszahnrad Engranaje motor	742348

REF.	ELENCO PEZZI DI RICAMBIO PIECES DETACHEES SPARE PARTS LIST ERSATZTEILLISTE PIEZAS DE REPUESTO	CODICE CODE KODE
75	Ingranaggio Engrenages Gears Zahnrad Engranaje	742590

Schema elettrico, Schéma électrique, Diagram, Schaltplan, Esquema de conexiones.

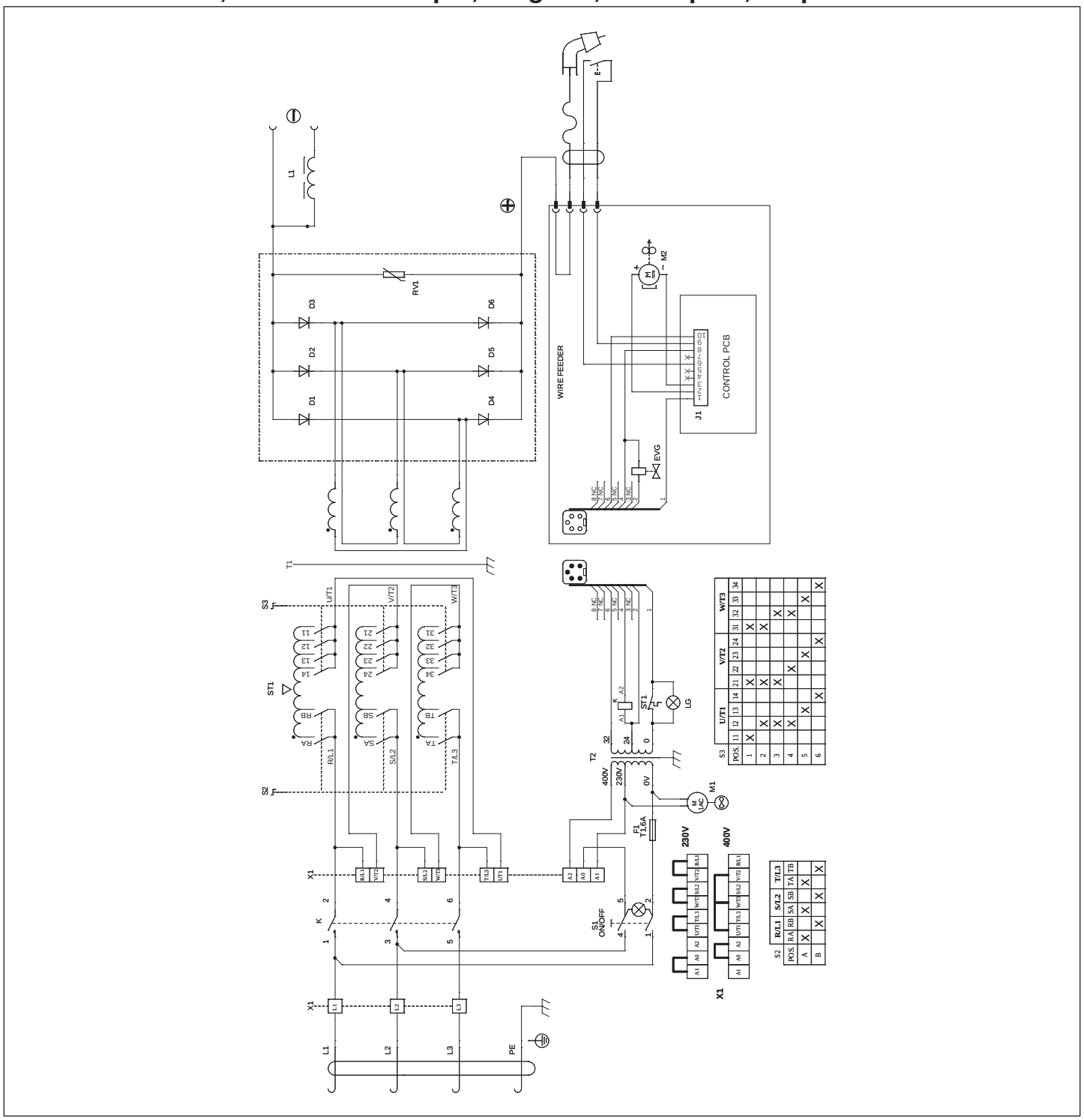

Esploso torcia, Dessin torche, Torch drawing, Schlauchpaket - Explosionszeichnung, Diseño seccionado antorcha.

742183 3m
742184 4m
742185 5m

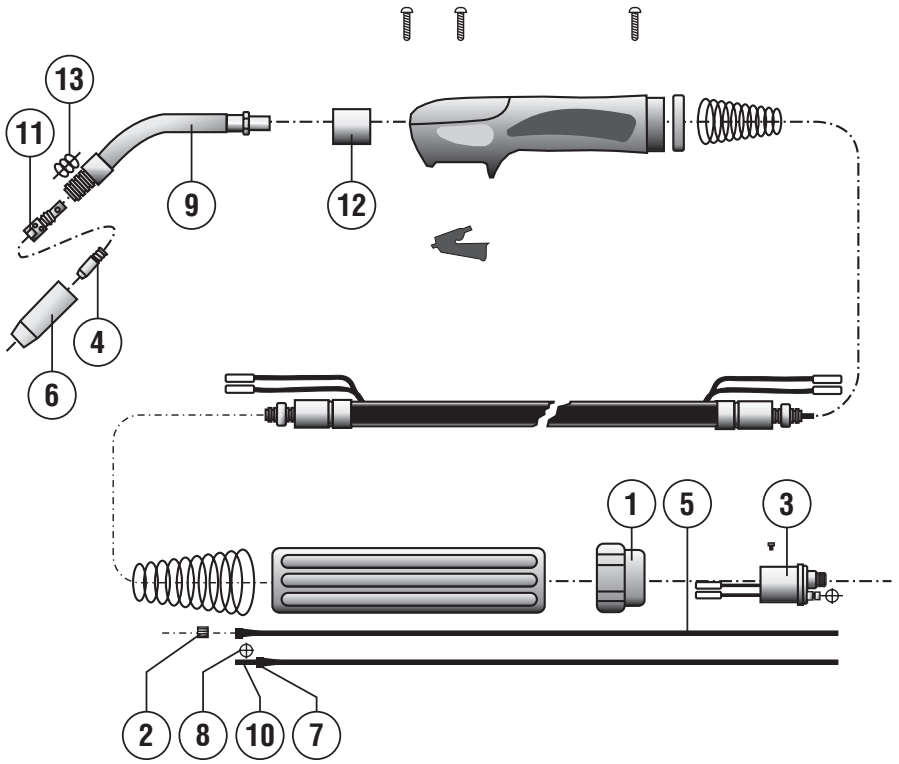

REF.	ELENCO PEZZI RICAMBIO TORCIA LISTE PIECES DETACHEES TORCHE SPARE PARTS LIST TORCH ERSATZTEILLISTE SCLAUCHPAKET PIEZAS DE REPUESTO ANTORCHA	CODICE CODE KODE
1	Ghiera fissaggio Embout fixage Ring nut Nutmutter Virola por fiyacion	722007
2	Dado fissaggio guaina Ecrou fixage gaine Liner nut Befestigungsmutter Dado por fiyacion vaina	722013
3	Corpo torcia Corp de torche Torch assy Brennerskörper Enganche antorcha	722441
4	Tubetto di contatto d. 1,2 Mm fe Tube contact d. 1,2 Mm fe Contact tip d. 1,2 Mm fe Kontaktdüse d. 1,2 Mm fe Tubito de contacto d. 1,2 Mm fe	722682
4	Tubetto di contatto d. 1 Mm fe m6 l=28mm Tube contact d. 1 Mm fe m6 l=28mm Contact tip d. 1 Mm fe m6 l=28mm Kontaktdüse d. 1 Mm fe m6 l=28mm Tubito de contacto d. 1 Mm fe m6 l=28mm	722681
4	Tubetto di contatto d. 0,8 Mm m6 Tube contact d. 0,8 Mm m6 Contact tip d. 0,8 Mm m6 Kontaktdüse d. 0,8 Mm m6 Tubito de contacto d. 0,8 Mm m6	722680
4	Tubetto di contatto d. 1,2 Mm al/flux m6 Tube contact d. 1,2 Mm al/flux m6 Contact tip d. 1,2 Mm al/flux m6 Kontaktdüse d. 1,2 Mm al/flux m6 Tubito de contacto d. 1,2 Mm al/flux m6	722553
4	Tubetto di contatto d. 1 Mm al/flux m6 Tube contact d. 1 Mm al/flux m6 Contact tip d. 1 Mm al/flux m6 Kontaktdüse d. 1 Mm al/flux m6 Tubito de contacto d. 1 Mm al/flux m6	722552
4	Tubetto di contatto d. 0,6 Mm fe Tube contact d. 0,6 Mm fe Contact tip d. 0,6 Mm fe Kontaktdüse d. 0,6 Mm fe Tubito de contacto d. 0,6 Mm fe	722415
5	Guaina guidafilo ø0.6-0.8 3m blu Gaine pour fil ø0.6-0.8 3m bleu Wire guide hose ø0.6-0.8 3m blue Drahtführungsseele ø0.6-0.8 3m blue Vaina guia hilo ø0.6-0.8 3m blue	722437
5	Guaina guidafilo ø1.0-1.2 3m rossa Gaine pour fil ø1.0-1.2 3m rouge Wire guide hose ø1.0-1.2 3m red Drahtführungsseele ø1.0-1.2 3m rot Vaina guia hilo ø1.0-1.2 3m roja	722689
5	Guaina guidafilo ø1.0-1.2 4m al Gaine pour fil ø 1.0-1.2 4m al Wire guide hose ø 1.0-1.2 4m al Drahtführungsseele ø 1.0-1.2 4m al Vaina guia hilo ø 1.0-1.2 4m al	742984

REF.	ELENCO PEZZI RICAMBIO TORCIA LISTE PIECES DETACHEES TORCHE SPARE PARTS LIST TORCH ERSATZTEILLISTE SCLAUCHPAKET PIEZAS DE REPUESTO ANTORCHA	CODICE CODE KODE
6	Ugello cilindrico mt25 Buse cylindrique mt25 Cylindrical nozzle mt25 Zylindrische düse mt25 Inyector cilindrico mt25	722684
6	Ugello conico mt25 Buse conique mt25 Conical nozzle mt25 Konische düse mt25 Inyector conico mt25	722685
6	Ugello testa fine mt25 Buse a tete fine mt25 Thin headed nozzle mt25 Verengte düse mt25 Inyector cabeza fina mt25	722686
6	Ugello per puntatura d. 18 Mm Buse pointage d. 18 Mm Spot welding nozzle d. 18 Mm Punktschweissgasdüse d. 18 Mm Inyector por puntos d. 18 Mm	722687
7	Nipples ferma guaina Nipples serre gaine Wire guide locking nipples Drahtseeleklemmnipples Nipples de bloqueo vaina	722598
8	Anello or Bague or Or ring Or ring Anillo or	722601
8	Anello or Anneau or Or ring Or ring Anillo or	722606
9	Lancia mt25 Lance mt25 Swan neck mt25 Brennerhals mt25 Encorvado mt25	722696
10	Tubetto ferma guaina Tuyau serre gaine Wire guide locking tube Drahtseeleklemmrohr Tubito de bloqueo vaina	722600
11	Diffusore gas mt25 Diffuseur gaz mt25 Gas diffuser mt25 Gasdiffusor mt25 Diffusor gas mt25	722688
12	Isolante corpo torcia Isolant corps de torche Torch connection insulation Brenneranschlussblock isolierteil Aislador cuerpo de antorcha	722693
13	Molla per ugello mt25 Ressort pour buse mt25 Nozzle spring mt25 Düsenfeder mt25 Muelle por inyector mt25	722690

REF.	ELENCO PEZZI RICAMBIO TORCIA LISTE PIECES DETACHEES TORCHE SPARE PARTS LIST TORCH ERSATZTEILLISTE SCLAUCHPAKET PIEZAS DE REPUESTO ANTORCHA	CODICE CODE KODE

ELENCO PEZZI DI RICAMBIO
LISTE PIECES DETACHEES
SPARE PARTS LIST
ERSATZTEILLISTE
PIEZAS DE REPUESTO

MASTERMIG 400

Esploso macchina, Dessin appareil, Machine drawing, Explosions Zeichnung des Geräts, Diseño seccionado maquina.



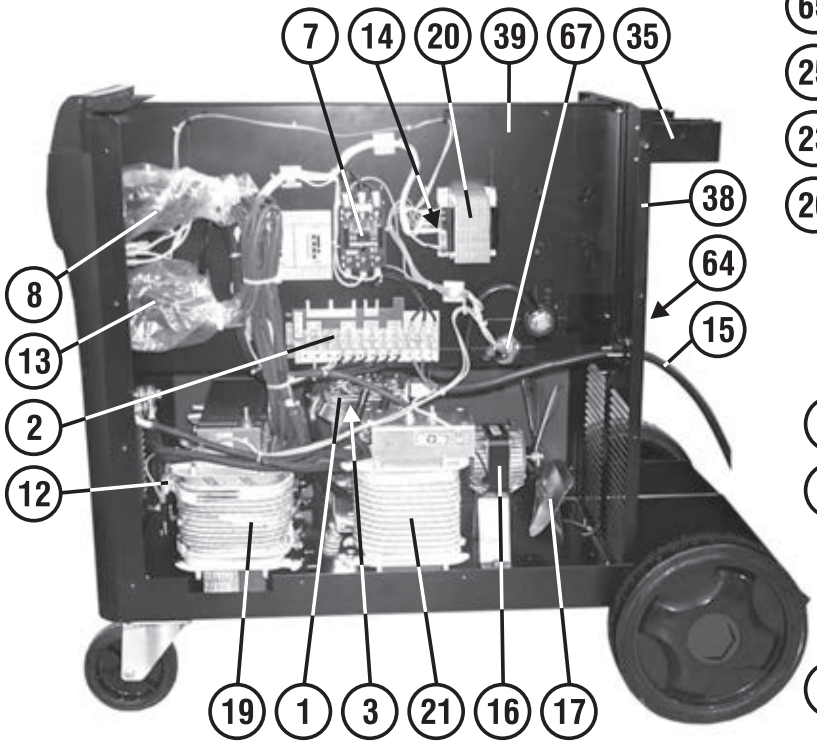

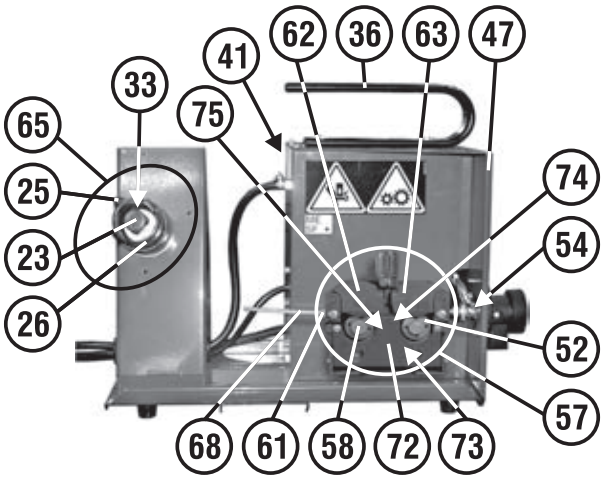

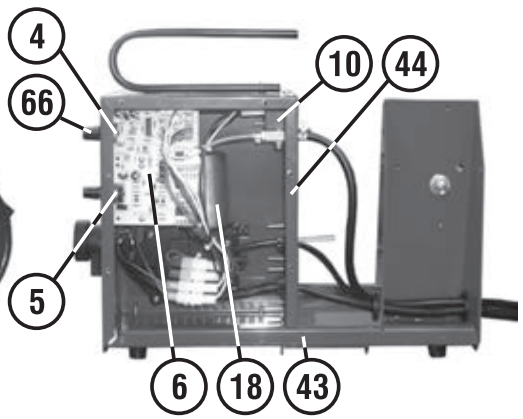

REF.	ELENCO PEZZI DI RICAMBIO PIECES DETACHEES SPARE PARTS LIST ERSATZTEILLISTE PIEZAS DE REPUESTO	CODICE CODE KODE
1	Raddrizzatore Redresseur Rectifier Gleichrichter Rectificador	112131
2	Basetta cambio tensione Platine pour change tension Voltage changing card Wechselspannungkarte Base cambio tension	112163
3	Protezione raddrizzatore Protection redresseur Rectifier protection Gleichrichterschutz Protector rectificador	112182
4	Potenziometro Potentiometre Potentiometer Potentiometer Potenciometro	116411
5	Potenziometro Potentiometre Potentiometer Potentiometer Potenciometro	113574
6	Kit scheda controllo timer Kit carte controle timer Timer control pcb kit Timer steuerungskarte kit Kit tarjeta control timer	980714
7	Contattore Contacteur Contactor Kontaktgeber Contactor	121214
8	Commutatore Commutateur Switch Schalter Conmutador	121514
9	Lampada gialla Temoin lumineaux jaune Yellow pilot lamp Gelbe kontrollampe Piloto amarillo	122594
10	Elettrovalvola Electrovanne Electrovalve Elektroventil Electrovalvula	121801
11	Interruttore Interrupteur Switch Schalter Interruptor	122725
12	Termostato Thermostat Thermostat Thermostat Termostato	121714
13	Commutatore Commutateur Switch Schalter Conmutador	122802
14	Fusibile Fusible Fuse Sicherung Fusible	122879
15	Cavo alim. 4g4 2 m Cable alim. 4g4 2 m Mains cable 4g4 2 m Netzkabel 4g4 2 m Cable alim. 4g4 2 m	132206
16	Motore Moteur Motor Motor Motor	152083
17	Ventola Helice Fan blade Fluegelrad Aventador	152113
18	Motore Moteur Motor Motor Motor	153033
19	Trasformatore Transformateur Transformer Transformator Transformador	164091
20	Trasformatore ausiliario Transformateur auxiliaire Auxiliary transformer Hilfstrafo Transformador auxiliar	164991
21	Reattanza Reactance Reactance Drossel Induccion	169426
22	Protezione attacco torcia Support isolant torche Torch connection protection Brennersisolierlager Sosten isolator antorcha	312105
23	Volantino per aspo Volant pour support bobine Reel handwheel Wicklerhandrad Volant por aspa	312137
24	Kit manico Kit poignee Handle kit Handgriff kit Kit manija	980082
25	Aspo Support bobine Reel Wickler Aspa	322081
26	Distanziale Entretoise Spacer Abstandstueck Anillo por distanciar	322180
27	Ruota girevole Roue tournante Swivel wheel Bewegliches rad Rueda giratoria	322194
28	Ruota Roue Wheel Rad Rueda	321389
29	Cornice Cadre Frame Rahmen Marco	322736
30	Assieme manopola per commutatore Set poigne pour commutateur Switch knob set Umschaltergriff set Set manjia para conmutador	323101
31	Asse ruote Axe roues Wheels axle Radachse Eje ruedas	422020
32	Adattatore bombola argon it Adaptateur bouteille argon it Argon gas bottle it adaptor Argongasflasche it passtück Adaptador bombona argon it	432036
33	Molla per aspo Ressort pour support bobine Reel spring Wicklerfeder Muelle por aspa	452057
34	Gancio appendi torcia Accrocheur torche Torch hook Haken fuer brenner Gancho fijacion antorcha	644444
35	Portabombola Porte-bouteille Bottle holder Flaschenhalter Apoyo bombona	644447
36	Manico trainafilo Poignee por devidoir Wire feed handle Drahtvorschubhandgriff Manija por arrastre hilo	644449
37	Fondo Chassis Bottom Bodenteil Fondo	645102
38	Retro Partie arriere Back panel Rueckseite Trasera	645103
39	Diaframma Diaphragme Diaphragm Diaphragma Diafragma	645105
40	Frontale Partie frontal Front panel Geraetefront Frontal	649769
41	Fianco Partie lateral Side panel Seitenblech Flanco	645236
42	Fianco Partie lateral Side panel Seitenblech Flanco	651059
43	Fondo Chassis Bottom Bodenteil Fondo	645235
44	Retro Partie arriere Back panel Rueckseite Trasera	645419
45	Kit sportello Kit guichet Door kit Tuer kit Kit portezuela	980918
46	Kit mantello Kit capot Cover kit Deckelkit Kit panel de cobertura	980866
47	Frontale Partie frontal Front panel Geraetefront Frontal	649829
48	Toledo 400 pinza di massa 400a Toledo 400 pince de masse 400a Toledo 400 work clamp 400a Toledo 400 masseklemme 400a Toledo 400 pinza de masa 400a	712032
49	Presa atlas 50mmq Prise atlas 50mmq Atlas socket 50mmq Atlas steckdose 50mmq Enchufe atlas 50mmq	712036
50	Spina atlas 50mmq Fiche atlas 50mmq Atlas plug 50mmq Atlas stecker 50mmq Enchufe atlas 50mmq	712040
51	Rullino traino 4r ø0.6fe-0.8/0.9fe "p-k" Galet 4r ø 0.6fe-0.8/0.9fe "p-k" Feed roll 4r ø 0.6fe-0.8/0.9fe "p-k" Vorschubrolle 4r ø 0.6fe-0.8/0.9fe "p-k" Roldana 4r ø 0.6fe-0.8/0.9fe "p-k"	742576
52	Rullino traino 4r ø 0.8fe-1.0fe "p-k" Galet 4r ø 0.8fe-1.0fe "p-k" Feed roll 4r ø 0.8fe-1.0fe "p-k" Vorschubrolle 4r ø 0.8fe-1.0fe "p-k" Roldana 4r ø 0.8fe-1.0fe "p-k"	722227
53	Riduttore pressione 2 manometri 32 l\min Reducteur pression 2 manometres 32 l\min Gas regulator 2 manometers 32 l\min Druckminderer 2 manometer 32 l\min Reductor presion 2 manometros 32 l\min	722346
54	Tubo capillare ø 2x5 Tuyau capillaire ø 2x5 Wire conduit ø 2x5 Kapillarrohr ø 2x5 Tubo capilar ø 2x5	742365
55	Attacco torcia Attelage torche Torch connection Brenneranschluss Enganche soplete	723229
56	Pinza di massa + cavo 35mmq 3m ax50 Pince de masse + cable 35mmq 3m ax50 Work clamp + cable 35mmq 3m ax50 Massezange + kabel 35mmq 3m ax50 Pinca de masa +cable 35mmq 3m pinca ax50	804217
57	Traino 4 rulli Devidoir 4 rouleaux 4 Roll wirefeeder 4 Räder drahtvorschub Alimendator de hilo 4 rodillos	981928
58	Vite bloccarullino Vis ferme galet Rollerfixing screw Rollerhalterschraube Tornillo bloque roldana	742397
59	Mt36 torcia mig 3m Mt36 torche mig 3m Mt36 mig torch 3m Mt36 mig brenner 3m Mt36 antorcha mig 3m	742186
60	Rullino traino 4r ø 0.8al-1.0al "p-k" Galet 4r ø 0.8al-1.0al "p-k" Feed roll 4r ø 0.8al-1.0al "p-k" Vorschubrolle 4r ø 0.8al-1.0al "p-k" Roldana 4r ø 0.8al-1.0al "p-k"	742304
61	Entrata guidafilo Entree guide fil Wire guide inlet Drahtfuehrungsseeleeingang Entrata vaina guiadera alambre	742064
62	Ancora controrullino sinistra Ancre contre-galet gauche Left anchor for pressure roller Linker anker für gegenrolle Ancora izquierda para contra roldana	981929
63	Ancora controrullino destra Ancre contre-galet droit Right anchor for pressure roller Rechter anker für gegenrolle Ancora derecha para contra roldana	981930

REF.	ELENCO PEZZI DI RICAMBIO PIECES DETACHEES SPARE PARTS LIST ERSATZTEILLISTE PIEZAS DE REPUESTO	CODICE CODE KODE
64	Kit spina 8 poli Kit fiche 8 contacts 8 Pin plug kit 8 Pin steckerkit Kit enchufe 8 contactos	990226
65	Kit aspo Kit support bobine Reel kit Wickler kit Kit aspa	990264
66	Kit manopola Kit poignee Switch knob kit Schaltergriff kit Kit manija	990328
67	Kit presa Kit prise Socket kit Steckdosekit Kit tomacorriente	990330
68	Kit guaina entrata motore Kit gaine entree moteur Gas hose kit Drahtfuehrungsseelekit Kit vaina guiadera alambre	990097

REF.	ELENCO PEZZI DI RICAMBIO PIECES DETACHEES SPARE PARTS LIST ERSATZTEILLISTE PIEZAS DE REPUESTO	CODICE CODE KODE
70	Rullino traino 4r ø 1.2fe-1.6fe "p-k" Galet 4r ø 1.2fe-1.6fe "p-k" Feed roll 4r ø 1.2fe-1.6fe "p-k" Vorschubrolle 4r ø 1.2fe-1.6fe "p-k" Roldana 4r ø 1.2fe-1.6fe "p-k"	722241
71	Rullino traino 4r ø 1.0fe-1.2fe "p-k" Galet 4r ø 1.0fe-1.2fe "p-k" Feed roll 4r ø 1.0fe-1.2fe "p-k" Vorschubrolle 4r ø 1.0fe-1.2fe "p-k" Roldana 4r ø 1.0fe-1.2fe "p-k"	742366
72	Protezione Protecion Cover Deckel Proteccion	322814
73	Adattatore Adapteur Adapter Zahnrad Adaptador	742166
74	Ingranaggio motore Engrenage motor Motor drive gear Motorszahnrad Engranaje motor	742348

REF.	ELENCO PEZZI DI RICAMBIO PIECES DETACHEES SPARE PARTS LIST ERSATZTEILLISTE PIEZAS DE REPUESTO	CODICE CODE KODE
75	Ingranaggio Engrenages Gears Zahnrad Engranaje	742590

Schema elettrico, Schéma électrique, Diagram, Schaltplan, Esquema de conexiones.

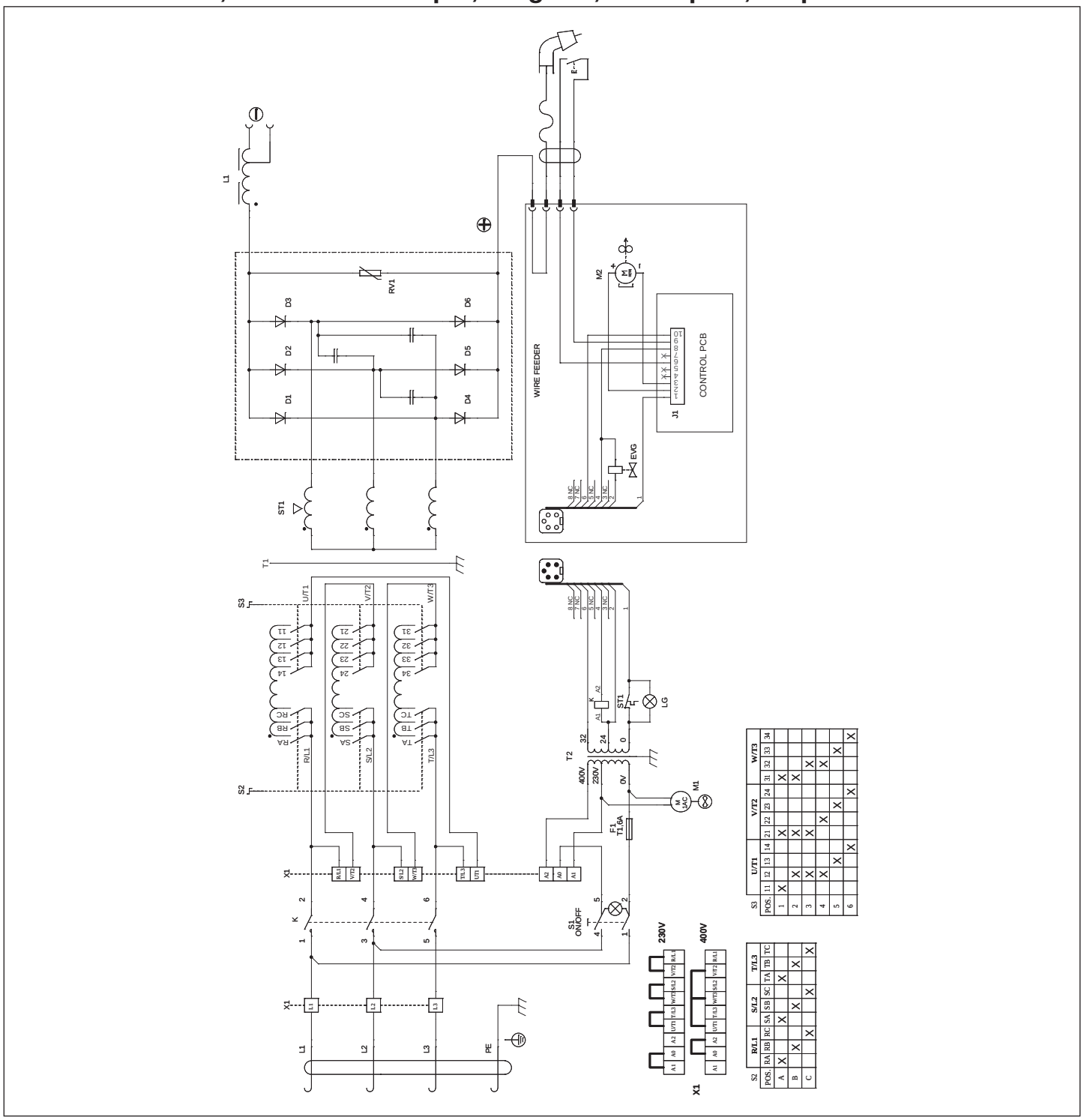

Esploso torcia, Dessin torche, Torch drawing, Schlauchpaket - Explosionszeichnung, Diseño seccionado antorcha.

742186 3m
742187 4m
742188 5m

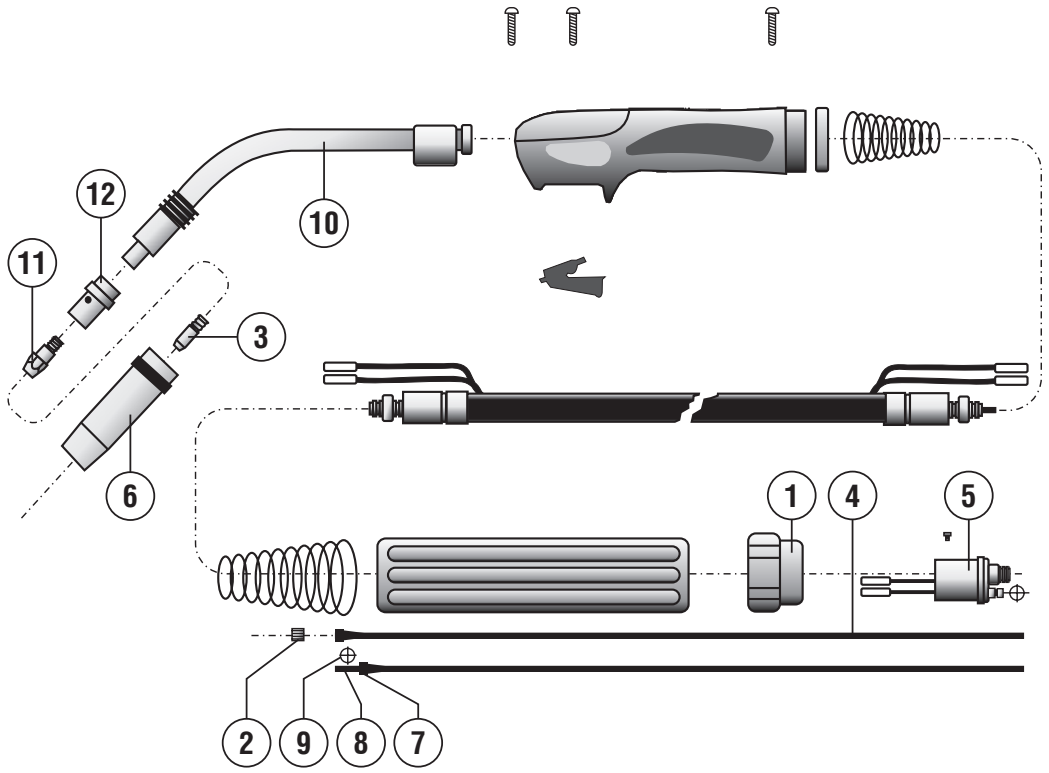

REF.	ELENCO PEZZI RICAMBIO TORCIA LISTE PIECES DETACHEES TORCHE SPARE PARTS LIST TORCH ERSATZTEILLISTE SCLAUCHPAKET PIEZAS DE REPUESTO ANTORCHA	CODICE CODE KODE
1	Ghiera fissaggio Embout fixage Ring nut Nutmutter Virola por fiyacion	722007
2	Dado fissaggio guaina Ecrou fixage gaine Liner nut Befestigungsmutter Dado por fiyacion vaina	722013
3	Tubetto di contatto d. 1,6 Mm al/flux m6 Tube contact d. 1,6 Mm al/flux m6 Contact tip d. 1,6 Mm al/flux m6 Kontaktdüse d. 1,6 Mm al/flux m6 Tubito de contacto d. 1,6 Mm al/flux m6	722818
3	Tubetto di contatto d. 1,6 Mm fe Tube contact d. 1,6 Mm fe Contact tip d. 1,6 Mm fe Kontaktroehrchen d. 1,6 Mm fe Tubito de contacto d. 1,6 Mm fe	722797
3	Tubetto di contatto d. 1,2 Mm fe Tube contact d. 1,2 Mm fe Contact tip d. 1,2 Mm fe Kontaktdüse d. 1,2 Mm fe Tubito de contacto d. 1,2 Mm fe	722682
3	Tubetto di contatto d. 1 Mm fe m6 l=28mm Tube contact d. 1 Mm fe m6 l=28mm Contact tip d. 1 Mm fe m6 l=28mm Kontaktdüse d. 1 Mm fe m6 l=28mm Tubito de contacto d. 1 Mm fe m6 l=28mm	722681
3	Tubetto di contatto d. 0,8 Mm m6 Tube contact d. 0,8 Mm m6 Contact tip d. 0,8 Mm m6 Kontaktdüse d. 0,8 Mm m6 Tubito de contacto d. 0,8 Mm m6	722680
3	Tubetto di contatto d. 1,2 Mm al/flux m6 Tube contact d. 1,2 Mm al/flux m6 Contact tip d. 1,2 Mm al/flux m6 Kontaktdüse d. 1,2 Mm al/flux m6 Tubito de contacto d. 1,2 Mm al/flux m6	722553
3	Tubetto di contatto d. 1 Mm al/flux m6 Tube contact d. 1 Mm al/flux m6 Contact tip d. 1 Mm al/flux m6 Kontaktdüse d. 1 Mm al/flux m6 Tubito de contacto d. 1 Mm al/flux m6	722552
3	Tubetto di contatto d. 0,6 Mm fe Tube contact d. 0,6 Mm fe Contact tip d. 0,6 Mm fe Kontaktdüse d. 0,6 Mm fe Tubito de contacto d. 0,6 Mm fe	722415
4	Guaina guidafilo ø1.0-1.2 3m rossa Gaine pour fil ø1.0-1.2 3m rouge Wire guide hose ø1.0-1.2 3m red Drahtführungsseele ø1.0-1.2 3m rot Vaina guia hilo ø1.0-1.2 3m roja	722689
4	Guaina guidafilo ø0.6-0.8 3m blu Gaine pour fil ø0.6-0.8 3m bleu Wire guide hose ø0.6-0.8 3m blue Drahtführungsseele ø0.6-0.8 3m blue Vaina guia hilo ø0.6-0.8 3m blue	722437

REF.	ELENCO PEZZI RICAMBIO TORCIA LISTE PIECES DETACHEES TORCHE SPARE PARTS LIST TORCH ERSATZTEILLISTE SCLAUCHPAKET PIEZAS DE REPUESTO ANTORCHA	CODICE CODE KODE
4	Guaina guidafilo ø1.2-1.6 4m al Gaine pour fil ø1.2-1.6 4m al Wire guide hose ø1.2-1.6 4m al Drahtführungsseele ø1.2-1.6 4m al Vaina guia hilo ø1.2-1.6 4m al	742811
4	Guaina guidaf. Ø1.0-1.2 4m al Gaine pour fil ø1.0-1.2 4m al Wire guide hose ø1.0-1.2 4m al Drahtführungsseele ø1.0-1.2 4m al Vaina guia hilo ø1.0-1.2 4m al	742812
5	Corpo torcia Corp de torche Torch assy Brennerskörper Enganche antorcha	722441
6	Ugello conico mt36 Buse conique mt36 Conical nozzle mt36 Konische düse mt36 Inyector conico mt36	722792
6	Ugello testa fine mt36 Buse a tete fine mt36 Thin headed nozzle mt36 Verengte düse mt36 Inyector cabeza fina mt36	722793
6	Ugello puntatura Buse pour pointage Spot welding nozzle Punktschweissdüse Inyector por puntos	722794
7	Nipples ferma guaina Nipples serre gaine Wire guide locking nipples Drahtseeleklemmnipples Nipples de bloqueo vaina	722598
7	Nipples ferma guaina Nipples serre gaine Wire guide locking nipples Drahtseeleklemmnipples Nipples de bloqueo vaina	722599
8	Tubetto ferma guaina Tuyau serre gaine Wire guide locking tube Drahtseeleklemmrohr Tubito de bloqueo vaina	722600
9	Anello or Bague or Or ring Or ring Anillo or	722601
9	Anello or Anneau or Or ring Or ring Anillo or	722606
10	Lancia mt36 Lance mt36 Swan neck mt36 Brennerhals mt36 Encorvado mt36	722788

REF.	ELENCO PEZZI RICAMBIO TORCIA LISTE PIECES DETACHEES TORCHE SPARE PARTS LIST TORCH ERSATZTEILLISTE SCLAUCHPAKET PIEZAS DE REPUESTO ANTORCHA	CODICE CODE KODE
11	Supporto tubetto contatto mt36 Support tube contact mt36 Contact tip holder mt36 Kontaktröhrchen träger mt36 Sosten tubito de contacto mt36	722789
12	Diffusore gas isolante mt 36 Diffuseur gaz isolant mt 36 Insulating gas diffuser mt 36 Isolierte gas diffusor mt 36 Difusor gas aislante mt 36	722791

ELENCO PEZZI DI RICAMBIO
LISTE PIECES DETACHEES
SPARE PARTS LIST
ERSATZTEILLISTE
PIEZAS DE REPUESTO

MASTERMIG 500

TELWIN®

Esploso macchina, Dessin appareil, Machine drawing, Explosions Zeichnung des Geräts, Diseño seccionado maquina.

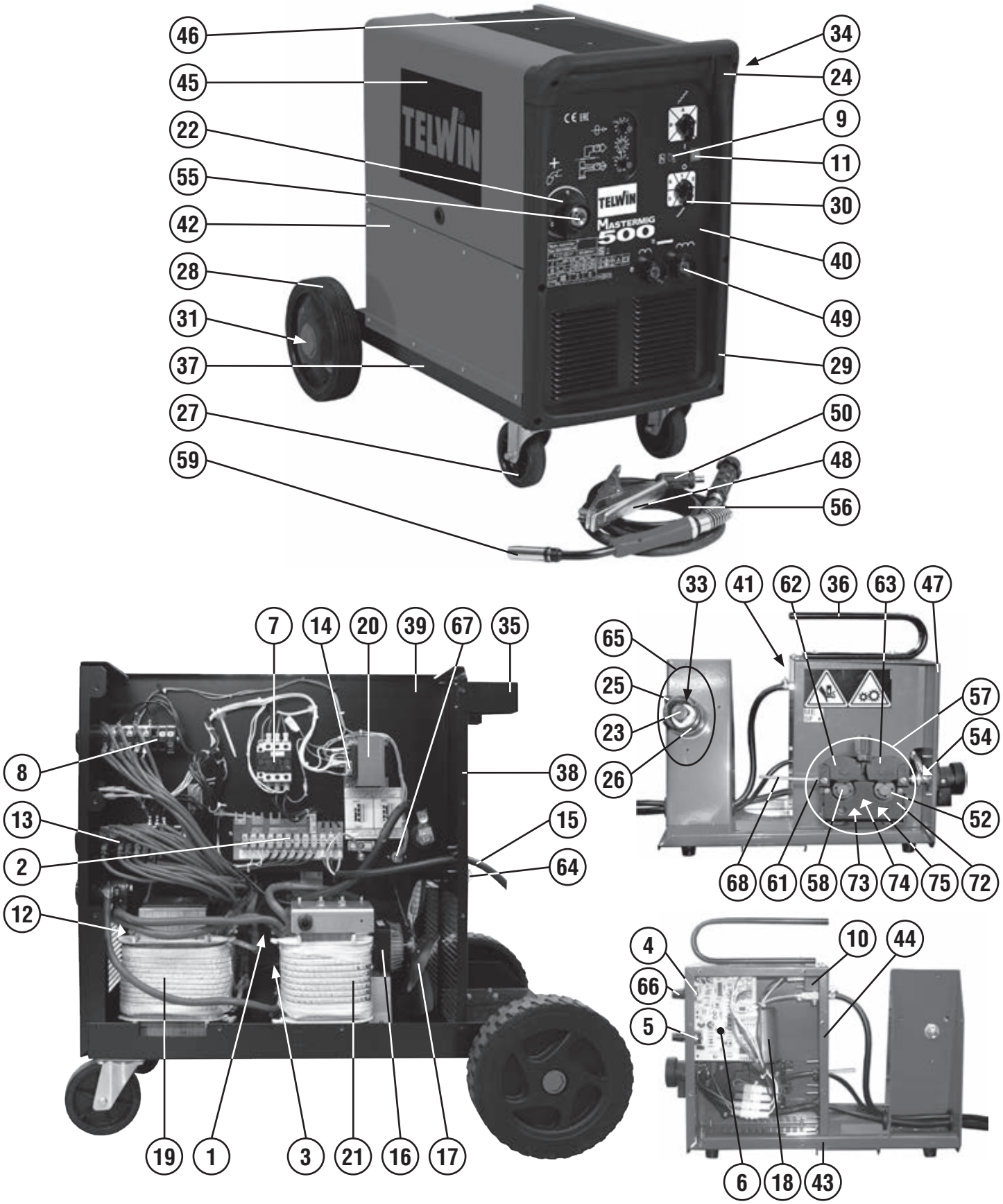

REF.	ELENCO PEZZI DI RICAMBIO PIECES DETACHEES SPARE PARTS LIST ERSATZTEILLISTE PIEZAS DE REPUESTO	CODICE CODE KODE
1	Raddrizzatore trifase Redresseur threephasée Three-phase rectifier Dreiphasiger gleichrichter Rectificador trifàsico	121391
2	Basetta cambio tensione Platine pour change tension Voltage changing card Wechselspannungkarte Base cambio tension	112163
3	Protezione raddrizzatore Protection redresseur Rectifier protection Gleichrichterschutz Protector rectificador	112182
4	Potenziometro Potentiometre Potentiometer Potentiometer Potenciometro	116411
5	Potenziometro Potentiometre Potentiometer Potentiometer Potenciometro	113574
6	Kit scheda controllo timer Kit carte controle timer Timer control pcb kit Timer steuerungskarte kit Kit tarjeta control timer	980714
7	Contattore Contacteur Contactor Kontaktgeber Contactor	121214
8	Commutatore Commutateur Switch Schalter Switch	121399
9	Lampada gialla Temoin lumineaux jaune Yellow pilot lamp Gelbe kontrollampe Piloto amarillo	122594
10	Elettrovalvola Electrovanne Electrovalve Elektroventil Electrovalvula	121801
11	Interruttore Interrupteur Switch Schalter Interruptor	122725
12	Kit termostato Kit thermostat Kit thermostat Thermostat kit Kit termostato	981968
13	Commutatore Commutateur Switch Schalter Switch	121400
14	Fusibile Fusible Fuse Sicherung Fusible	122879
15	Cavo alim. 4g6 3 m Cable alim. 4g6 3 m Mains cable 4g6 3 m Netzkabel 4g6 3 m Cable alim. 4g6 3 m	132202
16	Motore Moteur Motor Motor Motor	152083
17	Ventola Helice Fan blade Fluegelrad Aventador	152113
18	Motore Moteur Motor Motor Motor	153033
19	Trasformatore Transformateur Transformer Trafo Transformateur	169640
20	Trasformatore ausiliario Transformateur auxiliaire Auxiliary transformer Hilfstrafo Transformador auxiliar	164991
21	Reattanza Reactance Reactance Drossel Induccion	169512

REF.	ELENCO PEZZI DI RICAMBIO PIECES DETACHEES SPARE PARTS LIST ERSATZTEILLISTE PIEZAS DE REPUESTO	CODICE CODE KODE
22	Protezione attacco torcia Support isolant torche Torch connection protection Brennersisolierlager Sosten isolator antorcha	312105
23	Volantino per aspo Volant pour support bobine Reel handwheel Wicklerhandrad Volant por aspa	312137
24	Kit manico Kit poignee Handle kit Handgriff kit Kit manija	980082
25	Aspo Support bobine Reel Wickler Aspa	322081
26	Distanziale Entretoise Spacer Abstandstueck Anillo por distanciar	322180
27	Ruota girevole Roue tournante Swivel wheel Bewegliches rad Rueda giratoria	322194
28	Ruota Roue Wheel Rad Rueda	321389
29	Cornice Cadre Frame Rahmen Marco	322736
30	Assieme manopola per commutatore Set poigne pour commutateur Switch knob set Umschaltergriff set Set manjia para conmutador	323101
31	Asse ruote Axe roues Wheels axle Radachse Eje ruedas	422020
32	Adattatore bombola argon it Adaptateur bouteille argon it Argon gas bottle it adaptor Argongasflasche it passtück Adaptador bombona argon it	432036
33	Molla per aspo Ressort pour support bobine Reel spring Wicklerfeder Muelle por aspa	452057
34	Gancio appendi torcia Accrocheur torche Torch hook Haken fuer brenner Gancho fijacion antorcha	644444
35	Portabombola Porte-bouteille Bottle holder Flaschenhalter Apoyo bombona	644447
36	Manico trainafilo Poignee por devidoir Wire feed handle Drahtvorschubhandgriff Manija por arrastre hilo	644449
37	Fondo Chassis Bottom Bodenteil Fondo	645102
38	Retro Partie arriere Back panel Rueckseite Trasera	645103
39	Diaframma Diaphragme Diaphragm Diaphragma Diafragma	645105
40	Frontale Partie frontal Front panel Geraetefront Frontal	642051
41	Fianco Partie lateral Side panel Seitenblech Flanco	645236
42	Fianco Partie lateral Side panel Seitenblech Flanco	651059

REF.	ELENCO PEZZI DI RICAMBIO PIECES DETACHEES SPARE PARTS LIST ERSATZTEILLISTE PIEZAS DE REPUESTO	CODICE CODE KODE
43	Fondo Chassis Bottom Bodenteil Fondo	645235
44	Retro Partie arriere Back panel Rueckseite Trasera	645419
45	Kit sportello Kit guichet Door kit Tuer kit Kit portezuela	980918
46	Kit mantello Kit capot Cover kit Deckelkit Kit panel de cobertura	980866
47	Frontale Partie frontal Front panel Geraetefront Frontal	649829
48	Toledo 400 pinza di massa 400a Toledo 400 pince de masse 400a Toledo 400 work clamp 400a Toledo 400 masseklemme 400a Toledo 400 pinza de masa 400a	712032
49	Presa atlas 50mmq Prise atlas 50mmq Atlas socket 50mmq Atlas steckdose 50mmq Enchufe atlas 50mmq	712036
50	Spina atlas 50mmq Fiche atlas 50mmq Atlas plug 50mmq Atlas stecker 50mmq Enchufe atlas 50mmq	712040
51	Rullino traino 4r ø0.6fe-0.8/0.9fe “p-k” Galet 4r ø 0.6fe-0.8/0.9fe “p-k” Feed roll 4r ø 0.6fe-0.8/0.9fe “p-k” Vorschubrolle 4r ø 0.6fe-0.8/0.9fe “p-k” Roldana 4r ø 0.6fe-0.8/0.9fe “p-k”	742576
52	Rullino traino 4r ø 0.8fe-1.0fe “p-k” Galet 4r ø 0.8fe-1.0fe “p-k” Feed roll 4r ø 0.8fe-1.0fe “p-k” Vorschubrolle 4r ø 0.8fe-1.0fe “p-k” Roldana 4r ø 0.8fe-1.0fe “p-k”	722227
53	Riduttore pressione 2 manometri 32 l\min Reducteur pression 2 manometres 32 l\min Gas regulator 2 manometers 32 l\min Druckminderer 2 manometer 32 l\min Reductor presion 2 manometros 32 l\min	722346
54	Tubo capillare ø 2x5 Tuyau capillaire ø 2x5 Wire conduit ø 2x5 Kapillarrohr ø 2x5 Tubo capilar ø 2x5	742365
55	Attacco torcia Attelage torche Torch connection Brenneranschluss Enganche soplete	723229
56	Pinza di massa + cavo 50mmq 3m ax50 Pince de masse + cable 50mmq 3m ax50 Work clamp + cable 50mmq 3m ax50 Massezange + kabel 50mmq 3m ax50 Pinca de masa + cable 50mmq 3m ax50	804125
57	Traino 4 rulli Devidoir 4 rouleaux 4 Roll wirefeeder 4 Räder drahtvorschub Alimendator de hilo 4 rodillos	981928
58	Vite bloccarullino Vis ferme galet Rollerfixing screw Rollerhalterschraube Tornillo bloque roldana	742397
59	Mt36 torcia mig 3m Mt36 torche mig 3m Mt36 mig torch 3m Mt36 mig brenner 3m Mt36 antorcha mig 3m	742186
60	Rullino traino 4r ø 0.8al-1.0al “p-k” Galet 4r ø 0.8al-1.0al “p-k” Feed roll 4r ø 0.8al-1.0al “p-k” Vorschubrolle 4r ø 0.8al-1.0al “p-k” Roldana 4r ø 0.8al-1.0al “p-k”	742304
61	Entrata guidafilo Entree guide fil Wire guide inlet Drahtfuehrungsseeleeingang Entrata vaina guiadera alambre	742064
62	Ancora controrullino sinistra Ancre contre-galet gauche Left anchor for pressure roller Linker anker für gegenrolle Ancora izquierda para contra roldana	981929
63	Ancora controrullino destra Ancre contre-galet droit Right anchor for pressure roller Rechter anker für gegenrolle Ancora derecha para contra roldana	981930

REF.	ELENCO PEZZI DI RICAMBIO PIECES DETACHEES SPARE PARTS LIST ERSATZTEILLISTE PIEZAS DE REPUESTO	CODICE CODE KODE
64	Kit spina 8 poli Kit fiche 8 contacts 8 Pin plug kit 8 Pin steckerkit Kit enchufe 8 contactos	990226
65	Kit aspo Kit support bobine Reel kit Wickler kit Kit aspa	990264
66	Kit manopola Kit poignee Switch knob kit Schaltergriff kit Kit manija	990328
67	Kit presa Kit prise Socket kit Steckdosekit Kit tomacorriente	990330
68	Kit guaina entrata motore Kit gaine entree moteur Gas hose kit Drahtfuehrungsseelekit Kit vaina guiadera alambre	990097
70	Rullino traino 4r ø 1.2fe-1.6fe “p-k” Galet 4r ø 1.2fe-1.6fe “p-k” Feed roll 4r ø 1.2fe-1.6fe “p-k” Vorschubrolle 4r ø 1.2fe-1.6fe “p-k” Roldana 4r ø 1.2fe-1.6fe “p-k”	722241
71	Rullino traino 4r ø 1.0fe-1.2fe “p-k” Galet 4r ø 1.0fe-1.2fe “p-k” Feed roll 4r ø 1.0fe-1.2fe “p-k” Vorschubrolle 4r ø 1.0fe-1.2fe “p-k” Roldana 4r ø 1.0fe-1.2fe “p-k”	742366
72	Protezione Protecion Cover Deckel Proteccion	322814
73	Adattatore Adapteur Adapter Zahnrad Adaptador	742166
74	Ingranaggio motore Engrenage motor Motor drive gear Motorszahnrad Engranaje motor	742348
75	Ingranaggio Engrenages Gears Zahnrad Engranaje	742590

REF.	ELENCO PEZZI DI RICAMBIO PIECES DETACHEES SPARE PARTS LIST ERSATZTEILLISTE PIEZAS DE REPUESTO	CODICE CODE KODE

REF.	ELENCO PEZZI DI RICAMBIO PIECES DETACHEES SPARE PARTS LIST ERSATZTEILLISTE PIEZAS DE REPUESTO	CODICE CODE KODE

Schema elettrico, Schéma électrique, Diagram, Schaltplan, Esquema de conexiones.

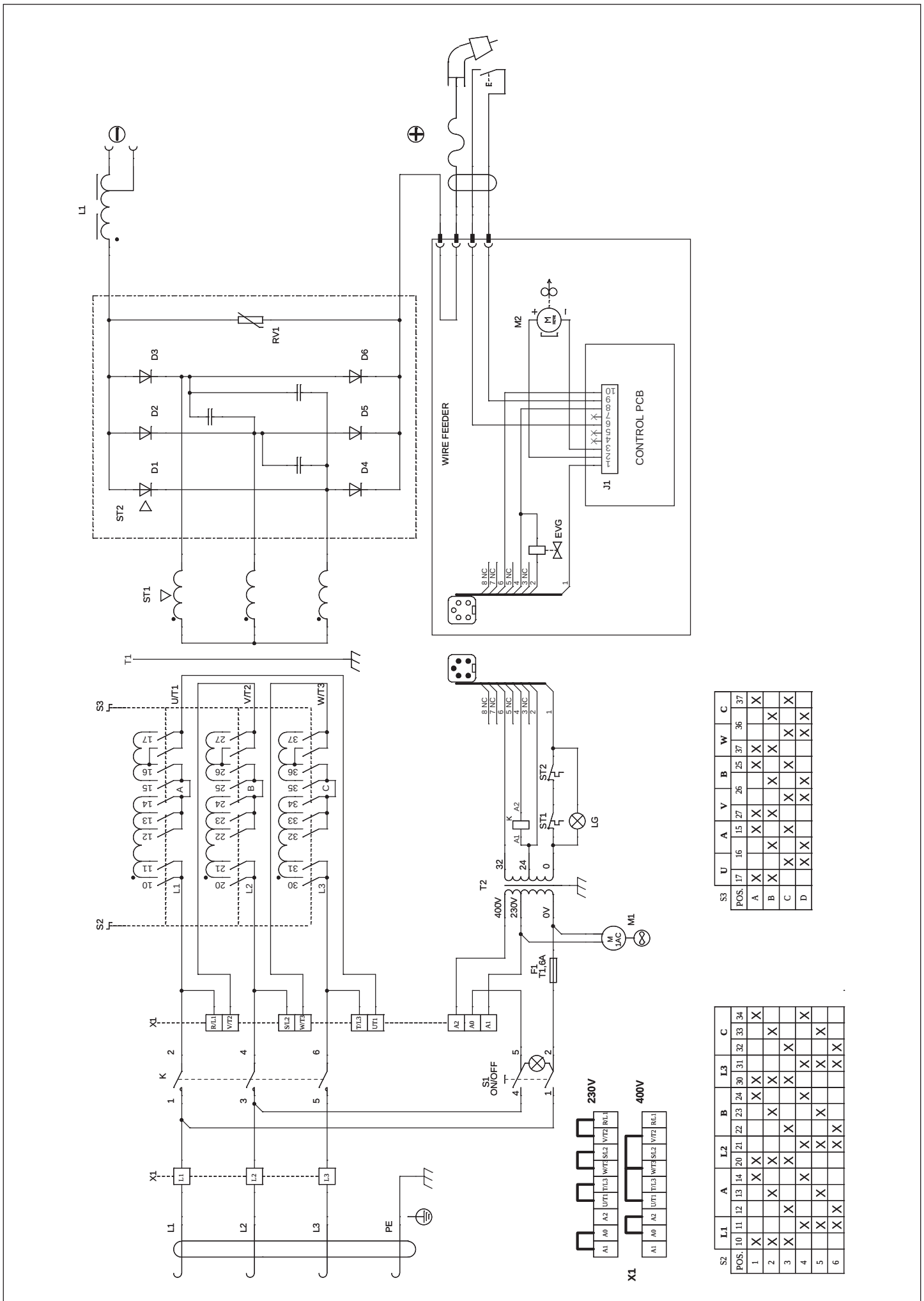

S3	U		A	V		B		W		C	
POS.	17	16	15	27	26	25	37	36	37		
A	X		X	X		X	X		X		X
B	X		X	X		X	X		X		
C		X	X		X	X		X	X		X
D		X	X		X	X		X	X		

S2	L1		A		L2		B		L3		C	
POS.	10	11	12	13	14	20	21	22	23	24	30	31	32	33	34
1	X				X	X				X	X				X
2	X			X		X			X		X			X	
3	X		X			X		X			X		X		
4		X			X		X			X		X			X
5		X		X			X		X			X		X	
6		X	X				X	X				X	X		

Esploso torcia, Dessin torche, Torch drawing, Schlauchpaket - Explosionszeichnung, Diseño seccionado antorcha.

742186 3m
742187 4m
742188 5m

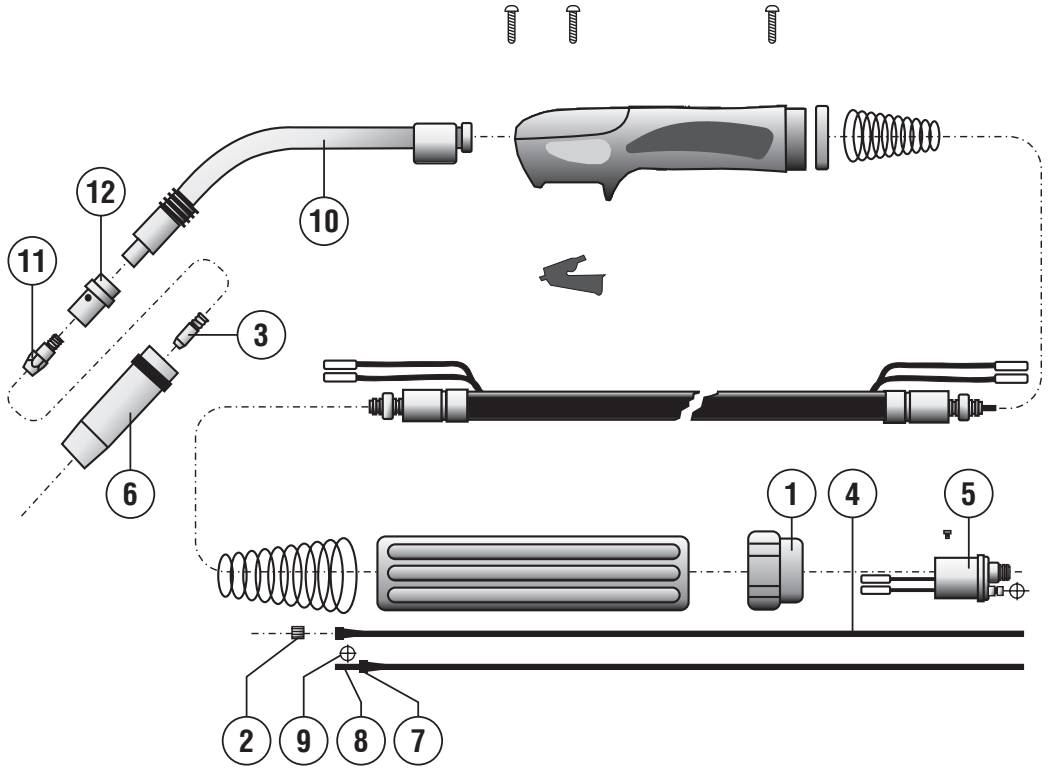

REF.	ELENCO PEZZI RICAMBIO TORCIA LISTE PIECES DETACHEES TORCHE SPARE PARTS LIST TORCH ERSATZTEILLISTE SCLAUCHPAKET PIEZAS DE REPUESTO ANTORCHA	CODICE CODE KODE
1	Ghiera fissaggio Embout fixage Ring nut Nutmutter Virola por fiyacion	722007
2	Dado fissaggio guaina Ecrou fixage gaine Liner nut Befestigungsmutter Dado por fiyacion vaina	722013
3	Tubetto di contatto d. 1,6 Mm al/flux m6 Tube contact d. 1,6 Mm al/flux m6 Contact tip d. 1,6 Mm al/flux m6 Kontaktdüse d. 1,6 Mm al/flux m6 Tubito de contacto d. 1,6 Mm al/flux m6	722818
3	Tubetto di contatto d. 1,6 Mm fe Tube contact d. 1,6 Mm fe Contact tip d. 1,6 Mm fe Kontaktroehrchen d. 1,6 Mm fe Tubito de contacto d. 1,6 Mm fe	722797
3	Tubetto di contatto d. 1,2 Mm fe Tube contact d. 1,2 Mm fe Contact tip d. 1,2 Mm fe Kontaktdüse d. 1,2 Mm fe Tubito de contacto d. 1,2 Mm fe	722682
3	Tubetto di contatto d. 1 Mm fe m6 l=28mm Tube contact d. 1 Mm fe m6 l=28mm Contact tip d. 1 Mm fe m6 l=28mm Kontaktdüse d. 1 Mm fe m6 l=28mm Tubito de contacto d. 1 Mm fe m6 l=28mm	722681
3	Tubetto di contatto d. 0,8 Mm m6 Tube contact d. 0,8 Mm m6 Contact tip d. 0,8 Mm m6 Kontaktdüse d. 0,8 Mm m6 Tubito de contacto d. 0,8 Mm m6	722680
3	Tubetto di contatto d. 1,2 Mm al/flux m6 Tube contact d. 1,2 Mm al/flux m6 Contact tip d. 1,2 Mm al/flux m6 Kontaktdüse d. 1,2 Mm al/flux m6 Tubito de contacto d. 1,2 Mm al/flux m6	722553
3	Tubetto di contatto d. 1 Mm al/flux m6 Tube contact d. 1 Mm al/flux m6 Contact tip d. 1 Mm al/flux m6 Kontaktdüse d. 1 Mm al/flux m6 Tubito de contacto d. 1 Mm al/flux m6	722552
3	Tubetto di contatto d. 0,6 Mm fe Tube contact d. 0,6 Mm fe Contact tip d. 0,6 Mm fe Kontaktdüse d. 0,6 Mm fe Tubito de contacto d. 0,6 Mm fe	722415
4	Guaina guidafilo ø1.0-1.2 3m rossa Gaine pour fil ø1.0-1.2 3m rouge Wire guide hose ø1.0-1.2 3m red Drahtführungsseele ø1.0-1.2 3m rot Vaina guia hilo ø1.0-1.2 3m roja	722689
4	Guaina guidafilo ø0.6-0.8 3m blu Gaine pour fil ø0.6-0.8 3m bleu Wire guide hose ø0.6-0.8 3m blue Drahtführungsseele ø0.6-0.8 3m blue Vaina guia hilo ø0.6-0.8 3m blue	722437

REF.	ELENCO PEZZI RICAMBIO TORCIA LISTE PIECES DETACHEES TORCHE SPARE PARTS LIST TORCH ERSATZTEILLISTE SCLAUCHPAKET PIEZAS DE REPUESTO ANTORCHA	CODICE CODE KODE
4	Guaina guidafilo ø1.2-1.6 4m al Gaine pour fil ø1.2-1.6 4m al Wire guide hose ø1.2-1.6 4m al Drahtführungsseele ø1.2-1.6 4m al Vaina guia hilo ø1.2-1.6 4m al	742811
4	Guaina guidaf. Ø1.0-1.2 4m al Gaine pour fil ø1.0-1.2 4m al Wire guide hose ø1.0-1.2 4m al Drahtführungsseele ø1.0-1.2 4m al Vaina guia hilo ø1.0-1.2 4m al	742812
5	Corpo torcia Corp de torche Torch assy Brennerskörper Enganche antorcha	722441
6	Ugello conico mt36 Buse conique mt36 Conical nozzle mt36 Konische düse mt36 Inyector conico mt36	722792
6	Ugello testa fine mt36 Buse a tete fine mt36 Thin headed nozzle mt36 Verengte düse mt36 Inyector cabeza fina mt36	722793
6	Ugello puntatura Buse pour pointage Spot welding nozzle Punktschweissdüse Inyector por puntos	722794
7	Nipples ferma guaina Nipples serre gaine Wire guide locking nipples Drahtseeleklemmnipples Nipples de bloqueo vaina	722598
7	Nipples ferma guaina Nipples serre gaine Wire guide locking nipples Drahtseeleklemmnipples Nipples de bloqueo vaina	722599
8	Tubetto ferma guaina Tuyau serre gaine Wire guide locking tube Drahtseeleklemmrohr Tubito de bloqueo vaina	722600
9	Anello or Bague or Or ring Or ring Anillo or	722601
9	Anello or Anneau or Or ring Or ring Anillo or	722606
10	Lancia mt36 Lance mt36 Swan neck mt36 Brennerhals mt36 Encorvado mt36	722788

REF.	ELENCO PEZZI RICAMBIO TORCIA LISTE PIECES DETACHEES TORCHE SPARE PARTS LIST TORCH ERSATZTEILLISTE SCLAUCHPAKET PIEZAS DE REPUESTO ANTORCHA	CODICE CODE KODE
11	Supporto tubetto contatto mt36 Support tube contact mt36 Contact tip holder mt36 Kontaktröhrchen träger mt36 Sosten tubito de contacto mt36	722789
12	Diffusore gas isolante mt 36 Diffuseur gaz isolant mt 36 Insulating gas diffuser mt 36 Isolierte gas diffusor mt 36 Difusor gas aislante mt 36	722791

Esploso torcia, Dessin torche, Torch drawing, Schlauchpaket - Explosionszeichnung, Diseño seccionado antorcha.

- Esploso torcia R.A. (Raffreddata ad acqua)
- Dessin torche R.A. (Refroide par eau)
- Drawing sectionalized torch R.A. (Water cooled)
- Zerlegte Zeichnung Schlauchpaket R.A. (Wasserkuhlung)
- Diseno seccionado antorcha R.A. (Enfriadar a agua)

722625 3m
742821 4m
722683 5m

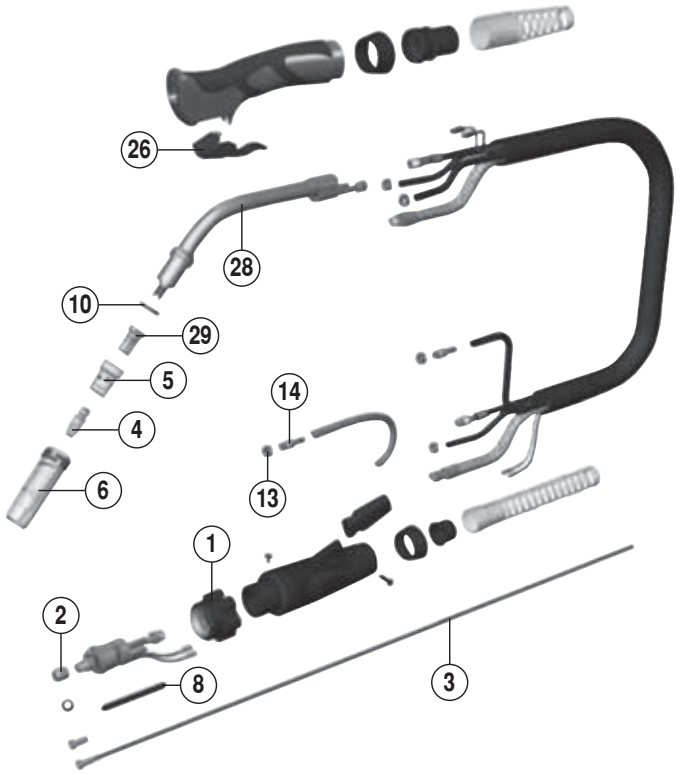

REF.	ELENCO PEZZI RICAMBIO TORCIA LISTE PIECES DETACHEES TORCHE SPARE PARTS LIST TORCH ERSATZTEILLISTE SCLAUCHPAKET PIEZAS DE REPUESTO ANTORCHA	CODICE CODE KODE
1	Ghiera fissaggio Embout fixage Ring nut Nutmutter Virola por fiyacion	722007
2	Dado fissaggio guaina Ecrou fixage gaine Liner nut Befestigungsmutter Dado por fiyacion vaina	722013
3	Guaina guidafilo ø1-1,2 tefl/graf.+Term. Gaine pour fil ø1-1,2 tefl/graf.+Term. Wire guide hose ø1-1,2 tefl/graf.+Term. Drahtführungsseele ø1-1,2 tefl/graf.+Te Vaina guia hilo ø1-1,2 tefl/graf.+Term.	742812
3	Guaina guidafilo ø 1,2-1,6 mm 3 m Gaine pour fil ø 1,2-1,6 mm 3 m Wire guide hose ø 1,2-1,6 mm 3 m Drahtführungsseele ø 1,2-1,6 mm 3 m Vaina guia hilo ø 1,2-1,6 mm 3 m	722588
3	Guaina guidafilo ø 1,0-1,2 mm 3 m Gaine pour fil ø 1,0-1,2 mm 3 m Wire guide hose ø 1,0-1,2 mm 3 m Drahtführungsseele ø 1,0-1,2 mm 3 m Vaina guia hilo ø 1,0-1,2 mm 3 m	722590
3	Guaina guidafilo ø 1,6-2,0 al teflon Gaine pour fil ø 1,6-2,0 al teflon Wire guide hose ø 1,6-2,0 al teflon Drahtführungsseele ø 1,6-2,0 al teflon Vaina guia hilo ø 1,6-2,0 al teflon	742811
3	Guaina g.F. D.2-2,4 Mt.3 Gaine guide fil d.2-2,4 M3 Wire guide hose d.2-2,4 M3 Drahtfuehrungsseele d.2-2,4 M3 Vaina guiadera alambre d. 2-2,4 M3	722820
4	Tubetto di contatto d. 0,8 Mm m8 Tube contact d. 0,8 Mm m8 Contact tip d. 0,8 Mm m8 Kontaktdüse d. 0,8 Mm m8 Tubito de contacto d. 0,8 Mm m8	722581
4	Tubetto di contatto d. 1 Mm Tube contact d. 1 Mm Contact tip d. 1 Mm Kontaktdüse d. 1 Mm Tubito de contacto d. 1 Mm	722582
4	Tubetto di contatto d. 1,2 Mm Tube contact d. 1,2 Mm Contact tip d. 1,2 Mm Kontaktdüse d. 1,2 Mm Tubito de contacto d. 1,2 Mm	722583
4	Tubetto di contatto ø 2,4 mm Tube contact ø 2,4 mm Contact tip ø 2,4 mm Kontaktdüse ø 2,4 mm Tubito de contacto ø 2,4 mm	722773
4	Tubetto contatto d.2,0 Tube contact d.2,0 Contact tip d.2,0 Kontaktroehrchen d.2,0 Tubito de contacto d.2,0	722586

REF.	ELENCO PEZZI RICAMBIO TORCIA LISTE PIECES DETACHEES TORCHE SPARE PARTS LIST TORCH ERSATZTEILLISTE SCLAUCHPAKET PIEZAS DE REPUESTO ANTORCHA	CODICE CODE KODE
4	Tubetto di contatto d. 1,6 Mm Tube contact d. 1,6 Mm Contact tip d. 1,6 Mm Kontaktroehrchen d. 1,6 Mm Tubito de contacto d. 1,6 Mm	722587
4	Tubetto di contatto d. 2 Mm al/flux Tube contact d. 2 Mm al/flux Contact tip d. 2 Mm al/flux Kontaktdüse d. 2 Mm al/flux Tubito de contacto d. 2 Mm al/flux	722772
4	Tubetto di contatto d. 1,6 Mm al/flux m8 Tube contact d. 1,6 Mm al/flux m8 Contact tip d. 1,6 Mm al/flux m8 Kontaktdüse d. 1,6 Mm al/flux m8 Tubito de contacto d. 1,6 Mm al/flux m8	722771
4	Tubetto di contatto d. 1,2 Mm al/flux m8 Tube contact d. 1,2 Mm al/flux m8 Contact tip d. 1,2 Mm al/flux m8 Kontaktdüse d. 1,2 Mm al/flux m8 Tubito de contacto d. 1,2 Mm al/flux m8	722770
4	Tubetto di contatto d. 1,6 Mm(cu cr zr) Tube contact d. 1,6 Mm (cu cr zr) Contact tip d. 1,6 Mm (cu cr zr) Kontaktdüse d. 1,6 Mm (cu cr zr) Tubito de contacto d. 1,6 Mm (cu cr zr)	742161
4	Tubetto di contatto d. 1,2 Mm(cu cr zr) Tube contact d. 1,2 Mm (cu cr zr) Contact tip d. 1,2 Mm (cu cr zr) Kontaktdüse d. 1,2 Mm (cu cr zr) Tubito de contacto d. 1,2 Mm (cu cr zr)	742160
4	Tubetto di contatto d. 1 Mm (cu cr zr) Tube contact d. 1 Mm (cu cr zr) Contact tip d. 1 Mm (cu cr zr) Kontaktdüse d. 1 Mm (cu cr zr) Tubito de contacto d. 1 Mm (cu cr zr)	742159
4	Tubetto di contatto d. 1 Mm al/flux m8 Tube contact d. 1 Mm al/flux m8 Contact tip d. 1 Mm al/flux m8 Kontaktdüse d. 1 Mm al/flux m8 Tubito de contacto d. 1 Mm al/flux m8	722769
5	Diffusore gas isolante mt 501 Diffuseur gaz isolant mt 501 Insulating gas diffuser mt 501 Isolierte gas diffusor mt 501 Difusor gas aislante mt 501	722593
6	Ugello puntatura Buse pointage Spot welding nozzle Punktschweissduese Inyector por puntos	722594
6	Ugello cilindrico mt500 Buse cylindrique mt500 Cylindrical nozzle mt500 Zylindrische düse mt500 Inyector cilindrico mt500	722595
6	Ugello conico mt500 Buse conique mt500 Conical nozzle mt500 Konische düse mt500 Inyector conico mt500	722585

REF.	ELENCO PEZZI RICAMBIO TORCIA LISTE PIECES DETACHEES TORCHE SPARE PARTS LIST TORCH ERSATZTEILLISTE SCLAUCHPAKET PIEZAS DE REPUESTO ANTORCHA	CODICE CODE KODE
8	Tubetto ferma guaina Tuyau serre gaine Wire guide locking tube Drahtseeleklemmrohr Tubito de bloqueo vaina	722600
10	Rondella isolante Rondelle isolante Insulating washer Isolierschraube Arandela aislante	722603
13	Fascetta Collier Hose ring Schelle Cintura	232114
14	Riduzione innesti rapidi Reducteur Reduction Schnelle kupplungreduktion Reduccion inyertos rapidos	722608
26	Pulsante Poussoir Pushbutton Druckknopf Pulsador	722677
28	Lancia mt500 Lance mt500 Swan neck mt500 Brennerhals mt500 Encorvado mt500	722708
29	Supporto tubetto contatto mt500 Support tube contact mt500 Contact tip holder mt500 Kontaktröhrchen träger mt500 Sosten tubito de contacto mt500	722709

ELENCO PEZZI DI RICAMBIO
LISTE PIECES DETACHEES
SPARE PARTS LIST
ERSATZTEILLISTE
PIEZAS DE REPUESTO

MASTERMIG 275i

TELWIN®

Esploso macchina, Dessin appareil, Machine drawing, Explosions Zeichnung des Geräts, Diseño seccionado maquina.

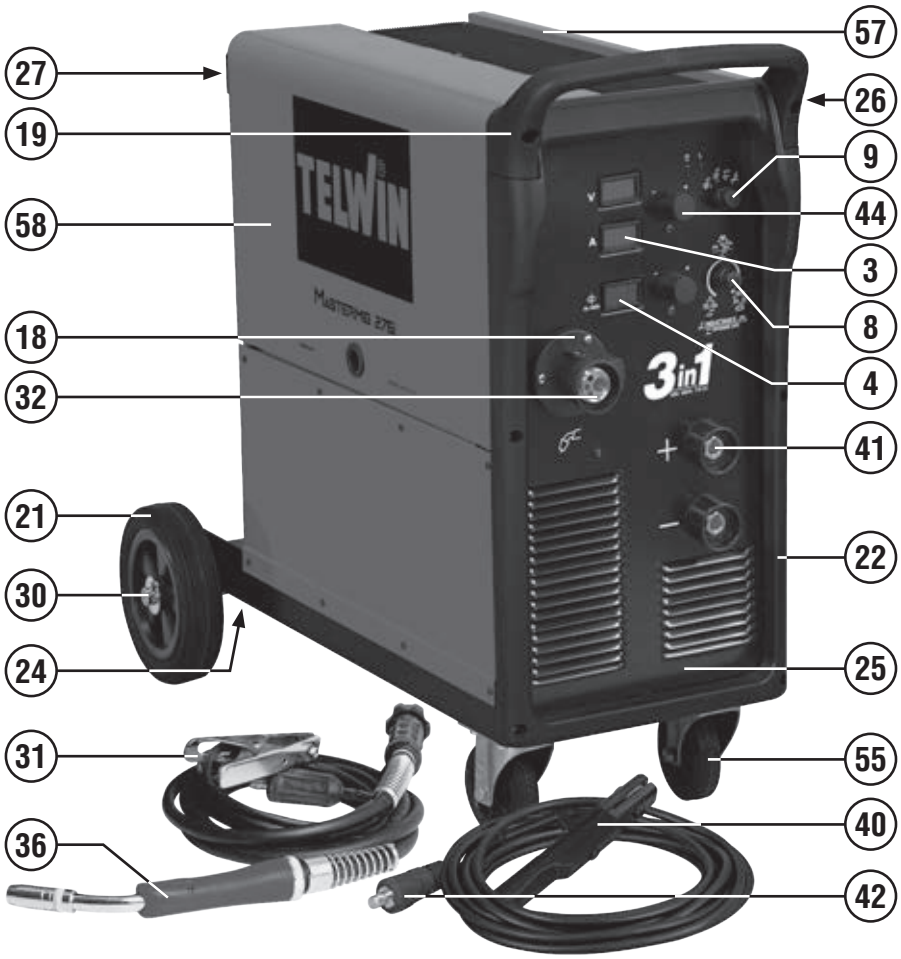

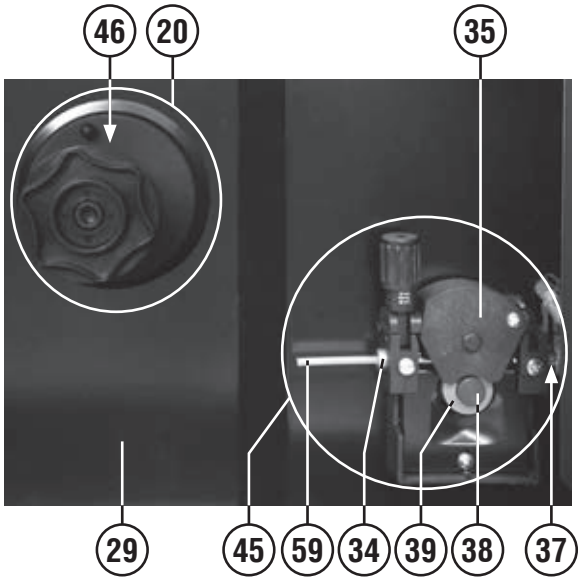

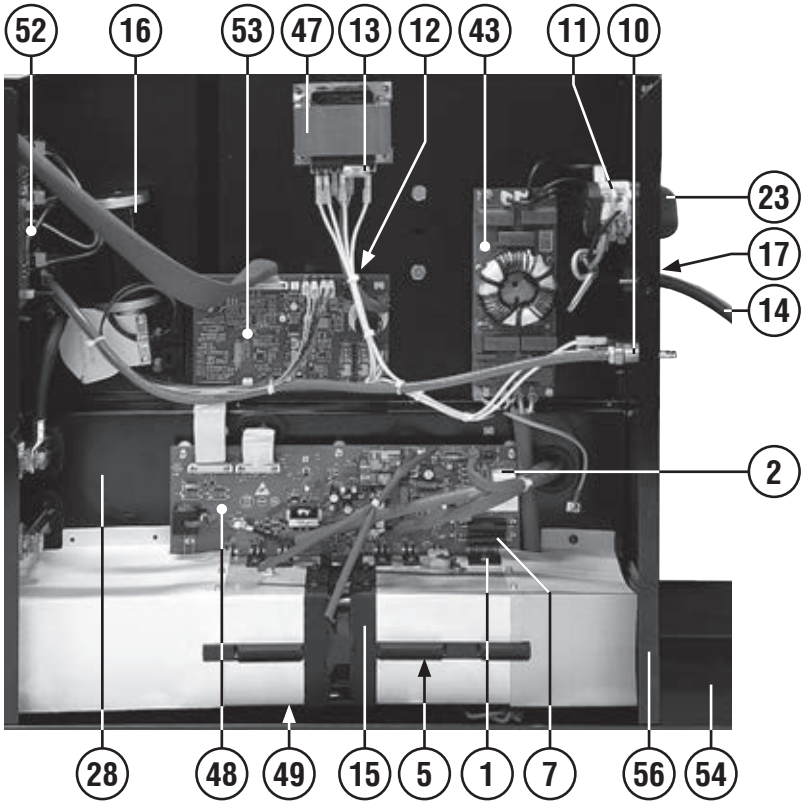

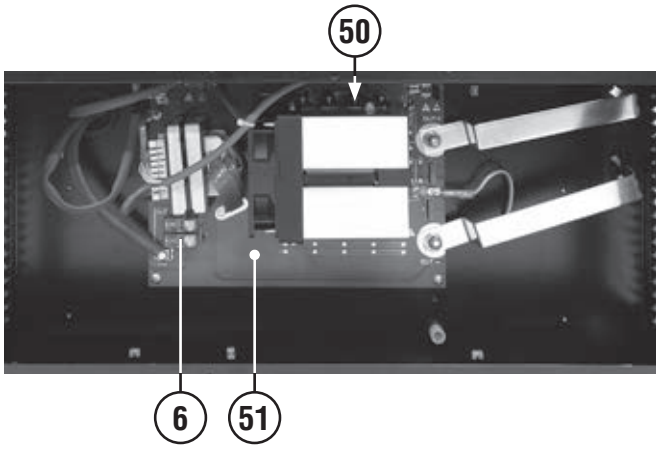

REF.	ELENCO PEZZI DI RICAMBIO PIECES DETACHEES SPARE PARTS LIST ERSATZTEILLISTE PIEZAS DE REPUESTO	CODICE CODE KODE
1	Ponte monofase Pont monophase Single phase bridge Einfasige brücke Puente monofasico	111017
2	Rele' Relais Relais Relais Conectador	111252
3	Kit display linear Kit display linear Kit display linear Kit display linear Kit display linear	112003
4	Assieme display 3 digit + punto Set affichage 3 digit + point Display set - 3 digit + point Tafel set - 3 digit + punkt Set pantalla 3 digit + punto	112032
5	Condensatore Condensateur Capacitor Kondensator Condensador	113122
6	Rele' Relais Relais Relais Relais	116320
7	Res. Met. 10r 2w 5% fuse Res. Met. 10r 2w 5% fuse Res. Met. 10r 2w 5% fuse Res. Met. 10r 2w 5% fuse Res. Met. 10r 2w 5% fuse	116962
8	Manopola Poigne Knob Griff Manjia	121394
9	Manopola Poignee Knob Griff Manija	121751
10	Elettrovalvola Electrovanne Electrovalve Elektroventil Electrovalvula	121800
11	Commutatore Commutateur Switch Schalter Conmutador	122017
12	Fusibile Fusible Fuse Sicherung Fusible	122434
13	Fusibile Fusible Fuse Sicherung Fusible	122879
14	Cavo alim. 4g2.5 2 M Cable alim. 4g2.5 2 M Mains cable 4g2.5 2 M Netzkabel 4g2.5 2 M Cable alim. 4g2.5 2 M	132244
15	Ventilatore 12vdc 92x 92x25 Ventilateur 12vdc 92x 92x25 Fan 12vdc 92x 92x25 Ventilator 12vdc 92x 92x25 Ventilador 12vdc 92x 92x25	152361
16	Motore Moteur Motor Motor Motor	153033
17	Pressacavo Presse cable Cable bushing Kabelhalter Prensa cable	312068
18	Protezione attacco torcia Support isolant torche Torch connection protection Brennersisolierlager Sosten isolator antorcha	312105
19	Manico Poignee Handle Handgriff Manija	312328
20	Distanziale per aspo Entretoise pour support bobine Reel spacer Distanzstueck Espàciador por aspa	321210
21	Ruota Roue Wheel Rad Rueda	321390
22	Cornice Cadre Frame Rahmen Marco	322698
23	Assieme manopola per commutatore Set poigne pour commutateur Switch knob set Umschaltergriff set Set manjia para conmutador	323101
24	Staffa asse ruote Bride axe roue Wheel axel bracket Räderachsel bügel Estribo eje rueda	485953
25	Frontale Partie frontale Front panel Gerätefront Frontal	642901
26	Gancio appendi torcia Accrocheur torche Torch hook Haken fuer brenner Gancho fijacion antorcha	644444
27	Staffa portabombola Etrier porte-bouteille Bottle-holder bracket Kasten fuer flasche Estribo porta bombona	645673
28	Diaframma inferiore Diaphragme inferieur Lower diaphragm Unten diaphragma Diafragma inferior	645984
29	Diaframma superiore Diaphragme superieur Upper diaphragm Obere diaphragma Diafragma superior	645992
30	Asse per ruote Axe roues Wheels axle Radachse Eje ruedas	681092
31	Toledo 300 pinza di massa 300a Toledo 300 borne de masse 300a Toledo 300 work clamp 300a Toledo 300 masseklemme 300a Toledo 300 borne de masa 300a	712231
32	Attacco torcia Attelage torche Torch connection Brenneranschluss Enganche soplete	723229
33	Rullino traino 2r 1,0fe-1,2fe "f" Galet 2r 1,0fe-1,2fe "f" Feed roll 2r 1,0fe-1,2fe "f" Vorschubrolle 2r 1,0fe-1,2fe "f" Roldana 2r 1,0fe-1,2fe "f"	742054
34	Entrata guidafilo Entree guide fil Wire guide inlet Drahtfuehrungsseeleeingang Entrata vaina guiadera alambre	742064
35	Ancora controrullino Ancre contre-galet Anchor for pressure roller Anker für gegenrolle Ancora para contra roldana	742096
36	Mt25 torcia mig 3m Mt25 torche mig 3m Mt25 mig torch 3m Mt25 mig brenner 3m Mt25 antorcha mig 3m	742183
37	Tubo capillare ø 2x5 Tuyau capillaire ø 2x5 Wire conduit ø 2x5 Kapillarrohr ø 2x5 Tubo capilar ø 2x5	742365
38	Vite bloccarullino Vis ferme galet Rollerfixing screw Rollerhalterschraube Tornillo bloque roldana	742397
39	Rullino traino 2r 0,6fe-0,8fe "f" Galet 2r 0,6fe-0,8fe "f" Feed roll 2r 0,6fe-0,8fe "f" Vorschubrolle 2r 0,6fe-0,8fe "f" Roldana 2r 0,6fe-0,8fe "f"	742575
40	Pinza portaelettrodo+ cavo 25mmq 4m ax50 Portelectrode+ cable 25mmq 4m pince ax50 Electrode holder + cable 25mmq 4m ax50 Elektrondehalter + kabel 25mmq 4m ax50 Pinca portaelectrodo+cable 25mmq 4m ax50	804123
41	Presa atlas 50mmq Prise atlas 50mmq Socket atlas 50mmq Steckdose atlas 50mmq Enchufe atlas 50mmq	804197
42	Spina atlas 50mmq Fiche atlas 50mmq Plug atlas 50mmq Stecker atlas 50mmq Enchufe atlas 50mmq	804200
43	Kit scheda filtro ingresso Kit platine filtre input Input filter card kit Input filterkarte kit Kit tarjeta filtro input	980947
44	Kit manopola encoder d.29 Kit poignee encoder d.29 Encoder knob kit d.29 Encodergriff kit d.29 Kit manija encoder d.29	980968
45	Kit traino due rulli Kit devidoir 2 roleaux Kit 2 rolls wirefeeder Kit 2 raeder drahtvorschub Kit alimentador de hilo 2 rollos	981496
46	Kit aspo 15kg Kit support bobine 15kg Reel kit 15kg Wickler kit 15kg Kit aspa 15kg	981703
47	Kit autotrasfo Kit autotrasfo Autotrasfo kit Autotrasfo kit Kit autotrasfo	981869
48	Kit scheda primario completa Kit platine primaire complete Complete primary pcb kit Komplette primärtrafokarte kit Kit tarjeta primario completa	982474
49	Kit igbt Kit igbt Kit igbt Kit igbt Kit igbt	982477
50	Kit diodi Kit diodes Diodes kit Dioden kit Kit diodos	982478
51	Kit scheda secondario completa Kit platine secondaire complete Complete secondary pcb kit Komplette sekundärtrafokarte kit Kit tarjeta secundario completa	982535
52	Kit scheda pannello Kit platine frontal Front panel card kit Gerätefrontskarte kit Kit tarjeta frontal	982569
53	Kit scheda controllo Kit carte controle Control board kit Steuerungskarte kit Kit tarjeta control	982572
54	Kit fondo Kit chassis Bottom kit Bodenteil kit Kit fondo	982573
55	Kit ruote Kit roues Wheels kit Räderkit Kit ruedas	982577
56	Kit retro Kit partie arriere Back panel kit Rückseite kit Kit trasera	982578
57	Kit mantello Kit capot Cover kit Deckel kit Kit panel de cobertura	982580
58	Kit sportello Kit guichet Door kit Tür-kit Kit portezuela	982582
59	Kit guaina entrata motore Kit gaine entree moteur Gas hose kit Drahtfuehrungsseelekit Kit vaina guiadera alambre	990097

Schema elettrico, Schéma électrique, Diagram, Schaltplan, Esquema de conexiones.

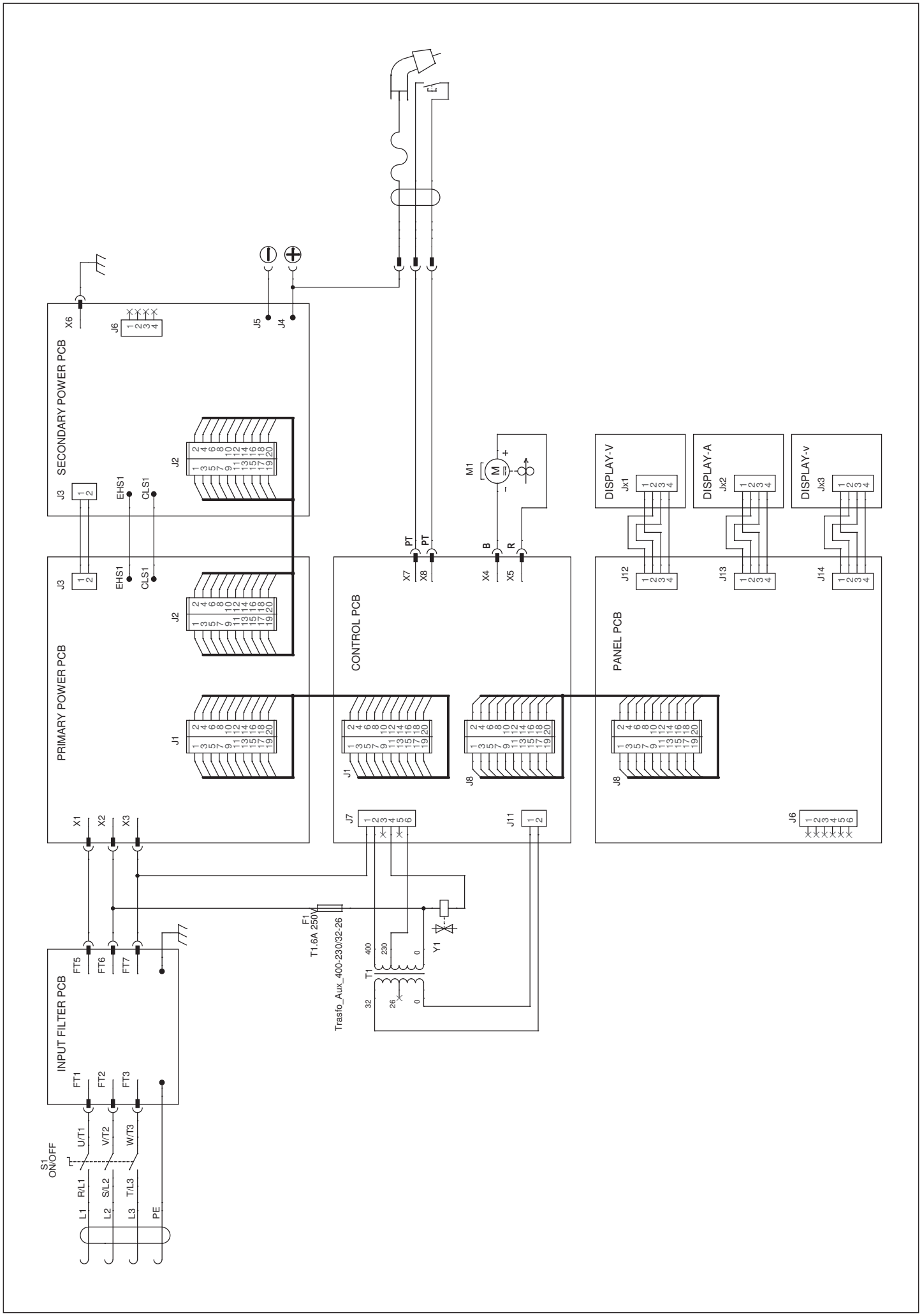

Esploso torcia, Dessin torche, Torch drawing, Schlauchpaket - Explosionszeichnung, Diseño seccionado antorcha.

742183 3m
742184 4m
742185 5m

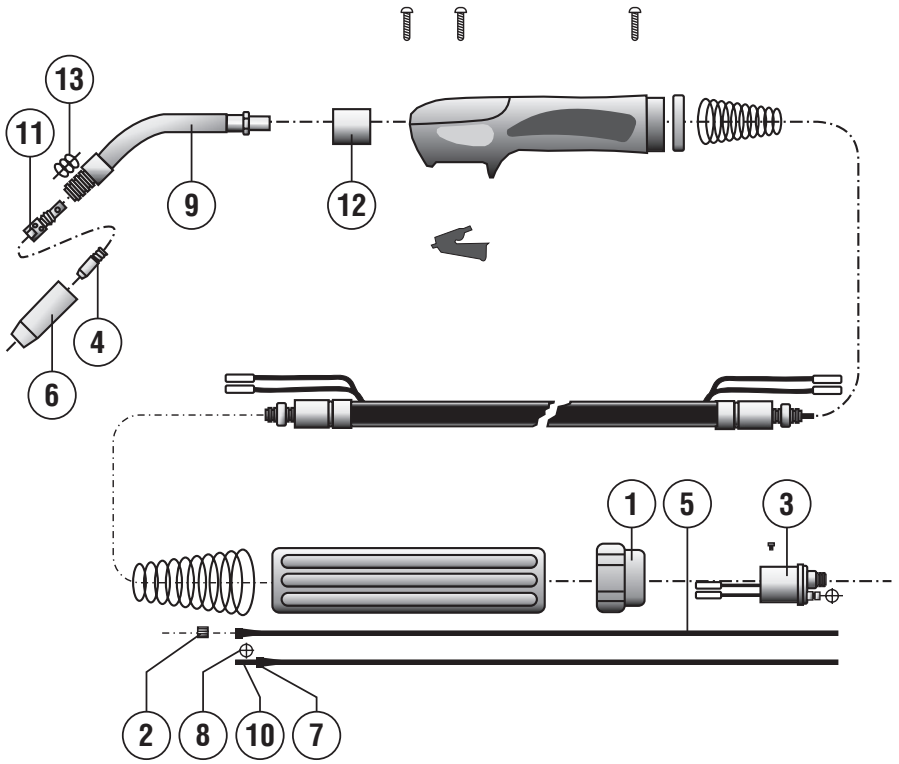

REF.	ELENCO PEZZI RICAMBIO TORCIA LISTE PIECES DETACHEES TORCHE SPARE PARTS LIST TORCH ERSATZTEILLISTE SCLAUCHPAKET PIEZAS DE REPUESTO ANTORCHA	CODICE CODE KODE
1	Ghiera fissaggio Embout fixage Ring nut Nutmutter Virola por fiyacion	722007
2	Dado fissaggio guaina Ecrou fixage gaine Liner nut Befestigungsmutter Dado por fiyacion vaina	722013
3	Corpo torcia Corp de torche Torch assy Brennerskörper Enganche antorcha	722441
4	Tubetto di contatto d. 1,2 Mm fe Tube contact d. 1,2 Mm fe Contact tip d. 1,2 Mm fe Kontaktdüse d. 1,2 Mm fe Tubito de contacto d. 1,2 Mm fe	722682
4	Tubetto di contatto d. 1 Mm fe m6 l=28mm Tube contact d. 1 Mm fe m6 l=28mm Contact tip d. 1 Mm fe m6 l=28mm Kontaktdüse d. 1 Mm fe m6 l=28mm Tubito de contacto d. 1 Mm fe m6 l=28mm	722681
4	Tubetto di contatto d. 0,8 Mm m6 Tube contact d. 0,8 Mm m6 Contact tip d. 0,8 Mm m6 Kontaktdüse d. 0,8 Mm m6 Tubito de contacto d. 0,8 Mm m6	722680
4	Tubetto di contatto d. 1,2 Mm al/flux m6 Tube contact d. 1,2 Mm al/flux m6 Contact tip d. 1,2 Mm al/flux m6 Kontaktdüse d. 1,2 Mm al/flux m6 Tubito de contacto d. 1,2 Mm al/flux m6	722553
4	Tubetto di contatto d. 1 Mm al/flux m6 Tube contact d. 1 Mm al/flux m6 Contact tip d. 1 Mm al/flux m6 Kontaktdüse d. 1 Mm al/flux m6 Tubito de contacto d. 1 Mm al/flux m6	722552
4	Tubetto di contatto d. 0,6 Mm fe Tube contact d. 0,6 Mm fe Contact tip d. 0,6 Mm fe Kontaktdüse d. 0,6 Mm fe Tubito de contacto d. 0,6 Mm fe	722415
5	Guaina guidafilo ø0.6-0.8 3m blu Gaine pour fil ø0.6-0.8 3m bleu Wire guide hose ø0.6-0.8 3m blue Drahtführungsseele ø0.6-0.8 3m blue Vaina guia hilo ø0.6-0.8 3m blue	722437
5	Guaina guidafilo ø1.0-1.2 3m rossa Gaine pour fil ø1.0-1.2 3m rouge Wire guide hose ø1.0-1.2 3m red Drahtführungsseele ø1.0-1.2 3m rot Vaina guia hilo ø1.0-1.2 3m roja	722689
5	Guaina guidafilo ø1.0-1.2 4m al Gaine pour fil ø 1.0-1.2 4m al Wire guide hose ø 1.0-1.2 4m al Drahtführungsseele ø 1.0-1.2 4m al Vaina guia hilo ø 1.0-1.2 4m al	742984

REF.	ELENCO PEZZI RICAMBIO TORCIA LISTE PIECES DETACHEES TORCHE SPARE PARTS LIST TORCH ERSATZTEILLISTE SCLAUCHPAKET PIEZAS DE REPUESTO ANTORCHA	CODICE CODE KODE
6	Ugello cilindrico mt25 Buse cylindrique mt25 Cylindrical nozzle mt25 Zylindrische düse mt25 Inyector cilindrico mt25	722684
6	Ugello conico mt25 Buse conique mt25 Conical nozzle mt25 Konische düse mt25 Inyector conico mt25	722685
6	Ugello testa fine mt25 Buse a tete fine mt25 Thin headed nozzle mt25 Verengte düse mt25 Inyector cabeza fina mt25	722686
6	Ugello per puntatura d. 18 Mm Buse pointage d. 18 Mm Spot welding nozzle d. 18 Mm Punktschweissgasdüse d. 18 Mm Inyector por puntos d. 18 Mm	722687
7	Nipples ferma guaina Nipples serre gaine Wire guide locking nipples Drahtseeleklemmnipples Nipples de bloqueo vaina	722598
8	Anello or Bague or Or ring Or ring Anillo or	722601
8	Anello or Anneau or Or ring Or ring Anillo or	722606
9	Lancia mt25 Lance mt25 Swan neck mt25 Brennerhals mt25 Encorvado mt25	722696
10	Tubetto ferma guaina Tuyau serre gaine Wire guide locking tube Drahtseeleklemmrohr Tubito de bloqueo vaina	722600
11	Diffusore gas mt25 Diffuseur gaz mt25 Gas diffuser mt25 Gasdiffusor mt25 Diffusor gas mt25	722688
12	Isolante corpo torcia Isolant corps de torche Torch connection insulation Brenneranschlussblock isolierteil Aislador cuerpo de antorcha	722693
13	Molla per ugello mt25 Ressort pour buse mt25 Nozzle spring mt25 Düsenfeder mt25 Muelle por inyector mt25	722690

REF.	ELENCO PEZZI RICAMBIO TORCIA LISTE PIECES DETACHEES TORCHE SPARE PARTS LIST TORCH ERSATZTEILLISTE SCLAUCHPAKET PIEZAS DE REPUESTO ANTORCHA	CODICE CODE KODE

ELENCO PEZZI DI RICAMBIO
LISTE PIECES DETACHEES
SPARE PARTS LIST
ERSATZTEILLISTE
PIEZAS DE REPUESTO

MASTERMIG 305i

Esploso macchina, Dessin appareil, Machine drawing, Explosions Zeichnung des Geräts, Diseño seccionado maquina.

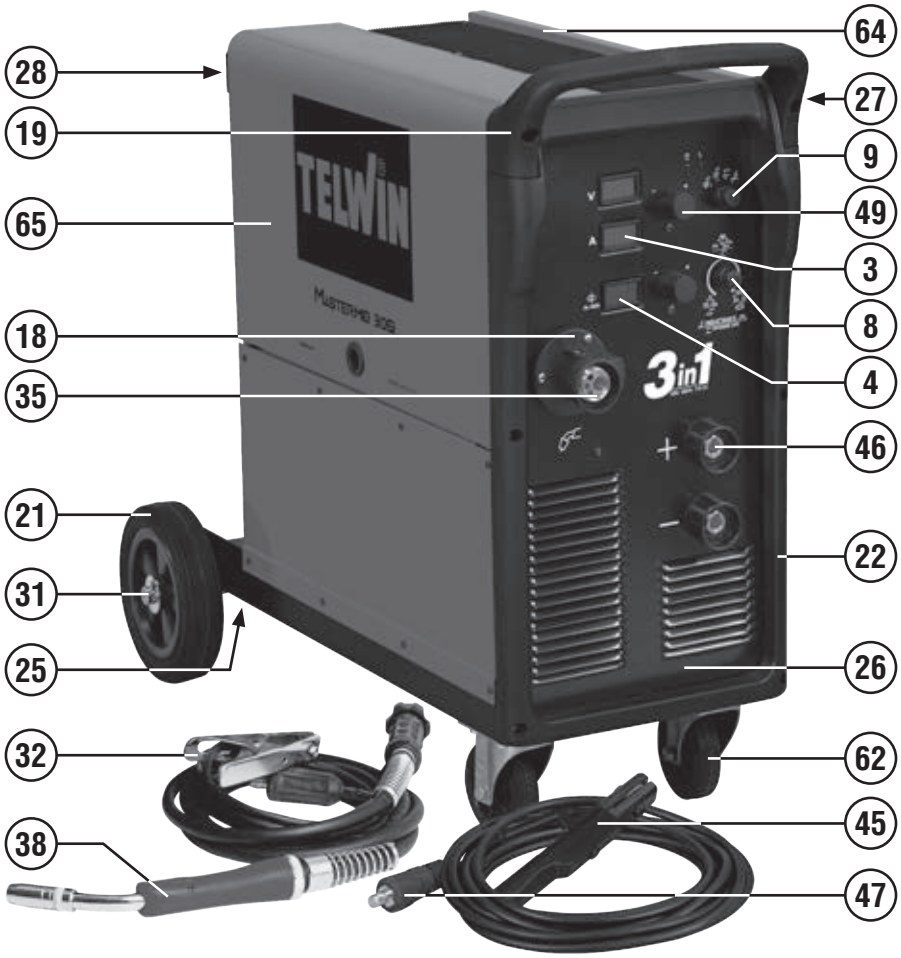

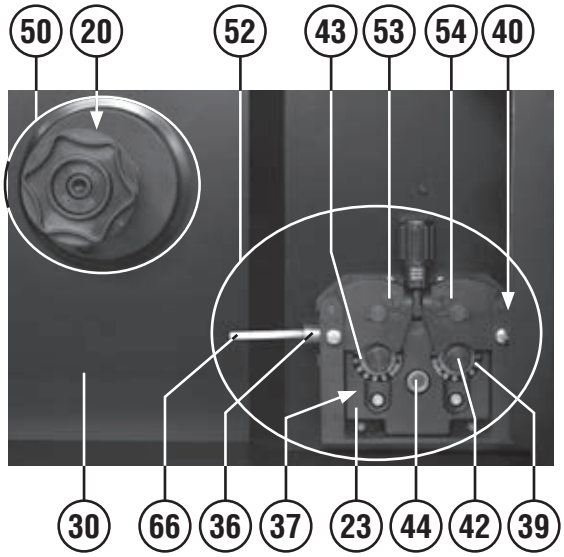

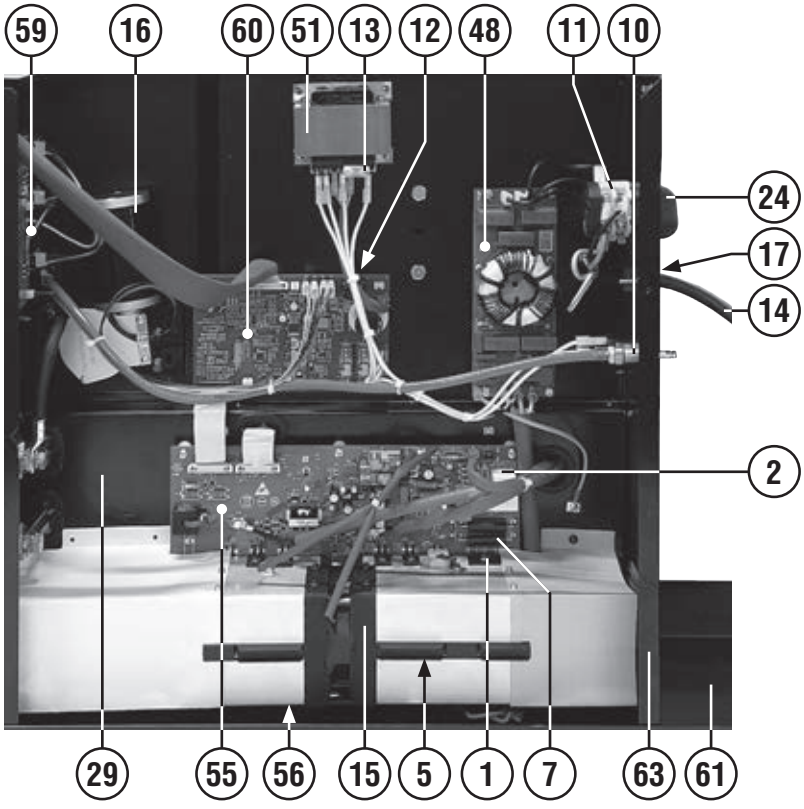

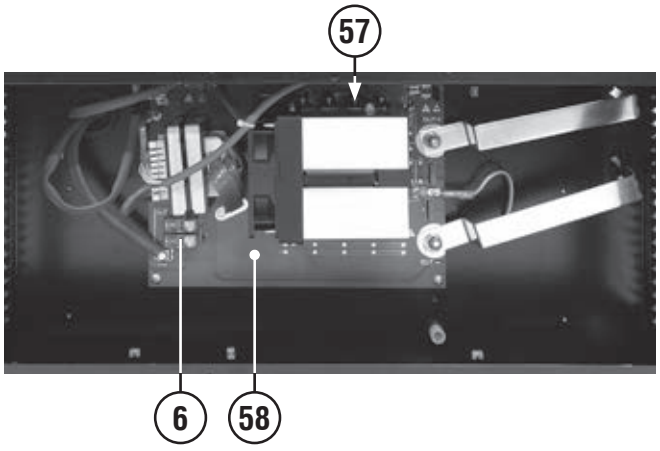

REF.	ELENCO PEZZI DI RICAMBIO PIECES DETACHEES SPARE PARTS LIST ERSATZTEILLISTE PIEZAS DE REPUESTO	CODICE CODE KODE
1	Ponte monofase Pont monophase Single phase bridge Einfasige brücke Puente monofasico	111017
2	Rele' Relais Relais Relais Conectador	111252
3	Kit display linear Kit display linear Kit display linear Kit display linear Kit display linear	112003
4	Assieme display 3 digit + punto Set affichage 3 digit + point Display set - 3 digit + point Tafel set - 3 digit + punkt Set pantalla 3 digit + punto	112032
5	Condensatore Condensateur Capacitor Kondensator Condensador	113122
6	Rele' Relais Relais Relais Relais	116320
7	Res. Met. 10r 2w 5% fuse Res. Met. 10r 2w 5% fuse Res. Met. 10r 2w 5% fuse Res. Met. 10r 2w 5% fuse Res. Met. 10r 2w 5% fuse	116962
8	Manopola Poigne Knob Griff Manjia	121394
9	Manopola Poignee Knob Griff Manija	121751
10	Elettrovalvola Electrovanne Electrovalve Elektroventil Electrovalvula	121800
11	Commutatore Commutateur Switch Schalter Conmutador	122017
12	Fusibile Fusible Fuse Sicherung Fusible	122434
13	Fusibile Fusible Fuse Sicherung Fusible	122879
14	Cavo alim. 4g2.5 2 M Cable alim. 4g2.5 2 M Mains cable 4g2.5 2 M Netzkabel 4g2.5 2 M Cable alim. 4g2.5 2 M	132244
15	Ventilatore 12vdc 92x 92x25 Ventilateur 12vdc 92x 92x25 Fan 12vdc 92x 92x25 Ventilator 12vdc 92x 92x25 Ventilador 12vdc 92x 92x25	152361
16	Motore Moteur Motor Motor Motor	153033
17	Pressacavo Presse cable Cable bushing Kabelhalter Prensa cable	312068
18	Protezione attacco torcia Support isolant torche Torch connection protection Brennersisolierlager Sosten isolator antorcha	312105
19	Manico Poignee Handle Handgriff Manija	312328
20	Distanziale per aspo Entretoise pour support bobine Reel spacer Distanzstueck Espàciador por aspa	321210
21	Ruota Roue Wheel Rad Rueda	321390
22	Cornice Cadre Frame Rahmen Marco	322698
23	Protezione Protecion Cover Deckel Proteccion	322814
24	Assieme manopola per commutatore Set poigne pour commutateur Switch knob set Umschaltergriff set Set manjia para conmutador	323101
25	Staffa asse ruote Bride axe roue Wheel axel bracket Räderachsel bügel Estribo eje rueda	485953
26	Frontale Partie frontale Front panel Gerätefront Frontal	642901
27	Gancio appendi torcia Accrocheur torche Torch hook Haken fuer brenner Gancho fijacion antorcha	644444
28	Staffa portabombola Etrier porte-bouteille Bottle-holder bracket Kasten fuer flasche Estribo porta bombona	645673
29	Diaframma inferiore Diaphragme inferieur Lower diaphragm Unten diaphragma Diafragma inferior	645984
30	Diaframma superiore Diaphragme superieur Upper diaphragm Obere diaphragma Diafragma superior	645987
31	Asse per ruote Axe roues Wheels axle Radachse Eje ruedas	681092
32	Toledo 300 pinza di massa 300a Toledo 300 borne de masse 300a Toledo 300 work clamp 300a Toledo 300 masseklemme 300a Toledo 300 borne de masa 300a	712231
33	Rullino traino 4r ø 0.8fe-1.0fe "p-k" Galet 4r ø 0.8fe-1.0fe "p-k" Feed roll 4r ø 0.8fe-1.0fe "p-k" Vorschubrolle 4r ø 0.8fe-1.0fe "p-k" Roldana 4r ø 0.8fe-1.0fe "p-k"	722227
34	Rullino traino 4r ø 1.2fe-1.6fe "p-k" Galet 4r ø 1.2fe-1.6fe "p-k" Feed roll 4r ø 1.2fe-1.6fe "p-k" Vorschubrolle 4r ø 1.2fe-1.6fe "p-k" Roldana 4r ø 1.2fe-1.6fe "p-k"	722241
35	Attacco torcia Attelage torche Torch connection Brenneranschluss Enganche soplete	723229
36	Entrata guidafilo Entree guide fil Wire guide inlet Drahtfuehrungsseeleeingang Entrata vaina guiadera alambre	742064
37	Adattatore Adapteur Adapter Zahnrad Adaptador	742166
38	Mt25 torcia mig 3m Mt25 torche mig 3m Mt25 mig torch 3m Mt25 mig brenner 3m Mt25 antorcha mig 3m	742183
39	Ingranaggio motore Engrenage motor Motor drive gear Motorszahnrad Engranaje motor	742348
40	Tubo capillare ø 2x5 Tuyau capillaire ø 2x5 Wire conduit ø 2x5 Kapillarrohr ø 2x5 Tubo capilar ø 2x5	742365
41	Rullino traino 4r ø 1.0fe-1.2fe "p-k" Galet 4r ø 1.0fe-1.2fe "p-k" Feed roll 4r ø 1.0fe-1.2fe "p-k" Vorschubrolle 4r ø 1.0fe-1.2fe "p-k" Roldana 4r ø 1.0fe-1.2fe "p-k"	742366
42	Vite bloccarullino Vis ferme galet Rollerfixing screw Rollerhalterschraube Tornillo bloque roldana	742397
43	Rullino traino 4r ø0.6fe-0.8/0.9fe "p-k" Galet 4r ø 0.6fe-0.8/0.9fe "p-k" Feed roll 4r ø 0.6fe-0.8/0.9fe "p-k" Vorschubrolle 4r ø 0.6fe-0.8/0.9fe "p-k" Roldana 4r ø 0.6fe-0.8/0.9fe "p-k"	742576
44	Ingranaggio Engrenages Gears Zahnrad Engranaje	742590
45	Pinza portaelettrodo+ cavo 25mmq 4m ax50 Portelectrode+ cable 25mmq 4m pince ax50 Electrode holder + cable 25mmq 4m ax50 Elektrondehalter + kabel 25mmq 4m ax50 Pinca portaelectrodo+cable 25mmq 4m ax50	804123
46	Presa atlas 50mmq Prise atlas 50mmq Socket atlas 50mmq Steckdose atlas 50mmq Enchufe atlas 50mmq	804197
47	Spina atlas 50mmq Fiche atlas 50mmq Plug atlas 50mmq Stecker atlas 50mmq Enchufe atlas 50mmq	804200
48	Kit scheda filtro ingresso Kit platine filtre input Input filter card kit Input filterkarte kit Kit tarjeta filtro input	980947
49	Kit manopola encoder d.29 Kit poignee encoder d.29 Encoder knob kit d.29 Encodergriff kit d.29 Kit manija encoder d.29	980968
50	Kit aspo 15kg Kit support bobine 15kg Reel kit 15kg Wickler kit 15kg Kit aspa 15kg	981703
51	Kit autotrasfo Kit autotrasfo Autotrasfo kit Autotrasfo kit Kit autotrasfo	981869
52	Traino 4 rulli Devidoir 4 rouleaux 4 Roll wirefeeder 4 Räder drahtvorschub Alimendator de hilo 4 rodillos	981928
53	Ancora controrullino sinistra Ancre contre-galet gauche Left anchor for pressure roller Linker anker für gegenrolle Ancora izquierda para contra roldana	981929
54	Ancora controrullino destra Ancre contre-galet droit Right anchor for pressure roller Rechter anker für gegenrolle Ancora derecha para contra roldana	981930
55	Kit scheda primario completa Kit platine primaire complete Complete primary pcb kit Komplette primärtrafokarte kit Kit tarjeta primario completa	982474
56	Kit igbt Kit igbt Kit igbt Kit igbt Kit igbt	982477
57	Kit diodi Kit diodes Diodes kit Dioden kit Kit diodos	982478
58	Kit scheda secondario completa Kit platine secondaire complete Complete secondary pcb kit Komplette sekundärtrafokarte kit Kit tarjeta secundario completa	982535
59	Kit scheda pannello Kit platine frontal Front panel card kit Gerätefrontskarte kit Kit tarjeta frontal	982569
60	Kit scheda controllo Kit carte controle Control board kit Steuerungskarte kit Kit tarjeta control	982571
61	Kit fondo Kit chassis Bottom kit Bodenteil kit Kit fondo	982573
62	Kit ruote Kit roues Wheels kit Räderkit Kit ruedas	982577
63	Kit retro Kit partie arriere Back panel kit Rückseite kit Kit trasera	982579

REF.	ELENCO PEZZI DI RICAMBIO PIECES DETACHEES SPARE PARTS LIST ERSATZTEILLISTE PIEZAS DE REPUESTO	CODICE CODE KODE
64	Kit mantello Kit capot Cover kit Deckel kit Kit panel de cobertura	982581
65	Kit sportello Kit guichet Door kit Tür-kit Kit portezuela	982583
66	Kit guaina entrata motore Kit gaine entree moteur Gas hose kit Drahtfuehrungsseelekit Kit vaina guiadera alambre	990097

REF.	ELENCO PEZZI DI RICAMBIO PIECES DETACHEES SPARE PARTS LIST ERSATZTEILLISTE PIEZAS DE REPUESTO	CODICE CODE KODE

REF.	ELENCO PEZZI DI RICAMBIO PIECES DETACHEES SPARE PARTS LIST ERSATZTEILLISTE PIEZAS DE REPUESTO	CODICE CODE KODE

Schema elettrico, Schéma électrique, Diagram, Schaltplan, Esquema de conexiones.

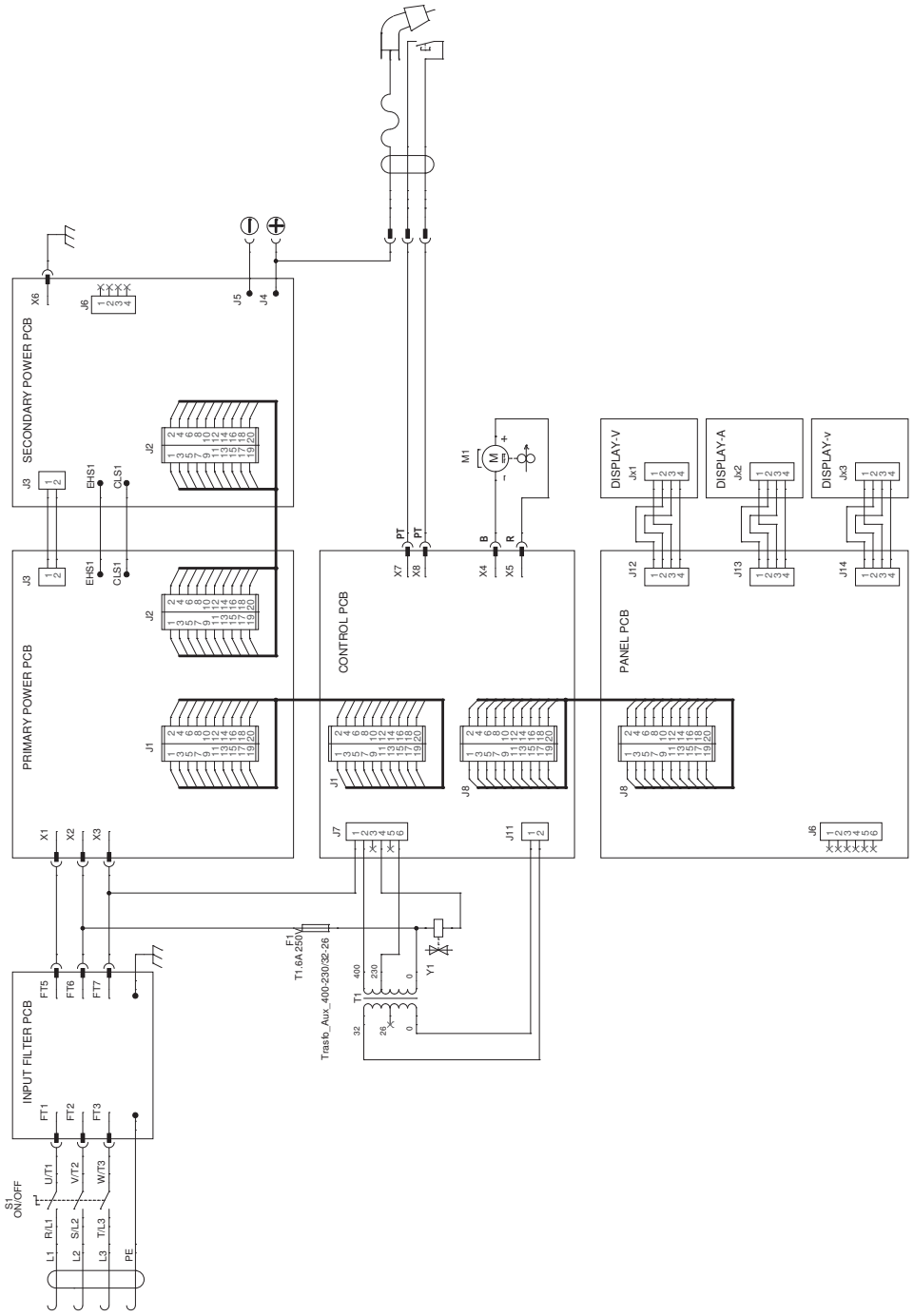

Esploso torcia, Dessin torche, Torch drawing, Schlauchpaket - Explosionszeichnung, Diseño seccionado antorcha.

742183 3m
742184 4m
742185 5m

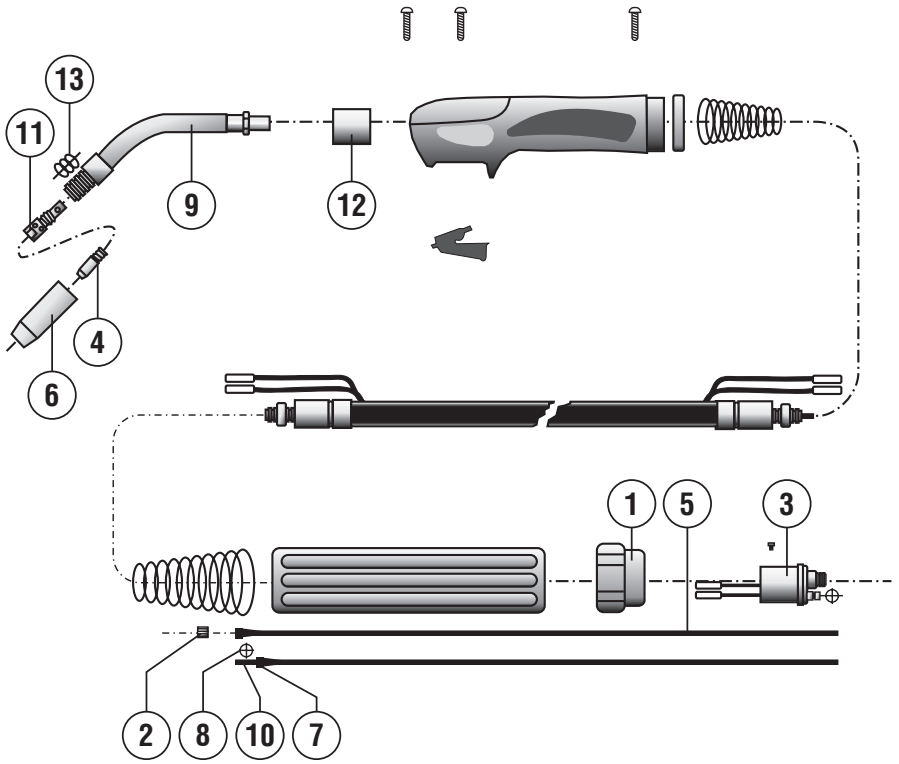

REF.	ELENCO PEZZI RICAMBIO TORCIA LISTE PIECES DETACHEES TORCHE SPARE PARTS LIST TORCH ERSATZTEILLISTE SCLAUCHPAKET PIEZAS DE REPUESTO ANTORCHA	CODICE CODE KODE
1	Ghiera fissaggio Embout fixage Ring nut Nutmutter Virola por fiyacion	722007
2	Dado fissaggio guaina Ecrou fixage gaine Liner nut Befestigungsmutter Dado por fiyacion vaina	722013
3	Corpo torcia Corp de torche Torch assy Brennerskörper Enganche antorcha	722441
4	Tubetto di contatto d. 1,2 Mm fe Tube contact d. 1,2 Mm fe Contact tip d. 1,2 Mm fe Kontaktdüse d. 1,2 Mm fe Tubito de contacto d. 1,2 Mm fe	722682
4	Tubetto di contatto d. 1 Mm fe m6 l=28mm Tube contact d. 1 Mm fe m6 l=28mm Contact tip d. 1 Mm fe m6 l=28mm Kontaktdüse d. 1 Mm fe m6 l=28mm Tubito de contacto d. 1 Mm fe m6 l=28mm	722681
4	Tubetto di contatto d. 0,8 Mm m6 Tube contact d. 0,8 Mm m6 Contact tip d. 0,8 Mm m6 Kontaktdüse d. 0,8 Mm m6 Tubito de contacto d. 0,8 Mm m6	722680
4	Tubetto di contatto d. 1,2 Mm al/flux m6 Tube contact d. 1,2 Mm al/flux m6 Contact tip d. 1,2 Mm al/flux m6 Kontaktdüse d. 1,2 Mm al/flux m6 Tubito de contacto d. 1,2 Mm al/flux m6	722553
4	Tubetto di contatto d. 1 Mm al/flux m6 Tube contact d. 1 Mm al/flux m6 Contact tip d. 1 Mm al/flux m6 Kontaktdüse d. 1 Mm al/flux m6 Tubito de contacto d. 1 Mm al/flux m6	722552
4	Tubetto di contatto d. 0,6 Mm fe Tube contact d. 0,6 Mm fe Contact tip d. 0,6 Mm fe Kontaktdüse d. 0,6 Mm fe Tubito de contacto d. 0,6 Mm fe	722415
5	Guaina guidafilo ø0.6-0.8 3m blu Gaine pour fil ø0.6-0.8 3m bleu Wire guide hose ø0.6-0.8 3m blue Drahtführungsseele ø0.6-0.8 3m blue Vaina guia hilo ø0.6-0.8 3m blue	722437
5	Guaina guidafilo ø1.0-1.2 3m rossa Gaine pour fil ø1.0-1.2 3m rouge Wire guide hose ø1.0-1.2 3m red Drahtführungsseele ø1.0-1.2 3m rot Vaina guia hilo ø1.0-1.2 3m roja	722689
5	Guaina guidafilo ø1.0-1.2 4m al Gaine pour fil ø 1.0-1.2 4m al Wire guide hose ø 1.0-1.2 4m al Drahtführungsseele ø 1.0-1.2 4m al Vaina guia hilo ø 1.0-1.2 4m al	742984

REF.	ELENCO PEZZI RICAMBIO TORCIA LISTE PIECES DETACHEES TORCHE SPARE PARTS LIST TORCH ERSATZTEILLISTE SCLAUCHPAKET PIEZAS DE REPUESTO ANTORCHA	CODICE CODE KODE
6	Ugello cilindrico mt25 Buse cylindrique mt25 Cylindrical nozzle mt25 Zylindrische düse mt25 Inyector cilindrico mt25	722684
6	Ugello conico mt25 Buse conique mt25 Conical nozzle mt25 Konische düse mt25 Inyector conico mt25	722685
6	Ugello testa fine mt25 Buse a tete fine mt25 Thin headed nozzle mt25 Verengte düse mt25 Inyector cabeza fina mt25	722686
6	Ugello per puntatura d. 18 Mm Buse pointage d. 18 Mm Spot welding nozzle d. 18 Mm Punktschweissgasdüse d. 18 Mm Inyector por puntos d. 18 Mm	722687
7	Nipples ferma guaina Nipples serre gaine Wire guide locking nipples Drahtseeleklemmnipples Nipples de bloqueo vaina	722598
8	Anello or Bague or Or ring Or ring Anillo or	722601
8	Anello or Anneau or Or ring Or ring Anillo or	722606
9	Lancia mt25 Lance mt25 Swan neck mt25 Brennerhals mt25 Encorvado mt25	722696
10	Tubetto ferma guaina Tuyau serre gaine Wire guide locking tube Drahtseeleklemmrohr Tubito de bloqueo vaina	722600
11	Diffusore gas mt25 Diffuseur gaz mt25 Gas diffuser mt25 Gasdiffusor mt25 Diffusor gas mt25	722688
12	Isolante corpo torcia Isolant corps de torche Torch connection insulation Brenneranschlussblock isolierteil Aislador cuerpo de antorcha	722693
13	Molla per ugello mt25 Ressort pour buse mt25 Nozzle spring mt25 Düsenfeder mt25 Muelle por inyector mt25	722690

REF.	ELENCO PEZZI RICAMBIO TORCIA LISTE PIECES DETACHEES TORCHE SPARE PARTS LIST TORCH ERSATZTEILLISTE SCLAUCHPAKET PIEZAS DE REPUESTO ANTORCHA	CODICE CODE KODE

ELENCO PEZZI DI RICAMBIO
LISTE PIECES DETACHEES
SPARE PARTS LIST
ERSATZTEILLISTE
PIEZAS DE REPUESTO

MASTERMIG 405i

TELWIN®

Esploso macchina, Dessin appareil, Machine drawing, Explosions Zeichnung des Geräts, Diseño seccionado maquina.

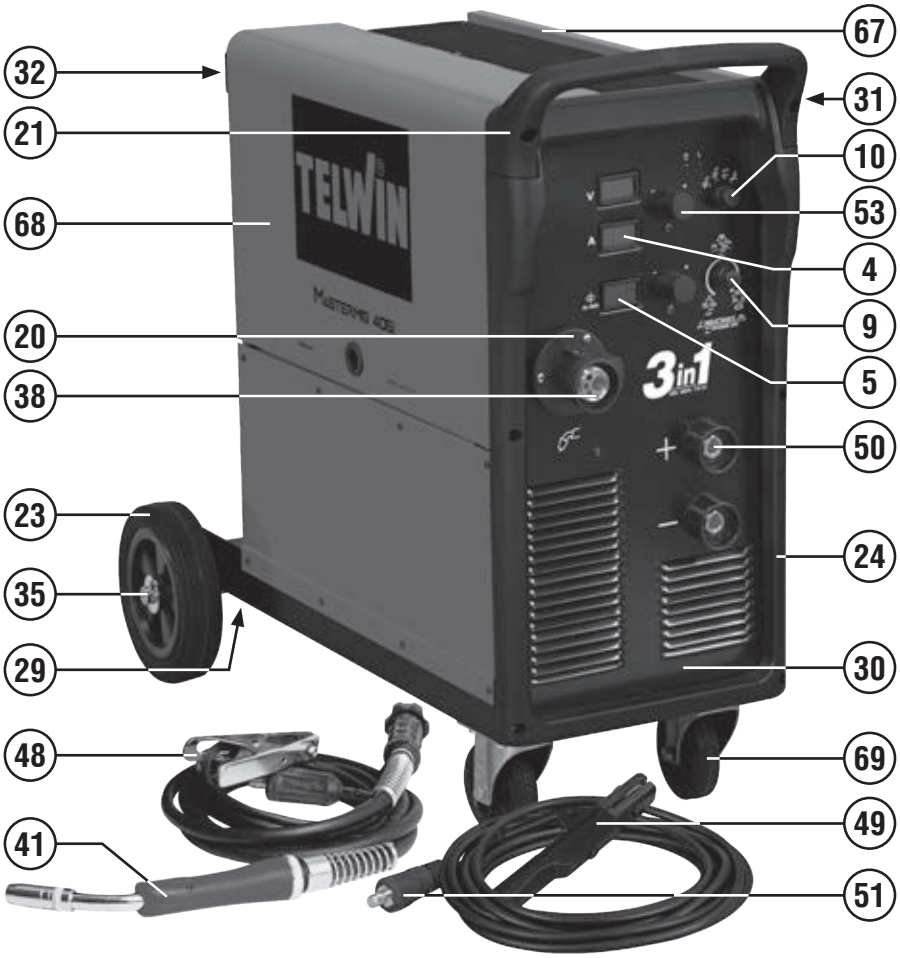

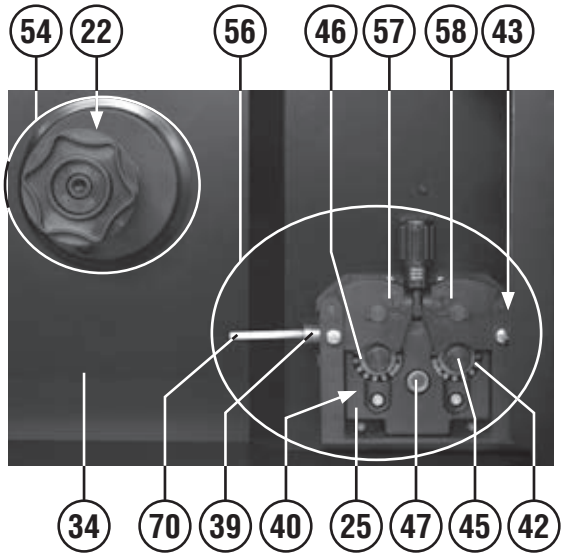

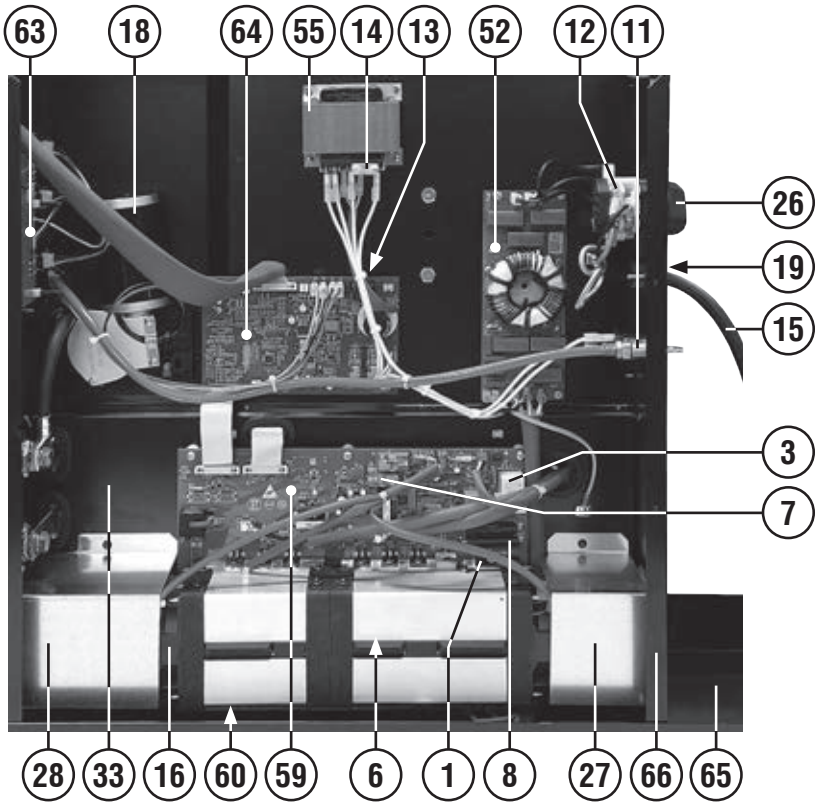

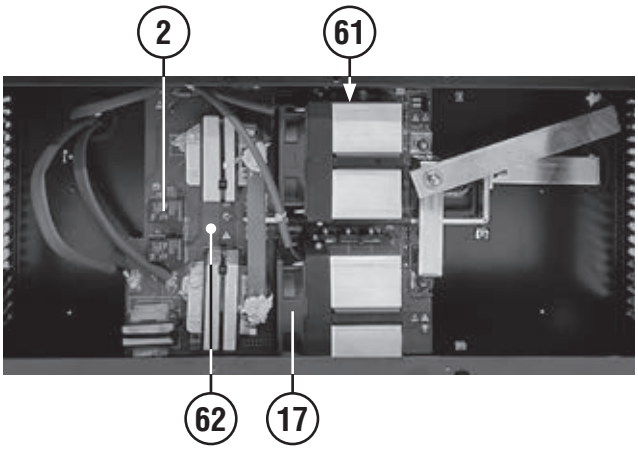

REF.	ELENCO PEZZI DI RICAMBIO PIECES DETACHEES SPARE PARTS LIST ERSATZTEILLISTE PIEZAS DE REPUESTO	CODICE CODE KODE
1	Ponte monofase Pont monophase Single phase bridge Einfasige brücke Puente monofasico	111017
2	Rele Relais Relais Relais Conectador	111211
3	Rele' Relais Relais Relais Conectador	111252
4	Kit display linear Kit display linear Kit display linear Kit display linear Kit display linear	112003
5	Assieme display 3 digit + punto Set affichage 3 digit + point Display set - 3 digit + point Tafel set - 3 digit + punkt Set pantalla 3 digit + punto	112032
6	Condensatore Condensateur Capacitor Kondensator Condensador	113122
7	Rele' Relais Relais Relais Relais	116320
8	Res. Met. 10r 2w 5% fuse Res. Met. 10r 2w 5% fuse Res. Met. 10r 2w 5% fuse Res. Met. 10r 2w 5% fuse Res. Met. 10r 2w 5% fuse	116962
9	Manopola Poigne Knob Griff Manjia	121394
10	Manopola Poignee Knob Griff Manija	121751
11	Elettrovalvola Electrovanne Electrovalve Elektroventil Electrovalvula	121800
12	Commutatore Commutateur Switch Schalter Conmutador	122017
13	Fusibile Fusible Fuse Sicherung Fusible	122434
14	Fusibile Fusible Fuse Sicherung Fusible	122879
15	Cavo alim. 4g4 2 m Cable alim. 4g4 2 m Mains cable 4g4 2 m Netzkabel 4g4 2 m Cable alim. 4g4 2 m	132206
16	Ventilatore 12vdc 92x 92x25 Ventilateur 12vdc 92x 92x25 Fan 12vdc 92x 92x25 Ventilator 12vdc 92x 92x25 Ventilador 12vdc 92x 92x25	152361
17	Ventilatore Ventilateur Fan Ventilator Ventilador	152904
18	Motore Moteur Motor Motor Motor	153033
19	Pressacavo Presse cable Cable bushing Kabelhalter Prensa cable	312068
20	Protezione attacco torcia Support isolant torche Torch connection protection Brennersisolierlager Sosten isolator antorcha	312105
21	Manico Poignee Handle Handgriff Manija	312328
22	Distanziale per aspo Entretoise pour support bobine Reel spacer Distanzstueck Espàciador por aspa	321210
23	Ruota Roue Wheel Rad Rueda	321390
24	Cornice Cadre Frame Rahmen Marco	322698
25	Protezione Protecion Cover Deckel Proteccion	322814
26	Assieme manopola per commutatore Set poigne pour commutateur Switch knob set Umschaltergriff set Set manjia para conmutador	323101
27	Convogliatore Conveyeur Conveyor Lüfterabdeckung Conveyor	485893
28	Convogliatore Conveyors Conveyor Konvektor Conductor	485952
29	Staffa asse ruote Bride axe roue Wheel axel bracket Räderachsel bügel Estribo eje rueda	485953
30	Frontale Partie frontale Front panel Gerätefront Frontal	642901
31	Gancio appendi torcia Accrocheur torche Torch hook Haken fuer brenner Gancho fijacion antorcha	644444
32	Staffa portabombola Etrier porte-bouteille Bottle-holder bracket Kasten fuer flasche Estribo porta bombona	645673
33	Diaframma inferiore Diaphragme inferieur Lower diaphragm Unten diaphragma Diafragma inferior	645984
34	Diaframma superiore Diaphragme superieur Upper diaphragm Obere diaphragma Diafragma superior	645987
35	Asse per ruote Axe roues Wheels axle Radachse Eje ruedas	681092
36	Rullino traino 4r ø 0.8fe-1.0fe "p-k" Galet 4r ø 0.8fe-1.0fe "p-k" Feed roll 4r ø 0.8fe-1.0fe "p-k" Vorschubrolle 4r ø 0.8fe-1.0fe "p-k" Roldana 4r ø 0.8fe-1.0fe "p-k"	722227
37	Rullino traino 4r ø 1.2fe-1.6fe "p-k" Galet 4r ø 1.2fe-1.6fe "p-k" Feed roll 4r ø 1.2fe-1.6fe "p-k" Vorschubrolle 4r ø 1.2fe-1.6fe "p-k" Roldana 4r ø 1.2fe-1.6fe "p-k"	722241
38	Attacco torcia Attelage torche Torch connection Brenneranschluss Enganche soplete	723229
39	Entrata guidafilo Entree guide fil Wire guide inlet Drahtfuehrungsseeleeingang Entrata vaina guiadera alambre	742064
40	Adattatore Adapteur Adapter Zahnrad Adaptador	742166
41	Mt36 torcia mig 3m Mt36 torche mig 3m Mt36 mig torch 3m Mt36 mig brenner 3m Mt36 antorcha mig 3m	742186
42	Ingranaggio motore Engrenage motor Motor drive gear Motorszahnrad Engranaje motor	742348
43	Tubo capillare ø 2x5 Tuyau capillaire ø 2x5 Wire conduit ø 2x5 Kapillarrohr ø 2x5 Tubo capilar ø 2x5	742365
44	Rullino traino 4r ø 1.0fe-1.2fe "p-k" Galet 4r ø 1.0fe-1.2fe "p-k" Feed roll 4r ø 1.0fe-1.2fe "p-k" Vorschubrolle 4r ø 1.0fe-1.2fe "p-k" Roldana 4r ø 1.0fe-1.2fe "p-k"	742366
45	Vite bloccarullino Vis ferme galet Rollerfixing screw Rollerhalterschraube Tornillo bloque roldana	742397
46	Rullino traino 4r ø0.6fe-0.8/0.9fe "p-k" Galet 4r ø 0.6fe-0.8/0.9fe "p-k" Feed roll 4r ø 0.6fe-0.8/0.9fe "p-k" Vorschubrolle 4r ø 0.6fe-0.8/0.9fe "p-k" Roldana 4r ø 0.6fe-0.8/0.9fe "p-k"	742576
47	Ingranaggio Engrenages Gears Zahnrad Engranaje	742590
48	Toledo 400 pinza di massa 400a bl Toledo 400 pince de masse 400a bl Toledo 400 work clamp 400a bl Toledo 400 massеklemme 400a bl Toledo 400 pinza de masa 400a bl	802534
49	Pinza portaelettrodo+ cavo 35mmq 4m ax50 Pince portelectrode+ cable 35mmq 4m ax50 Electrode holder + cable 35mmq 4m ax50 Elektrondehalter + kabel 35mmq 4m ax50 Pinca portaelectrodo+cable 35mmq 4m ax50	804124
50	Presa atlas 50mmq Prise atlas 50mmq Socket atlas 50mmq Steckdose atlas 50mmq Enchufe atlas 50mmq	804197
51	Spina atlas 50mmq Fiche atlas 50mmq Plug atlas 50mmq Stecker atlas 50mmq Enchufe atlas 50mmq	804200
52	Kit scheda filtro ingresso Kit platine filtre input Input filter card kit Input filterkarte kit Kit tarjeta filtro input	980947
53	Kit manopola encoder d.29 Kit poignee encoder d.29 Encoder knob kit d.29 Encodergriff kit d.29 Kit manija encoder d.29	980968
54	Kit aspo 15kg Kit support bobine 15kg Reel kit 15kg Wickler kit 15kg Kit aspa 15kg	981703
55	Kit autotrasfo Kit autotrasfo Autotrasfo kit Autotrasfo kit Kit autotrasfo	981869
56	Traino 4 rulli Devidoir 4 rouleaux 4 Roll wirefeeder 4 Räder drahtvorschub Alimendator de hilo 4 rodillos	981928
57	Ancora controrullino sinistra Ancre contre-galet gauche Left anchor for pressure roller Linker anker für gegenrolle Ancora izquierda para contra roldana	981929
58	Ancora controrullino destra Ancre contre-galet droit Right anchor for pressure roller Rechter anker für gegenrolle Ancora derecha para contra roldana	981930
59	Kit scheda primario Kit platine primaire Kit primary control pcb Kit primärsteurungskarte Kit tarjeta primario	982460
60	Kit igbt Kit igbt Kit igbt Kit igbt Kit igbt	982463
61	Kit diodi Kit diodes Diodes kit Dioden kit Kit diodos	982464
62	Kit scheda secondario completa Kit platine secondaire complete Complete secondary pcb kit Komplette sekundärtrafokarte kit Kit tarjeta secundario completa	982536
63	Kit scheda pannello Kit platine frontal Front panel card kit Gerätefrontskarte kit Kit tarjeta frontal	982569

REF.	ELENCO PEZZI DI RICAMBIO PIECES DETACHEES SPARE PARTS LIST ERSATZTEILLISTE PIEZAS DE REPUESTO	CODICE CODE KODE
64	Kit scheda controllo Kit carte controle Control board kit Steuerungskarte kit Kit tarjeta control	982570
65	Kit fondo Kit chassis Bottom kit Bodenteil kit Kit fondo	982573
66	Kit retro Kit partie arriere Back panel kit Rückseite kit Kit trasera	982574
67	Kit mantello Kit capot Cover kit Deckel kit Kit panel de cobertura	982575
68	Kit sportello Kit guichet Door kit Tür-kit Kit portezuela	982576

REF.	ELENCO PEZZI DI RICAMBIO PIECES DETACHEES SPARE PARTS LIST ERSATZTEILLISTE PIEZAS DE REPUESTO	CODICE CODE KODE
69	Kit ruote Kit roues Wheels kit Räderkit Kit ruedas	982577
70	Kit guaina entrata motore Kit gaine entree moteur Gas hose kit Drahtfuehrungsseelekit Kit vaina guiadera alambre	990097

REF.	ELENCO PEZZI DI RICAMBIO PIECES DETACHEES SPARE PARTS LIST ERSATZTEILLISTE PIEZAS DE REPUESTO	CODICE CODE KODE

Schema elettrico, Schéma électrique, Diagram, Schaltplan, Esquema de conexiones.

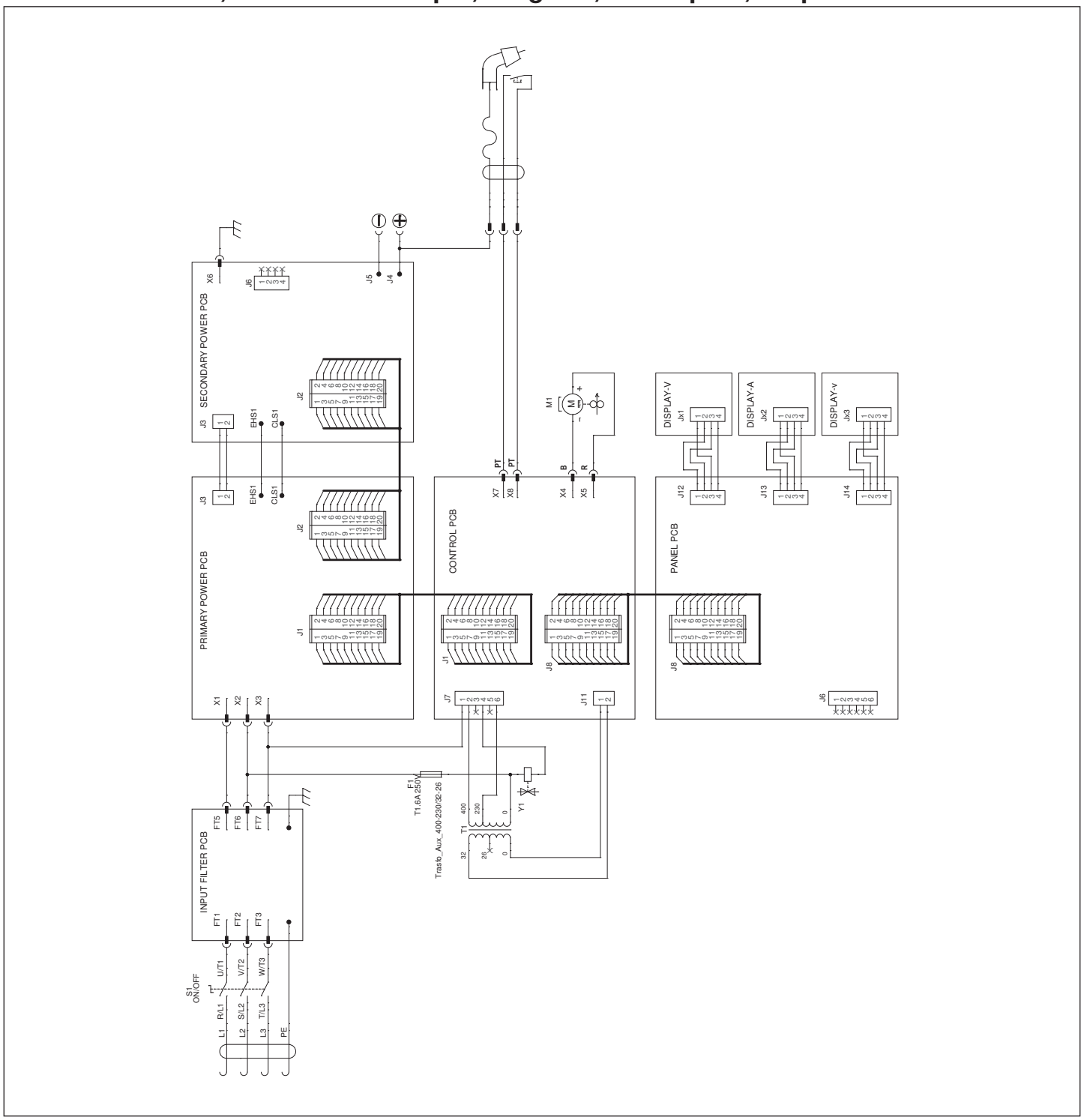

Esploso torcia, Dessin torche, Torch drawing, Schlauchpaket - Explosionszeichnung, Diseño seccionado antorcha.

742186 3m
742187 4m
742188 5m

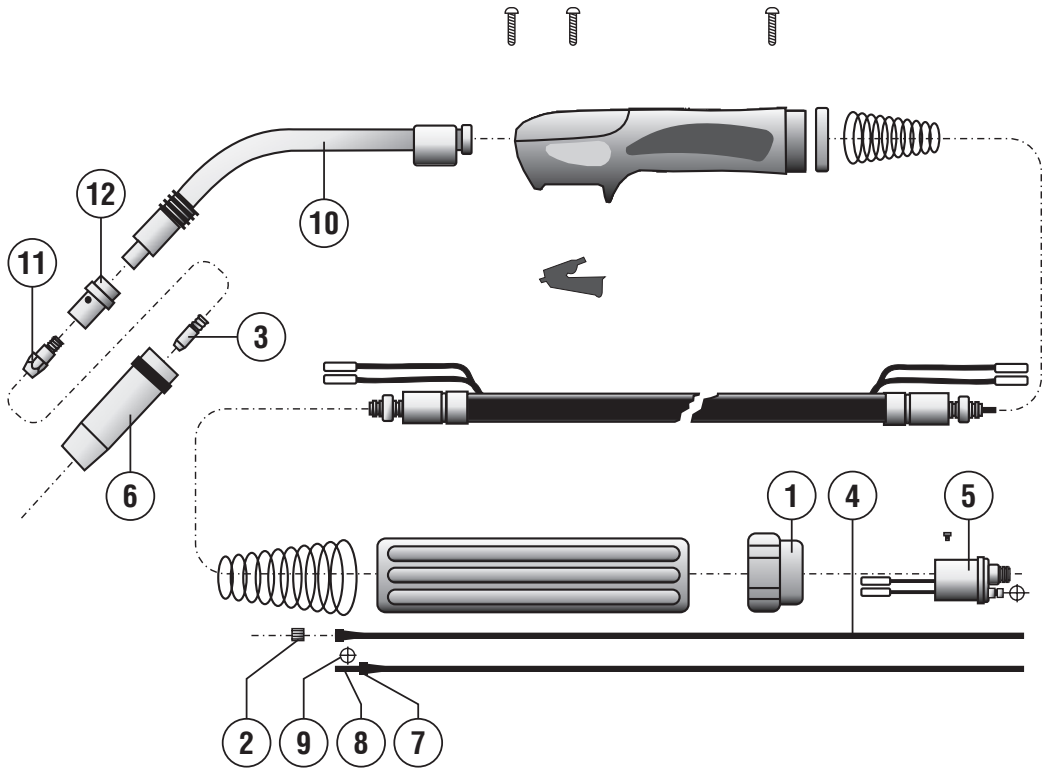

REF.	ELENCO PEZZI RICAMBIO TORCIA LISTE PIECES DETACHEES TORCHE SPARE PARTS LIST TORCH ERSATZTEILLISTE SCLAUCHPAKET PIEZAS DE REPUESTO ANTORCHA	CODICE CODE KODE
1	Ghiera fissaggio Embout fixage Ring nut Nutmutter Virola por fiyacion	722007
2	Dado fissaggio guaina Ecrou fixage gaine Liner nut Befestigungsmutter Dado por fiyacion vaina	722013
3	Tubetto di contatto d. 1,6 Mm al/flux m6 Tube contact d. 1,6 Mm al/flux m6 Contact tip d. 1,6 Mm al/flux m6 Kontaktdüse d. 1,6 Mm al/flux m6 Tubito de contacto d. 1,6 Mm al/flux m6	722818
3	Tubetto di contatto d. 1,6 Mm fe Tube contact d. 1,6 Mm fe Contact tip d. 1,6 Mm fe Kontaktroehrchen d. 1,6 Mm fe Tubito de contacto d. 1,6 Mm fe	722797
3	Tubetto di contatto d. 1,2 Mm fe Tube contact d. 1,2 Mm fe Contact tip d. 1,2 Mm fe Kontaktdüse d. 1,2 Mm fe Tubito de contacto d. 1,2 Mm fe	722682
3	Tubetto di contatto d. 1 Mm fe m6 l=28mm Tube contact d. 1 Mm fe m6 l=28mm Contact tip d. 1 Mm fe m6 l=28mm Kontaktdüse d. 1 Mm fe m6 l=28mm Tubito de contacto d. 1 Mm fe m6 l=28mm	722681
3	Tubetto di contatto d. 0,8 Mm m6 Tube contact d. 0,8 Mm m6 Contact tip d. 0,8 Mm m6 Kontaktdüse d. 0,8 Mm m6 Tubito de contacto d. 0,8 Mm m6	722680
3	Tubetto di contatto d. 1,2 Mm al/flux m6 Tube contact d. 1,2 Mm al/flux m6 Contact tip d. 1,2 Mm al/flux m6 Kontaktdüse d. 1,2 Mm al/flux m6 Tubito de contacto d. 1,2 Mm al/flux m6	722553
3	Tubetto di contatto d. 1 Mm al/flux m6 Tube contact d. 1 Mm al/flux m6 Contact tip d. 1 Mm al/flux m6 Kontaktdüse d. 1 Mm al/flux m6 Tubito de contacto d. 1 Mm al/flux m6	722552
3	Tubetto di contatto d. 0,6 Mm fe Tube contact d. 0,6 Mm fe Contact tip d. 0,6 Mm fe Kontaktdüse d. 0,6 Mm fe Tubito de contacto d. 0,6 Mm fe	722415
4	Guaina guidafilo ø1.0-1.2 3m rossa Gaine pour fil ø1.0-1.2 3m rouge Wire guide hose ø1.0-1.2 3m red Drahtführungsseele ø1.0-1.2 3m rot Vaina guia hilo ø1.0-1.2 3m roja	722689
4	Guaina guidafilo ø0.6-0.8 3m blu Gaine pour fil ø0.6-0.8 3m bleu Wire guide hose ø0.6-0.8 3m blue Drahtführungsseele ø0.6-0.8 3m blue Vaina guia hilo ø0.6-0.8 3m blue	722437

REF.	ELENCO PEZZI RICAMBIO TORCIA LISTE PIECES DETACHEES TORCHE SPARE PARTS LIST TORCH ERSATZTEILLISTE SCLAUCHPAKET PIEZAS DE REPUESTO ANTORCHA	CODICE CODE KODE
4	Guaina guidafilo ø1.2-1.6 4m al Gaine pour fil ø1.2-1.6 4m al Wire guide hose ø1.2-1.6 4m al Drahtführungsseele ø1.2-1.6 4m al Vaina guia hilo ø1.2-1.6 4m al	742811
4	Guaina guidaf. Ø1.0-1.2 4m al Gaine pour fil ø1.0-1.2 4m al Wire guide hose ø1.0-1.2 4m al Drahtführungsseele ø1.0-1.2 4m al Vaina guia hilo ø1.0-1.2 4m al	742812
5	Corpo torcia Corp de torche Torch assy Brennerskörper Enganche antorcha	722441
6	Ugello conico mt36 Buse conique mt36 Conical nozzle mt36 Konische düse mt36 Inyector conico mt36	722792
6	Ugello testa fine mt36 Buse a tete fine mt36 Thin headed nozzle mt36 Verengte düse mt36 Inyector cabeza fina mt36	722793
6	Ugello puntatura Buse pour pointage Spot welding nozzle Punktschweissdüse Inyector por puntos	722794
7	Nipples ferma guaina Nipples serre gaine Wire guide locking nipples Drahtseeleklemmnipples Nipples de bloqueo vaina	722598
7	Nipples ferma guaina Nipples serre gaine Wire guide locking nipples Drahtseeleklemmnipples Nipples de bloqueo vaina	722599
8	Tubetto ferma guaina Tuyau serre gaine Wire guide locking tube Drahtseeleklemmrohr Tubito de bloqueo vaina	722600
9	Anello or Bague or Or ring Or ring Anillo or	722601
9	Anello or Anneau or Or ring Or ring Anillo or	722606
10	Lancia mt36 Lance mt36 Swan neck mt36 Brennerhals mt36 Encorvado mt36	722788

REF.	ELENCO PEZZI RICAMBIO TORCIA LISTE PIECES DETACHEES TORCHE SPARE PARTS LIST TORCH ERSATZTEILLISTE SCLAUCHPAKET PIEZAS DE REPUESTO ANTORCHA	CODICE CODE KODE
11	Supporto tubetto contatto mt36 Support tube contact mt36 Contact tip holder mt36 Kontaktröhrchen träger mt36 Sosten tubito de contacto mt36	722789
12	Diffusore gas isolante mt 36 Diffuseur gaz isolant mt 36 Insulating gas diffuser mt 36 Isolierte gas diffusor mt 36 Difusor gas aislante mt 36	722791

ELENCO PEZZI DI RICAMBIO
LISTE PIECES DETACHEES
SPARE PARTS LIST
ERSATZTEILLISTE
PIEZAS DE REPUESTO

SUPERMIG 350i

Esploso macchina, Dessin appareil, Machine drawing, Explosions Zeichnung des Geräts, Diseño seccionado maquina.



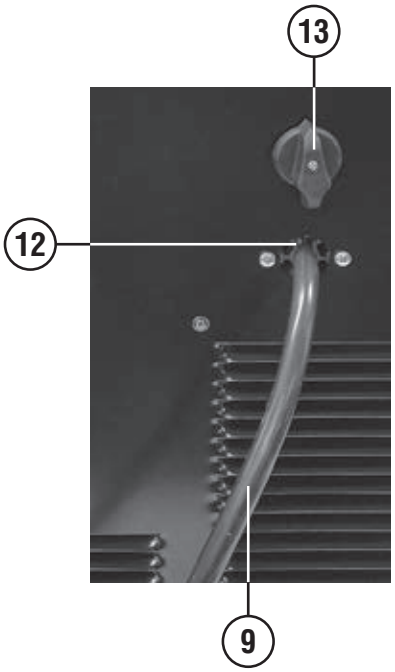

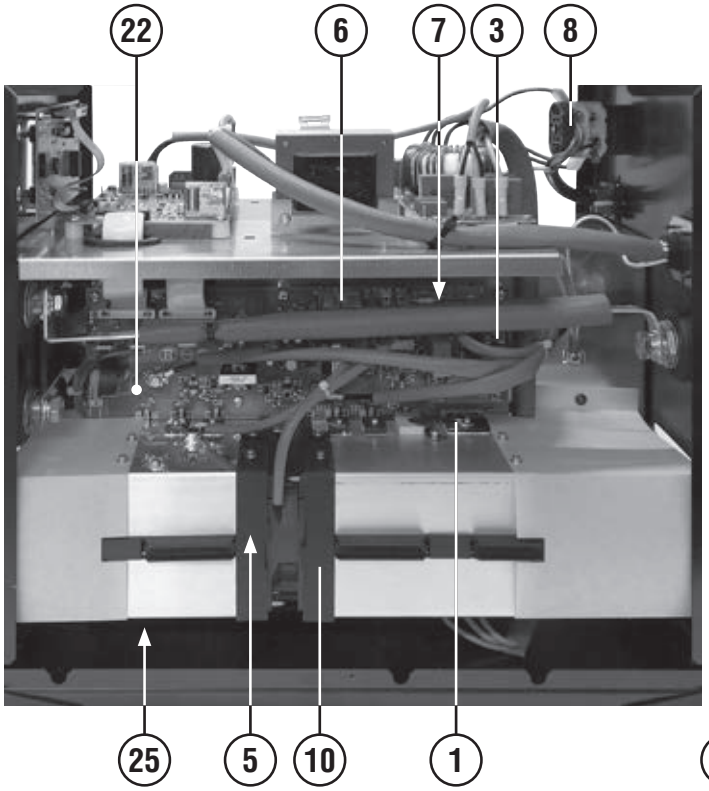

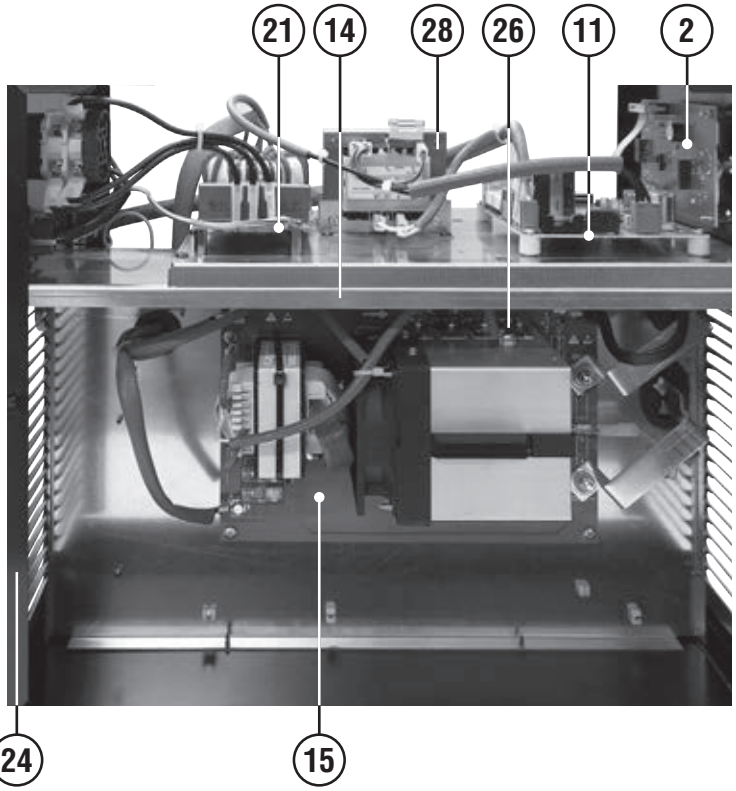

REF.	ELENCO PEZZI DI RICAMBIO PIECES DETACHEES SPARE PARTS LIST ERSATZTEILLISTE PIEZAS DE REPUESTO	CODICE CODE KODE
1	Ponte monofase Pont monophase Single phase bridge Einfasige brücke Puente monofasico	111017
2	Kit scheda display Kit platine affichage Display board kit Tafel karte kit Kit tarjeta pantalla	982539
3	Rele' Relais Relais Relais Conectador	111252
4	Manopola Poignee Knob Griff Manija	121751
5	Condensatore Condensateur Capacitor Kondensator Condensador	113122
6	Rele' Relais Relais Relais Relais	116320
7	Res. Met. 10r 2w 5% fuse Res. Met. 10r 2w 5% fuse Res. Met. 10r 2w 5% fuse Res. Met. 10r 2w 5% fuse Res. Met. 10r 2w 5% fuse	116962
8	Commutatore Commutateur Switch Schalter Conmutador	122017
9	Cavo alim. 4g2.5 2 M Cable alim. 4g2.5 2 M Mains cable 4g2.5 2 M Netzkabel 4g2.5 2 M Cable alim. 4g2.5 2 M	132244
10	Ventilatore 12vdc 92x 92x25 Ventilateur 12vdc 92x 92x25 Fan 12vdc 92x 92x25 Ventilator 12vdc 92x 92x25 Ventilador 12vdc 92x 92x25	152361
11	Kit scheda controllo Kit platine de controle Control pcb kit Kontrollekarte kit Kit tarjeta de controlo	982537
12	Pressacavo Presse cable Cable bushing Kabelhalter Prensa cable	312068
13	Assieme manopola per commutatore Set poigne pour commutateur Switch knob set Umschaltergriff set Set manjia para conmutador	323101
14	Diaframma Diaphragme Diaphragm Diaphragma Diafragma	485481
15	Kit scheda secondario completa Kit platine secondaire complete Complete secondary pcb kit Komplette sekundärtrafokarte kit Kit tarjeta secundario completa	982535
16	Fondo Chassis Bottom Bodenteil Fondo	645965
17	Mantello Capot Cover Deckel Panel de cobertura	651276
18	Fianco Partie laterale Side panel Seitenblech Flanco	656322
19	Presa atlas 50mmq Prise atlas 50mmq Socket atlas 50mmq Steckdose atlas 50mmq Enchufe atlas 50mmq	804197
20	Kit manopola encoder d.29 Kit poignee encoder d.29 Encoder knob kit d.29 Encodergriff kit d.29 Kit manija encoder d.29	982070
21	Kit scheda filtro ingresso Kit platine filtre input Input filter card kit Input filterkarte kit Kit tarjeta filtro input	980947

REF.	ELENCO PEZZI DI RICAMBIO PIECES DETACHEES SPARE PARTS LIST ERSATZTEILLISTE PIEZAS DE REPUESTO	CODICE CODE KODE
22	Kit scheda primario completa Kit platine primaire complete Complete primary pcb kit Komplette primärtrafokarte kit Kit tarjeta primario completa	982474
23	Kit frontale Kit partie frontal Front panel kit Gerätefront kit Kit frontal	982531
24	Kit retro Kit partie arriere Back panel kit Rückseite kit Kit trasera	982532
25	Kit igbt Kit igbt Kit igbt Kit igbt Kit igbt	982477
26	Kit diodi Kit diodes Diodes kit Dioden kit Kit diodos	982478
27	Kit piedini Kit embouts Feet kit Fuss kit Kit pies	982468
28	Kit autotrasfo Kit autotrasfo Autotrasfo kit Autotrasfo kit Kit autotrasfo	981869
29	Kit manico Kit poignee Handle kit Handgriff kit Kit manija	982467

REF.	ELENCO PEZZI DI RICAMBIO PIECES DETACHEES SPARE PARTS LIST ERSATZTEILLISTE PIEZAS DE REPUESTO	CODICE CODE KODE

Schema elettrico, Schéma électrique, Diagram, Schaltplan, Esquema de conexiones.

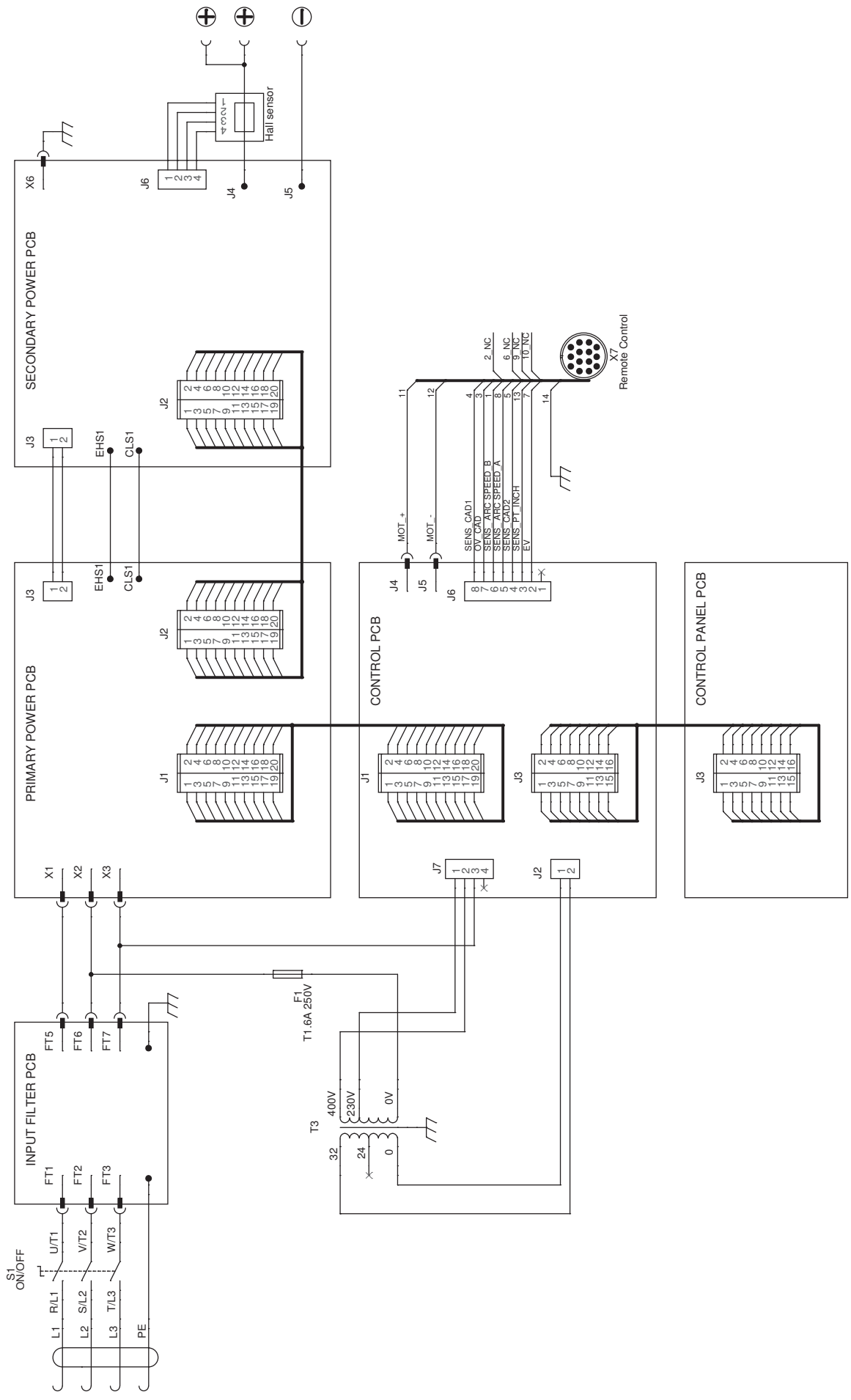

Esploso torcia, Dessin torche, Torch drawing, Schlauchpaket - Explosionszeichnung, Diseño seccionado antorcha.

742183 3m
742184 4m
742185 5m

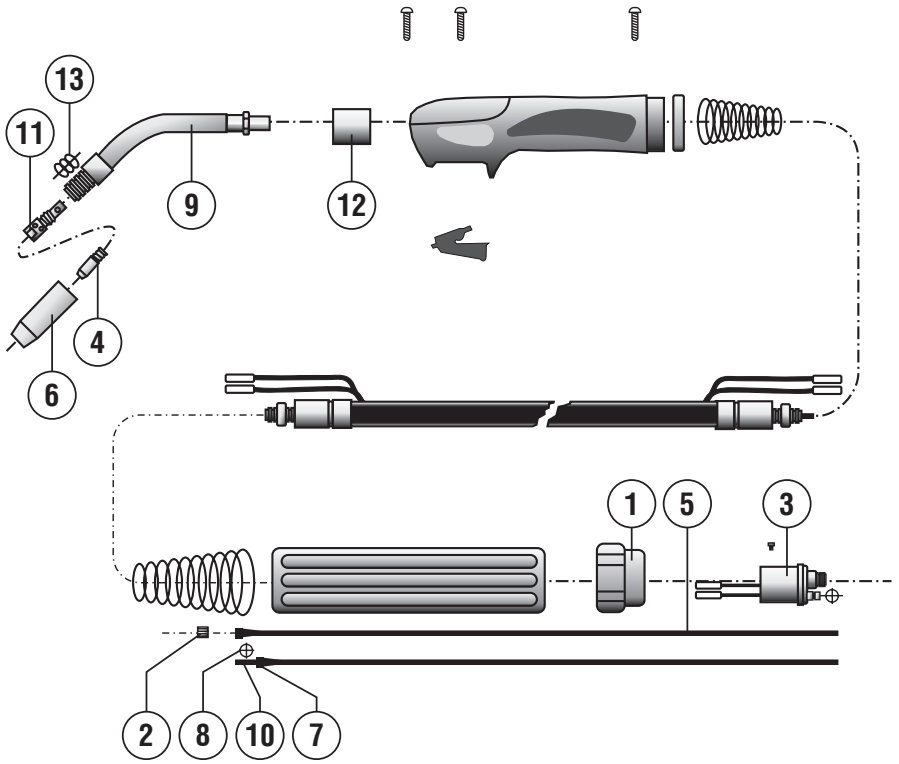

REF.	ELENCO PEZZI RICAMBIO TORCIA LISTE PIECES DETACHEES TORCHE SPARE PARTS LIST TORCH ERSATZTEILLISTE SCLAUCHPAKET PIEZAS DE REPUESTO ANTORCHA	CODICE CODE KODE
1	Ghiera fissaggio Embout fixage Ring nut Nutmutter Virola por fiyacion	722007
2	Dado fissaggio guaina Ecrou fixage gaine Liner nut Befestigungsmutter Dado por fiyacion vaina	722013
3	Corpo torcia Corp de torche Torch assy Brennerskörper Enganche antorcha	722441
4	Tubetto di contatto d. 1,2 Mm fe Tube contact d. 1,2 Mm fe Contact tip d. 1,2 Mm fe Kontaktdüse d. 1,2 Mm fe Tubito de contacto d. 1,2 Mm fe	722682
4	Tubetto di contatto d. 1 Mm fe m6 l=28mm Tube contact d. 1 Mm fe m6 l=28mm Contact tip d. 1 Mm fe m6 l=28mm Kontaktdüse d. 1 Mm fe m6 l=28mm Tubito de contacto d. 1 Mm fe m6 l=28mm	722681
4	Tubetto di contatto d. 0,8 Mm m6 Tube contact d. 0,8 Mm m6 Contact tip d. 0,8 Mm m6 Kontaktdüse d. 0,8 Mm m6 Tubito de contacto d. 0,8 Mm m6	722680
4	Tubetto di contatto d. 1,2 Mm al/flux m6 Tube contact d. 1,2 Mm al/flux m6 Contact tip d. 1,2 Mm al/flux m6 Kontaktdüse d. 1,2 Mm al/flux m6 Tubito de contacto d. 1,2 Mm al/flux m6	722553
4	Tubetto di contatto d. 1 Mm al/flux m6 Tube contact d. 1 Mm al/flux m6 Contact tip d. 1 Mm al/flux m6 Kontaktdüse d. 1 Mm al/flux m6 Tubito de contacto d. 1 Mm al/flux m6	722552
4	Tubetto di contatto d. 0,6 Mm fe Tube contact d. 0,6 Mm fe Contact tip d. 0,6 Mm fe Kontaktdüse d. 0,6 Mm fe Tubito de contacto d. 0,6 Mm fe	722415
5	Guaina guidafilo ø0.6-0.8 3m blu Gaine pour fil ø0.6-0.8 3m bleu Wire guide hose ø0.6-0.8 3m blue Drahtführungsseele ø0.6-0.8 3m blue Vaina guia hilo ø0.6-0.8 3m blue	722437
5	Guaina guidafilo ø1.0-1.2 3m rossa Gaine pour fil ø1.0-1.2 3m rouge Wire guide hose ø1.0-1.2 3m red Drahtführungsseele ø1.0-1.2 3m rot Vaina guia hilo ø1.0-1.2 3m roja	722689
5	Guaina guidafilo ø1.0-1.2 4m al Gaine pour fil ø 1.0-1.2 4m al Wire guide hose ø 1.0-1.2 4m al Drahtführungsseele ø 1.0-1.2 4m al Vaina guia hilo ø 1.0-1.2 4m al	742984

REF.	ELENCO PEZZI RICAMBIO TORCIA LISTE PIECES DETACHEES TORCHE SPARE PARTS LIST TORCH ERSATZTEILLISTE SCLAUCHPAKET PIEZAS DE REPUESTO ANTORCHA	CODICE CODE KODE
6	Ugello cilindrico mt25 Buse cylindrique mt25 Cylindrical nozzle mt25 Zylindrische düse mt25 Inyector cilindrico mt25	722684
6	Ugello conico mt25 Buse conique mt25 Conical nozzle mt25 Konische düse mt25 Inyector conico mt25	722685
6	Ugello testa fine mt25 Buse a tete fine mt25 Thin headed nozzle mt25 Verengte düse mt25 Inyector cabeza fina mt25	722686
6	Ugello per puntatura d. 18 Mm Buse pointage d. 18 Mm Spot welding nozzle d. 18 Mm Punktschweissgasdüse d. 18 Mm Inyector por puntos d. 18 Mm	722687
7	Nipples ferma guaina Nipples serre gaine Wire guide locking nipples Drahtseeleklemmnipples Nipples de bloqueo vaina	722598
8	Anello or Bague or Or ring Or ring Anillo or	722601
8	Anello or Anneau or Or ring Or ring Anillo or	722606
9	Lancia mt25 Lance mt25 Swan neck mt25 Brennerhals mt25 Encorvado mt25	722696
10	Tubetto ferma guaina Tuyau serre gaine Wire guide locking tube Drahtseeleklemmrohr Tubito de bloqueo vaina	722600
11	Diffusore gas mt25 Diffuseur gaz mt25 Gas diffuser mt25 Gasdiffusor mt25 Diffusor gas mt25	722688
12	Isolante corpo torcia Isolant corps de torche Torch connection insulation Brenneranschlussblock isolierteil Aislador cuerpo de antorcha	722693
13	Molla per ugello mt25 Ressort pour buse mt25 Nozzle spring mt25 Düsenfeder mt25 Muelle por inyector mt25	722690

REF.	ELENCO PEZZI RICAMBIO TORCIA LISTE PIECES DETACHEES TORCHE SPARE PARTS LIST TORCH ERSATZTEILLISTE SCLAUCHPAKET PIEZAS DE REPUESTO ANTORCHA	CODICE CODE KODE

ELENCO PEZZI DI RICAMBIO
LISTE PIECES DETACHEES
SPARE PARTS LIST
ERSATZTEILLISTE
PIEZAS DE REPUESTO

SUPERMIG 450i

Esploso macchina, Dessin appareil, Machine drawing, Explosions Zeichnung des Geräts, Diseño seccionado maquina.

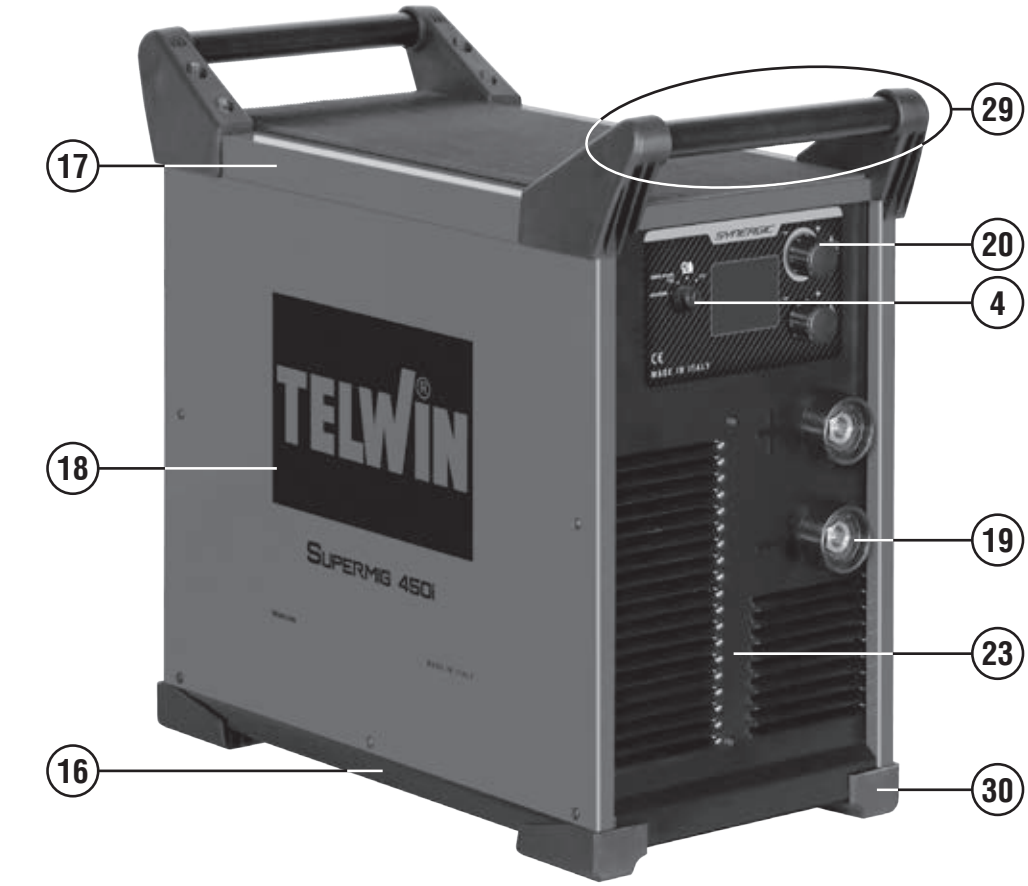

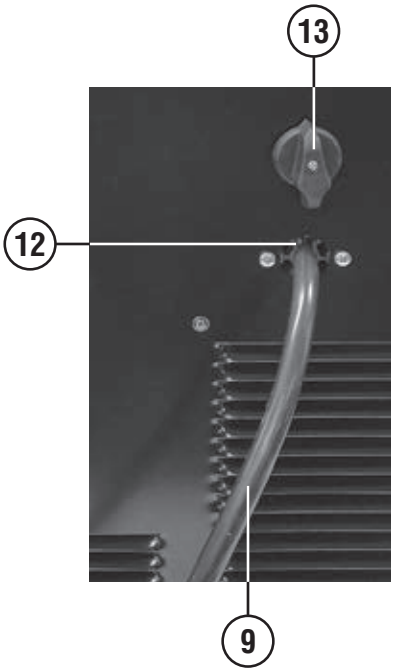

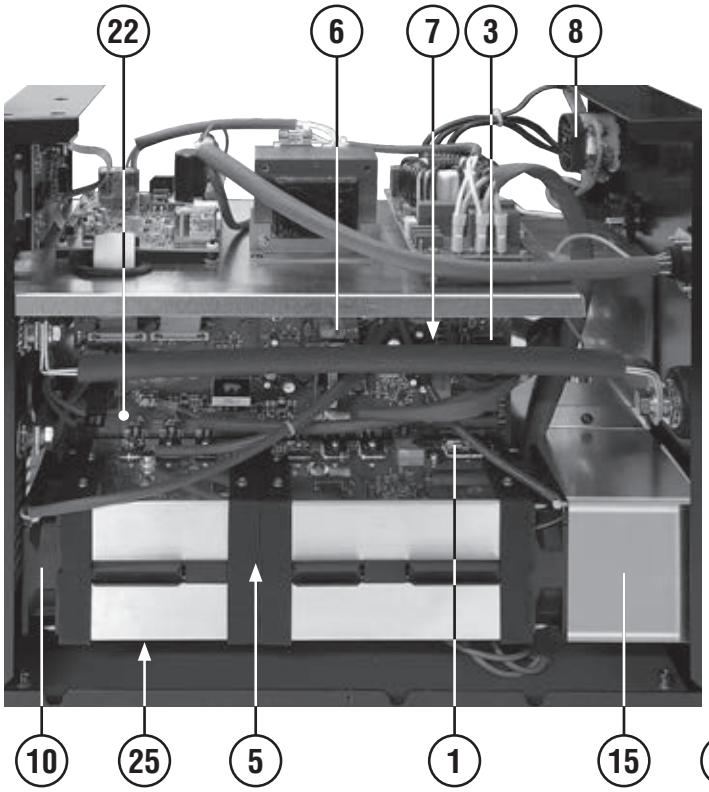

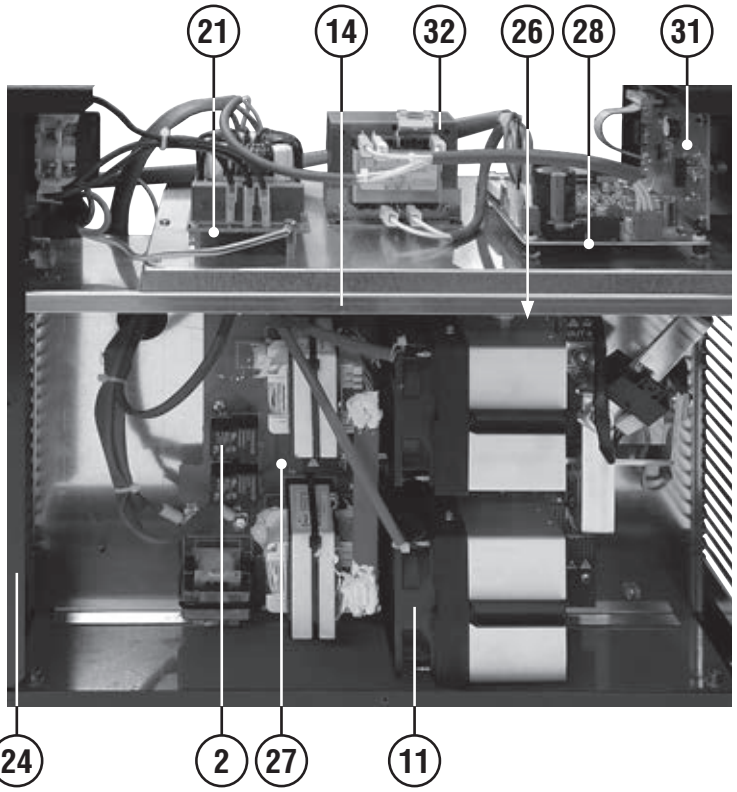

REF.	ELENCO PEZZI DI RICAMBIO PIECES DETACHEES SPARE PARTS LIST ERSATZTEILLISTE PIEZAS DE REPUESTO	CODICE CODE KODE
1	Ponte monofase Pont monophase Single phase bridge Einfasige brücke Puente monofasico	111017
2	Rele Relais Relais Relais Conectador	111211
3	Rele' Relais Relais Relais Conectador	111252
4	Manopola Poignee Knob Griff Manija	121751
5	Condensatore Condensateur Capacitor Kondensator Condensador	113122
6	Rele' Relais Relais Relais Relais	116320
7	Res. Met. 10r 2w 5% fuse Res. Met. 10r 2w 5% fuse Res. Met. 10r 2w 5% fuse Res. Met. 10r 2w 5% fuse Res. Met. 10r 2w 5% fuse	116962
8	Commutatore Commutateur Switch Schalter Conmutador	122017
9	Cavo alim. 4g4 2 m Cable alim. 4g4 2 m Mains cable 4g4 2 m Netzkabel 4g4 2 m Cable alim. 4g4 2 m	132206
10	Ventilatore 12vdc 92x 92x25 Ventilateur 12vdc 92x 92x25 Fan 12vdc 92x 92x25 Ventilator 12vdc 92x 92x25 Ventilador 12vdc 92x 92x25	152361
11	Ventilatore Ventilateur Fan Ventilator Ventilador	152904
12	Pressacavo Presse cable Cable bushing Kabelhalter Prensa cable	312068
13	Assieme manopola per commutatore Set poigne pour commutateur Switch knob set Umschaltergriff set Set manjia para conmutador	323101
14	Diaframma Diaphragme Diaphragm Diaphragma Diafragma	485481
15	Convogliatore Conveyeur Conveyor Lüfterabdeckung Conveyor	485893
16	Fondo Chassis Bottom Bodenteil Fondo	645965
17	Mantello Capot Cover Deckel Panel de cobertura	651276
18	Fianco Partie laterale Side panel Seitenblech Flanco	656321
19	Presa atlas 50mmq Prise atlas 50mmq Socket atlas 50mmq Steckdose atlas 50mmq Enchufe atlas 50mmq	804197
20	Kit manopola encoder d.29 Kit poignee encoder d.29 Encoder knob kit d.29 Encodergriff kit d.29 Kit manija encoder d.29	982070
21	Kit scheda filtro ingresso Kit platine filtre input Input filter card kit Input filterkarte kit Kit tarjeta filtro input	980947
22	Kit scheda primario Kit platine primaire Kit primary control pcb Kit primärsteurungskarte Kit tarjeta primario	982460
23	Kit frontale Kit partie frontal Front panel kit Gerätefront kit Kit frontal	982531
24	Kit retro Kit partie arriere Back panel kit Rückseite kit Kit trasera	982534
25	Kit igbt Kit igbt Kit igbt Kit igbt Kit igbt	982463
26	Kit diodi Kit diodes Diodes kit Dioden kit Kit diodos	982464
27	Kit scheda secondario completa Kit platine secondaire complete Complete secondary pcb kit Komplette sekundärtrafokarte kit Kit tarjeta secundario completa	982536
28	Kit scheda controllo Kit platine de controle Control pcb kit Kontrollekarte kit Kit tarjeta de controlo	982538
29	Kit manico Kit poignee Handle kit Handgriff kit Kit manija	982467
30	Kit piedini Kit embouts Feet kit Fuss kit Kit pies	982468
31	Kit scheda display Kit platine affichage Display board kit Tafel karte kit Kit tarjeta pantalla	982540
32	Kit autotrasfo Kit autotrasfo Autotrasfo kit Autotrasfo kit Kit autotrasfo	981869

Schema elettrico, Schéma électrique, Diagram, Schaltplan, Esquema de conexiones.

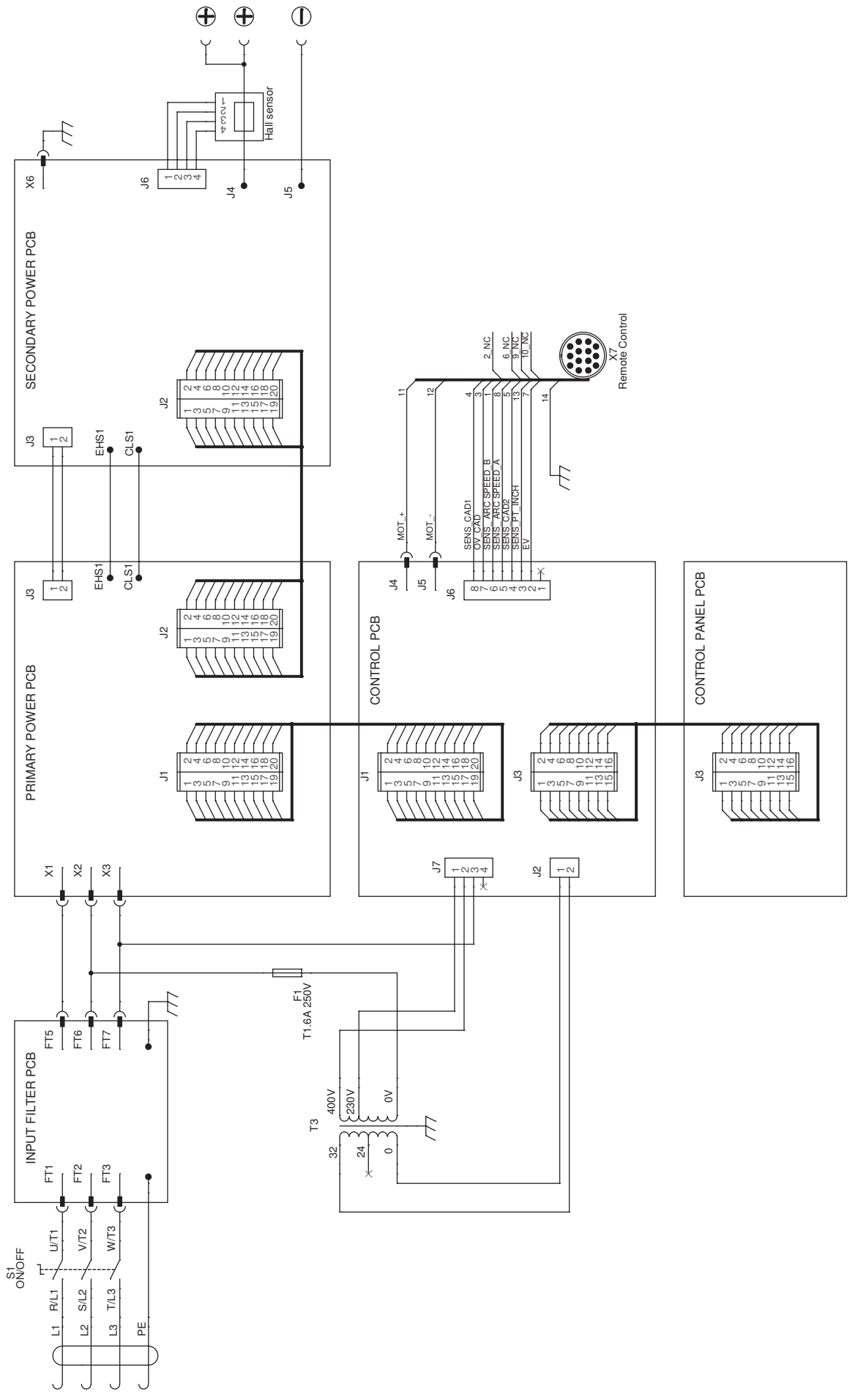

Esploso torcia, Dessin torche, Torch drawing, Schlauchpaket - Explosionszeichnung, Diseño seccionado antorcha.

742186 3m
742187 4m
742188 5m

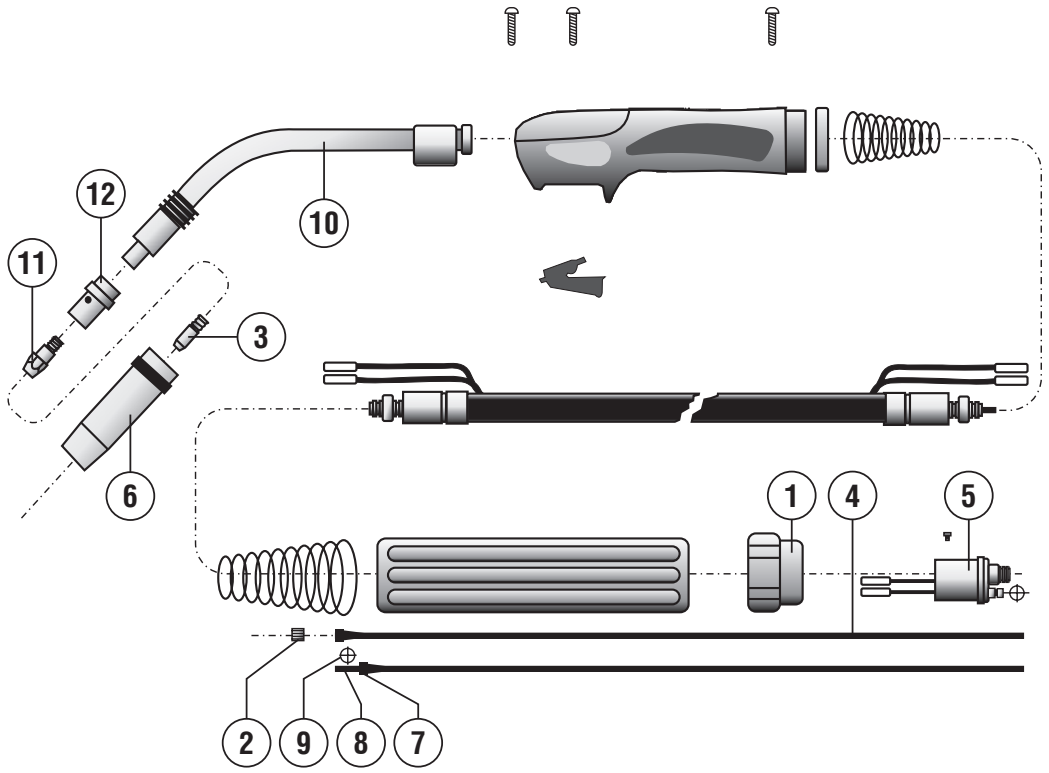

REF.	ELENCO PEZZI RICAMBIO TORCIA LISTE PIECES DETACHEES TORCHE SPARE PARTS LIST TORCH ERSATZTEILLISTE SCLAUCHPAKET PIEZAS DE REPUESTO ANTORCHA	CODICE CODE KODE
1	Ghiera fissaggio Embout fixage Ring nut Nutmutter Virola por fiyacion	722007
2	Dado fissaggio guaina Ecrou fixage gaine Liner nut Befestigungsmutter Dado por fiyacion vaina	722013
3	Tubetto di contatto d. 1,6 Mm al/flux m6 Tube contact d. 1,6 Mm al/flux m6 Contact tip d. 1,6 Mm al/flux m6 Kontaktdüse d. 1,6 Mm al/flux m6 Tubito de contacto d. 1,6 Mm al/flux m6	722818
3	Tubetto di contatto d. 1,6 Mm fe Tube contact d. 1,6 Mm fe Contact tip d. 1,6 Mm fe Kontaktroehrchen d. 1,6 Mm fe Tubito de contacto d. 1,6 Mm fe	722797
3	Tubetto di contatto d. 1,2 Mm fe Tube contact d. 1,2 Mm fe Contact tip d. 1,2 Mm fe Kontaktdüse d. 1,2 Mm fe Tubito de contacto d. 1,2 Mm fe	722682
3	Tubetto di contatto d. 1 Mm fe m6 l=28mm Tube contact d. 1 Mm fe m6 l=28mm Contact tip d. 1 Mm fe m6 l=28mm Kontaktdüse d. 1 Mm fe m6 l=28mm Tubito de contacto d. 1 Mm fe m6 l=28mm	722681
3	Tubetto di contatto d. 0,8 Mm m6 Tube contact d. 0,8 Mm m6 Contact tip d. 0,8 Mm m6 Kontaktdüse d. 0,8 Mm m6 Tubito de contacto d. 0,8 Mm m6	722680
3	Tubetto di contatto d. 1,2 Mm al/flux m6 Tube contact d. 1,2 Mm al/flux m6 Contact tip d. 1,2 Mm al/flux m6 Kontaktdüse d. 1,2 Mm al/flux m6 Tubito de contacto d. 1,2 Mm al/flux m6	722553
3	Tubetto di contatto d. 1 Mm al/flux m6 Tube contact d. 1 Mm al/flux m6 Contact tip d. 1 Mm al/flux m6 Kontaktdüse d. 1 Mm al/flux m6 Tubito de contacto d. 1 Mm al/flux m6	722552
3	Tubetto di contatto d. 0,6 Mm fe Tube contact d. 0,6 Mm fe Contact tip d. 0,6 Mm fe Kontaktdüse d. 0,6 Mm fe Tubito de contacto d. 0,6 Mm fe	722415
4	Guaina guidafilo ø1.0-1.2 3m rossa Gaine pour fil ø1.0-1.2 3m rouge Wire guide hose ø1.0-1.2 3m red Drahtführungsseele ø1.0-1.2 3m rot Vaina guia hilo ø1.0-1.2 3m roja	722689
4	Guaina guidafilo ø0.6-0.8 3m blu Gaine pour fil ø0.6-0.8 3m bleu Wire guide hose ø0.6-0.8 3m blue Drahtführungsseele ø0.6-0.8 3m blue Vaina guia hilo ø0.6-0.8 3m blue	722437

REF.	ELENCO PEZZI RICAMBIO TORCIA LISTE PIECES DETACHEES TORCHE SPARE PARTS LIST TORCH ERSATZTEILLISTE SCLAUCHPAKET PIEZAS DE REPUESTO ANTORCHA	CODICE CODE KODE
4	Guaina guidafilo ø1.2-1.6 4m al Gaine pour fil ø1.2-1.6 4m al Wire guide hose ø1.2-1.6 4m al Drahtführungsseele ø1.2-1.6 4m al Vaina guia hilo ø1.2-1.6 4m al	742811
4	Guaina guidaf. Ø1.0-1.2 4m al Gaine pour fil ø1.0-1.2 4m al Wire guide hose ø1.0-1.2 4m al Drahtführungsseele ø1.0-1.2 4m al Vaina guia hilo ø1.0-1.2 4m al	742812
5	Corpo torcia Corp de torche Torch assy Brennerskörper Enganche antorcha	722441
6	Ugello conico mt36 Buse conique mt36 Conical nozzle mt36 Konische düse mt36 Inyector conico mt36	722792
6	Ugello testa fine mt36 Buse a tete fine mt36 Thin headed nozzle mt36 Verengte düse mt36 Inyector cabeza fina mt36	722793
6	Ugello puntatura Buse pour pointage Spot welding nozzle Punktschweissdüse Inyector por puntos	722794
7	Nipples ferma guaina Nipples serre gaine Wire guide locking nipples Drahtseeleklemmnipples Nipples de bloqueo vaina	722598
7	Nipples ferma guaina Nipples serre gaine Wire guide locking nipples Drahtseeleklemmnipples Nipples de bloqueo vaina	722599
8	Tubetto ferma guaina Tuyau serre gaine Wire guide locking tube Drahtseeleklemmrohr Tubito de bloqueo vaina	722600
9	Anello or Bague or Or ring Or ring Anillo or	722601
9	Anello or Anneau or Or ring Or ring Anillo or	722606
10	Lancia mt36 Lance mt36 Swan neck mt36 Brennerhals mt36 Encorvado mt36	722788

REF.	ELENCO PEZZI RICAMBIO TORCIA LISTE PIECES DETACHEES TORCHE SPARE PARTS LIST TORCH ERSATZTEILLISTE SCLAUCHPAKET PIEZAS DE REPUESTO ANTORCHA	CODICE CODE KODE
11	Supporto tubetto contatto mt36 Support tube contact mt36 Contact tip holder mt36 Kontaktröhrchen träger mt36 Sosten tubito de contacto mt36	722789
12	Diffusore gas isolante mt 36 Diffuseur gaz isolant mt 36 Insulating gas diffuser mt 36 Isolierte gas diffusor mt 36 Difusor gas aislante mt 36	722791

ELENCO PEZZI DI RICAMBIO
LISTE PIECES DETACHEES
SPARE PARTS LIST
ERSATZTEILLISTE
PIEZAS DE REPUESTO

TS500 WIRE FEEDER

TELWIN®

Esploso macchina, Dessin appareil, Machine drawing, Explosions Zeichnung des Geräts, Diseño seccionado maquina.

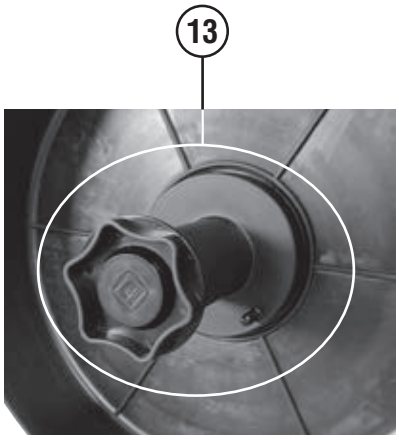

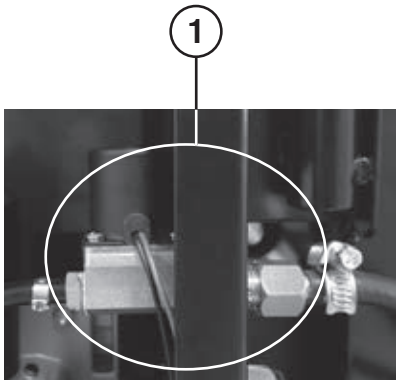

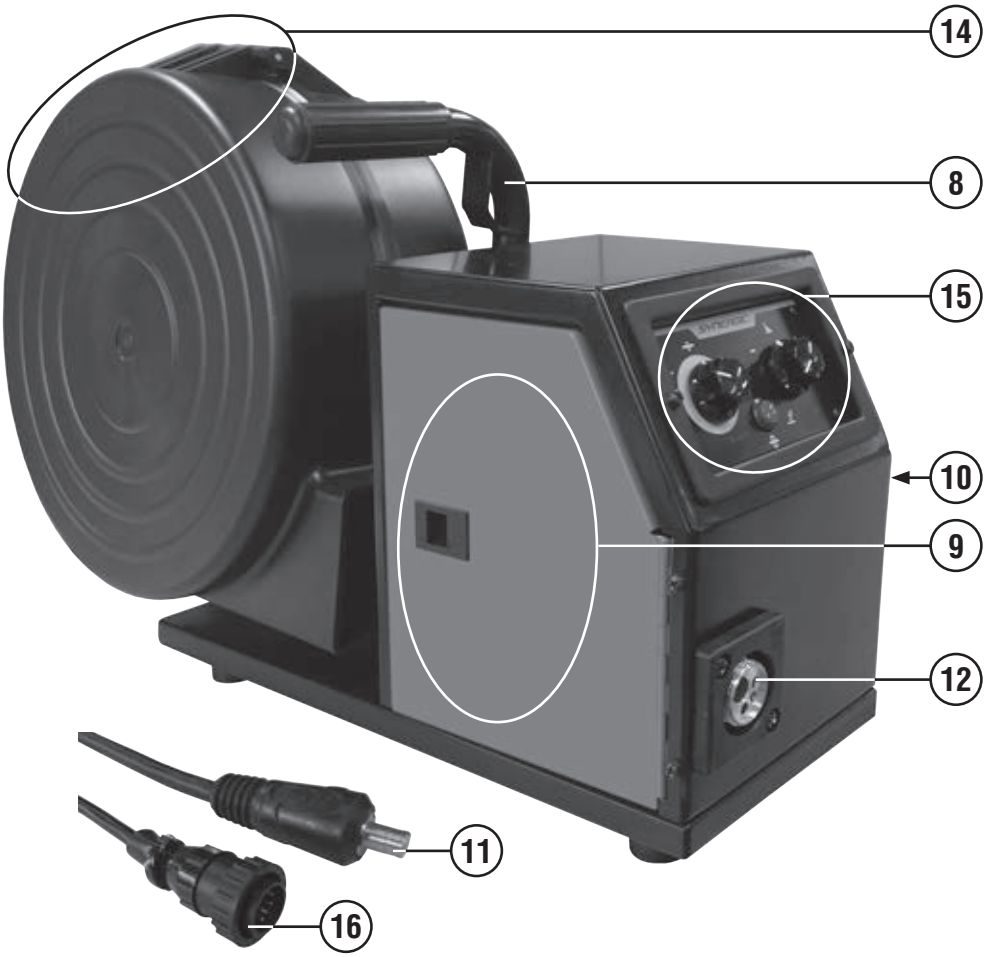

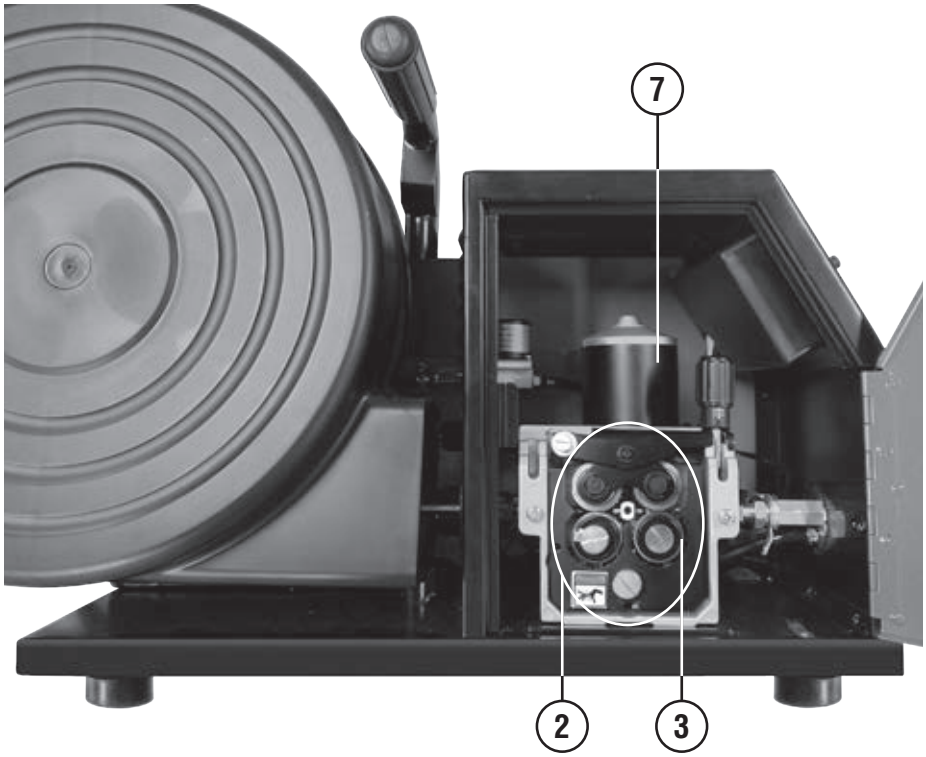

REF.	ELENCO PEZZI DI RICAMBIO PIECES DETACHEES SPARE PARTS LIST ERSATZTEILLISTE PIEZAS DE REPUESTO	CODICE CODE KODE
1	Elettrovalvola 2vie 024v dc+ag ts500 Electrovanne 2voies 024v dc+ag ts500 Electro-valve 2-ways 024v dc+ag ts500 Elektroventil 2wege 024v dc+ag ts500 Electrovalvola 2vías 024v dc+ag ts500	122002
2	Gruppo traino 4 rulli Set devidoir 4 roleaux 4 Rolls wire feed assy 4 Räder drahtvorschubset Set arrastre hilo 4 rollos	723342
3	Rullino traino 4r 0,6fe-0,8fe Galet 4r 0,6fe-0,8fe Feed roll 4r 0,6fe-0,8fe Vorschubrolle 4r 0,6fe-0,8fe Roldana 4r 0,6fe-0,8fe	742836
4	Rullino traino 4r 1,0fe-1,2fe Galet 4r 1,0fe-1,2fe Feed roll 4r 1,0fe-1,2fe Vorschubrolle 4r 1,0fe-1,2fe Roldana4r 1,0fe-1,2fe	742837
5	Rullino traino 4r 0,8al-1,0al Galet 4r 0,8al-1,0al Feed roll 4r 0,8al-1,0al Vorschubrolle 4r 0,8al-1,0al Roldana 4r 0,8al-1,0al	742838
6	Rullino traino 4r 1,0al-1,2al Galet 4r 1,0al-1,2al Feed roll 4r 1,0al-1,2al Vorschubrolle 4r 1,0al-1,2al Roldana 4r 1,0al-1,2al	742839
7	Motoriduttore 24v dc Motoriducteur 24v dc Motoreducer 24v dc Motoriduktor 24v dc Motoriductor 24v dc	153055
8	Manico traino + supporto aspo Poignee devidoir + support de bobine Feeder handle + reel holder Vorschubhandgriff+ wicklerhalter Manija alimen. De hilo + soporte aspa	645981
9	Sportello + chiusura a slitta Guichet + glissière Door + slide closure Tür + schiebeverschluss Puerta + cierre deslizante	651281
10	Fianco Partie laterale Side panel Seitenblech Flanco	651282
11	Spina atlas 50mmq Fiche atlas 50mmq Atlas plug 50mmq Atlas stecker 50mmq Enchufe atlas 50mmq	712040
12	Attacco torcia Attelage torche Torch connection Schlauchpaketanschluss Connexion antorcha	723865
13	Kit aspo 15kg Kit support bobine 15kg Reel kit 15kg Wickler kit 15kg Kit aspa 15kg	982541
14	Kit copribobina Kit couvre bobine Coil cover kit Spulendeckel kit Kit tapa bobina	982542
15	Kit pannello + scheda + manopola Kit panneau + module + poignee Panel + card + knob kit Tafel + karte + griff kit Kit panel + tarjeta + manija	982543
16	Kit connettore 14 contatti Kit connecteur 14 contacts 14 Contacts connector kit Kit 14 kontakte verbinder Kit conectador 14 contactos	990028

Schema elettrico, Schéma électrique, Diagram, Schaltplan, Esquema de conexiones.

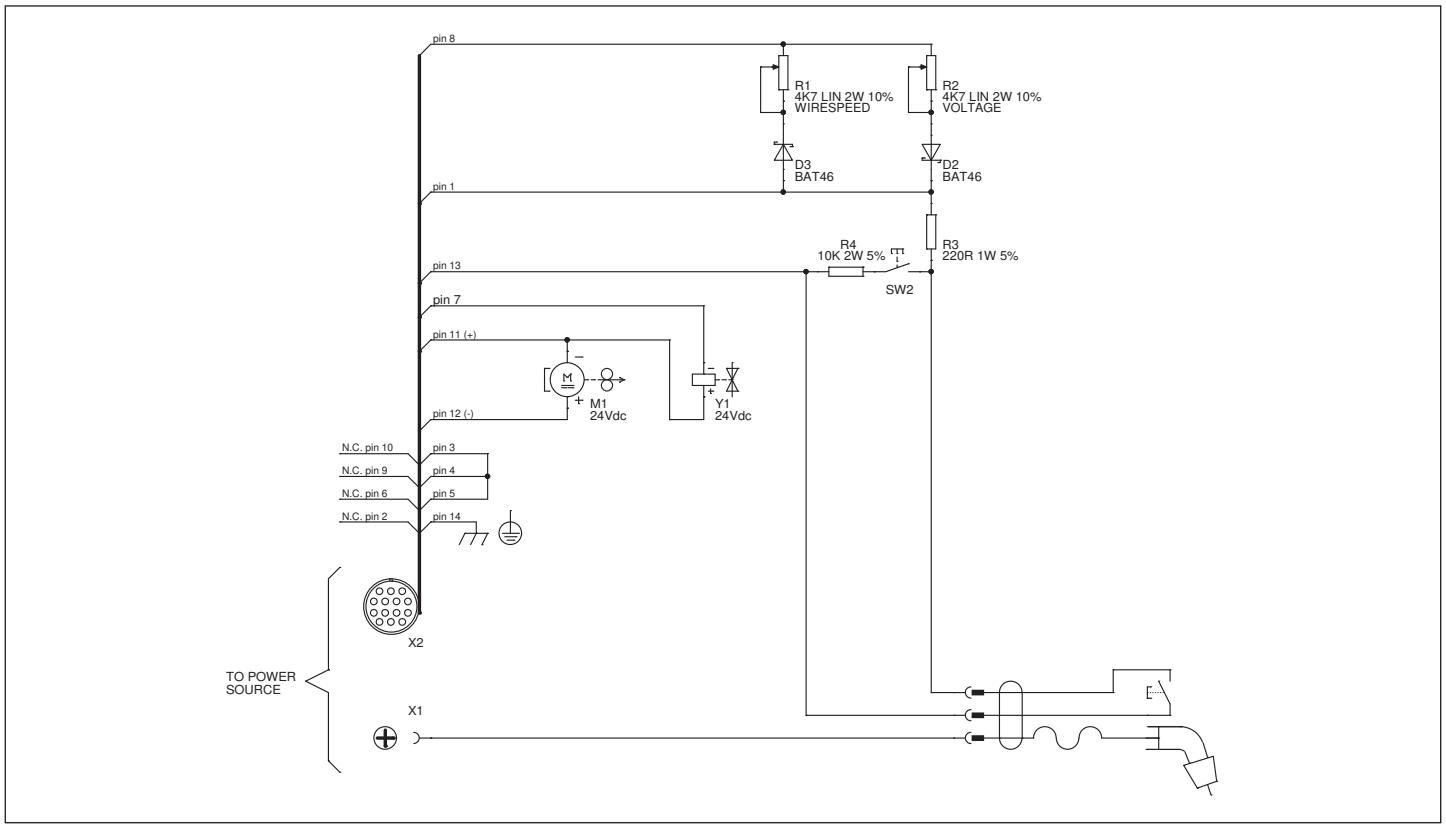

ELENCO PEZZI DI RICAMBIO
LISTE PIECES DETACHEES
SPARE PARTS LIST
ERSATZTEILLISTE
PIEZAS DE REPUESTO

TECHNOMIG 180 DUAL SYNERGIC

TELWIN®

Esploso macchina, Dessin appareil, Machine drawing, Explosions Zeichnung des Geräts, Diseño seccionado maquina.



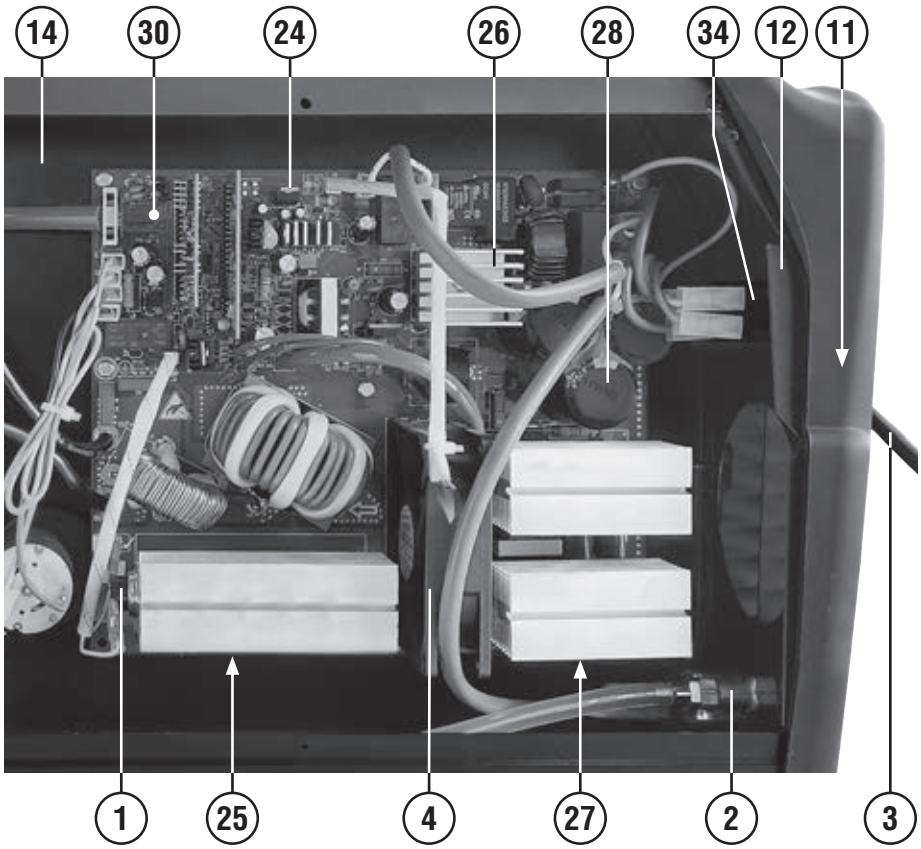

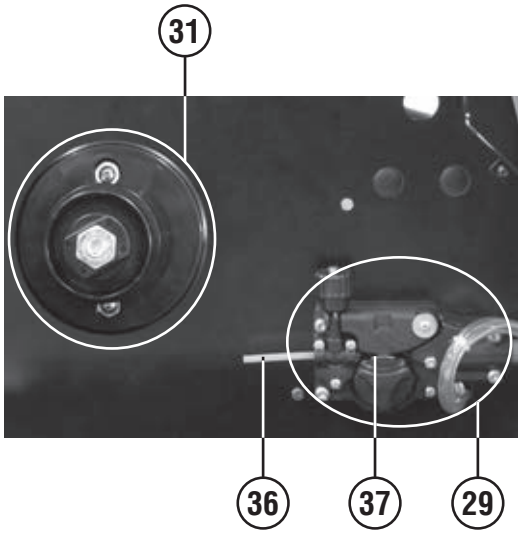

REF.	ELENCO PEZZI DI RICAMBIO PIECES DETACHEES SPARE PARTS LIST ERSATZTEILLISTE PIEZAS DE REPUESTO	CODICE CODE KODE
1	Termostato Thermostat Thermostat Thermostat Termostato	121748
2	Elettrovalvola Electrovanne Electrovalve Elektroventil Electrovalvula	121800
3	Cavo alim. 3g1.5 2 M spina schuko Cable alim. 3g1.5 2 M fiche schuko Mains cable 3g1.5 2 M schuko plug Netzkabel 3g1.5 2 M schuko stecker Cable alim. 3g1.5 2 M espina schuko	132155
4	Ventilatore Ventilateur Fan Ventilator Ventilador	152293
5	Kit fondo Kit chassis Bottom kit Bodenteil kit Kit fondo	981631
6	Retro Partie arriere Back panel Rueckseite Trasera	321093
7	Manico Poignee Handle Griff Manija	321095
8	Maniglia sportello Poignee guichet Door knob Tuer handgriff Manija portezuela	321102
9	Frontale Partie frontal Front panel Gerätefront Frontal	321356
10	Mascherina frontale Masque frontale Front protection Gerätefrontschutz Proteccion frontal	321463
11	Pressacavo Presse cable Cable bushing Kabelhalter Prensa cable	322112
12	Retro Partie arriere Back panel Rücksseite Trasera	642849
13	Frontale Partie frontal Front panel Gerätefront Frontal	645913
14	Diaframma Diaphragme Diaphragm Diaphragma Diafragma	645953
15	Mantello Capot Cover Deckel Panel de cobertura	651189
16	Fianco Partie laterale Side panel Seitenblech Flanco	656103
17	Sportello Guichet Door Tuer Portezuela	656105
18	Attacco torcia Attelage torche Torch connection Schlauchpaketanschluss Enganche antorcha	723051
19	Mt15 torcia mig 3m (red) Mt15 torche mig 3m (red) Mt15 mig torch 3m (red) Mt15 mig brenner 3m (red) Mt15 antorcha mig 3m (red)	742180
20	Pinza di massa + cavo 16mmq 2m ax25 Pince de masse + cable 16mmq 2m ax25 Work clamp + cable 16mmq 2m ax25 Massezange + kabel 16mmq 2m ax25 Pinca de masa + cable 16mmq 2m ax25	804120
21	Toledo 250 pinza di massa 250a Toledo 250 pince de masse 250a Toledo 250 work clamp 250a Toledo 250 masseklemme 250a Toledo 250 pinza de masa 250a	804181
22	Presa atlas 25mmq Prise atlas 25mmq Socket atlas 25mmq Steckdose atlas 25mmq Enchufe atlas 25mmq	804196
23	Spina atlas 25mmq Fiche atlas 25mmq Plug atlas 25mmq Stecker atlas 25mmq Enchufe atlas 25mmq	804199
24	Kit mosfet flyback Kit mosfet flyback Mosfet flyback kit Mosfet flyback kit Kit mosfet flyback	981585
25	Kit diodi Kit diodes Diode kit Diode kit Kit diodo	981591
26	Kit ponte monofase Kit pont monophase Single phase bridge kit Einfasige brücke kit Kit puente monofasico	981824
27	Kit igbt + diodo Kit igbt + diode Igbt + diode kit Igbt + diode kit Kit igbt + diodo	981825
28	Kit condensatore snap-in Kit condensateur snap-in Condenser kit snap-in Kondensator kit snap-in Kit condensator snap-in	981826
29	Kit motore Kit moteur Motor kit Motorkit Kit motor	981847
30	Kit scheda completa Kit platine complete Complete control pcb kit Komplette steurungskarte kit Kit tarjeta de controlo completa	981972
31	Kit aspo Kit support bobine Reel kit Wickler kit Kit aspa	981990
32	Kit potenziometro + manopole Kit potentiometre + poignees Kit potentiometer + knobs Kit potentiometer + knopfs Kit potenciometro + mandos	982259
33	Kit commutatore + manopola Kit commutateur + poignee Switch + knob kit Schalter + knopf kit Kit conmutador + manjia	982270
34	Kit interruttore Kit interrupteur Kit switch Kit schalter Kit interruptor	982356
35	Kit scheda pannello Kit platine frontal Front panel card kit Gerätefrontskarte kit Kit tarjeta frontal	982359
36	Kit guaina entrata motore Kit gaine entree moteur Gas hose kit Drahtfuehrungsseelekit Kit vaina guiadera alambre	990097
37	Rullino traino 1r 0,6fe-0,8/0,9fl "c" Galet 1r 0,6fe-0,8/0,9fl "c" Feed roll 1r 0,6fe-0,8/0,9fl "c" Vorschubrolle 1r 0,6fe-0,8/0,9fl "c" Roldana 1r 0,6fe-0,8/0,9fl "c"	722529

Schema elettrico, Schéma électrique, Diagram, Schaltplan, Esquema de conexiones.

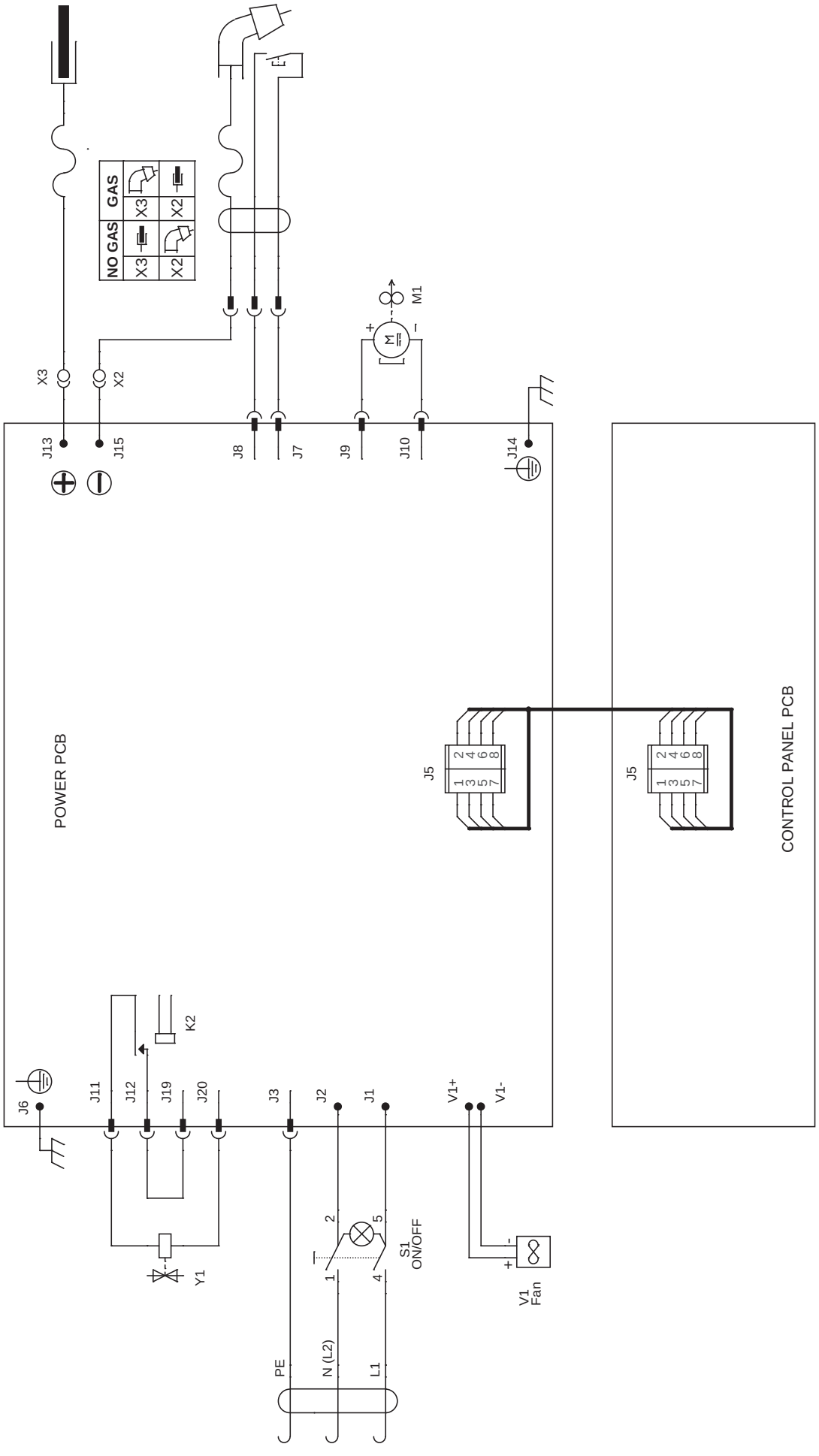

Esploso torcia, Dessin torche, Torch drawing, Schlauchpaket - Explosionszeichnung, Diseño seccionado antorcha.

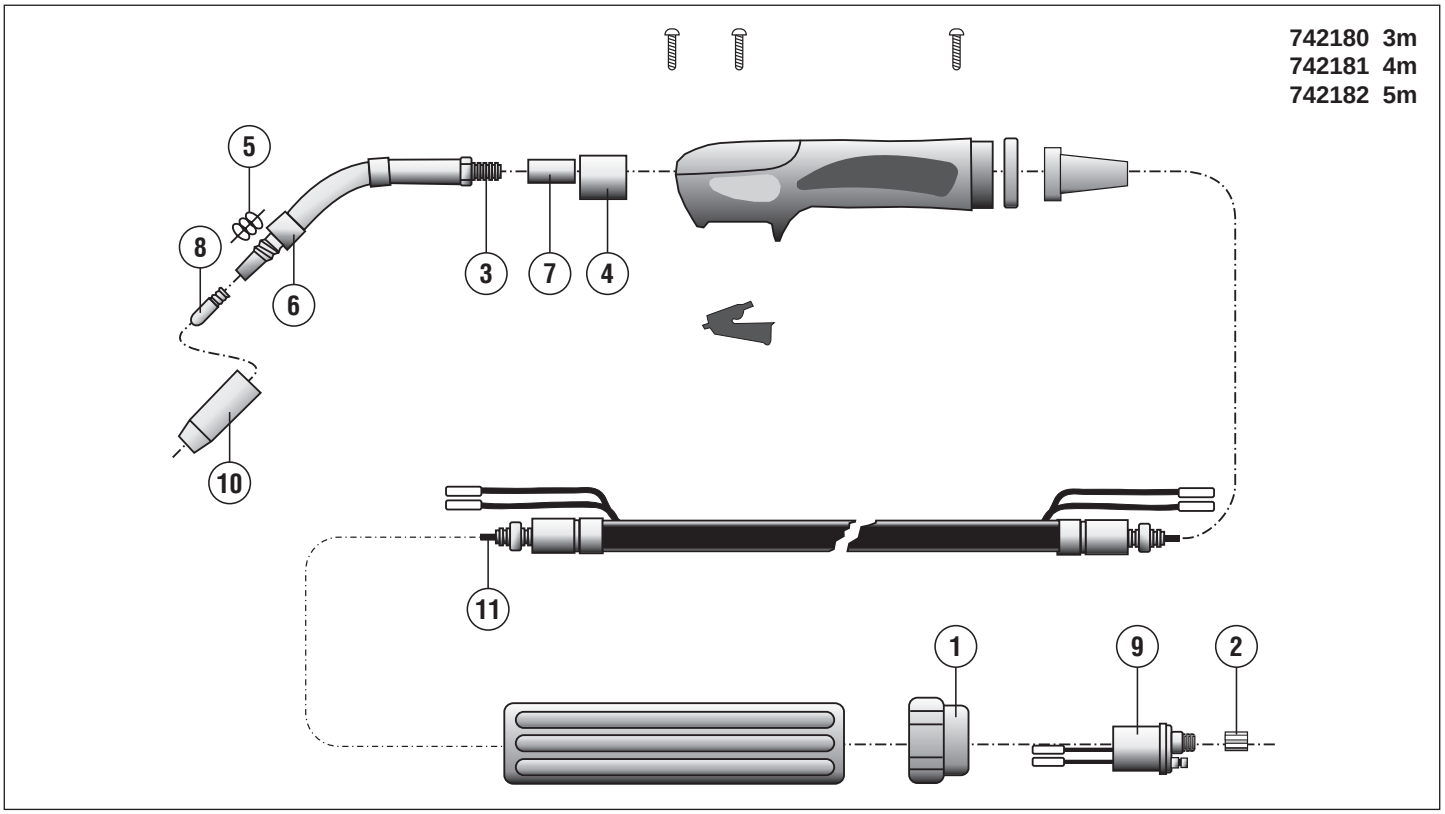

REF.	ELENCO PEZZI RICAMBIO TORCIA LISTE PIECES DETACHEES TORCHE SPARE PARTS LIST TORCH ERSATZTEILLISTE SCLAUCHPAKET PIEZAS DE REPUESTO ANTORCHA	CODICE CODE KODE
1	Ghiera fissaggio Embout fixage Ring nut Nutmutter Virola por fiyacion	722007
2	Dado fissaggio guaina Ecrou fixage gaine Liner nut Befestigungsmutter Dado por fiyacion vaina	722013
3	Lancia mt15 Lance mt15 Swan neck mt15 Brennerhals mt15 Encorvado mt15	722305
4	Isolante corpo torcia Isolant corps de torche Torch connection insulation Brenneranschlussblock isolierteil Aislador cuerpo de antorcha	722693
5	Molla per ugello tw160–180 mt15,spoolgun Ressort p. Buse tw160–180,mt15,spoolgun Nozzle spring tw 160–180, mt15, spoolgun Düsenfeder tw 160–180, mt15, spoolgun Muelle inyector tw160–180,mt15,spoolgun	722319
6	Isolante diffusore Isolant pour diffuseur Diffuser insulation Isolierbuchse Aislador diffusor	722326
7	Corpo torcia Corps de torche Torch connection Brenneranschlussblock Cuerpo de antorcha	722325
8	Tubetto di contatto d. 0,6 Mm fe Tube contact d. 0,6 Mm fe Contact tip d. 0,6 Mm fe Kontaktdüse d. 0,6 Mm fe Tubito de contacto d. 0,6 Mm fe	722415
8	Tubetto di contatto d. 0,8 Mm fe m6 Tube contact d. 0,8 Mm fe m6 Contact tip d. 0,8 Mm fe m6 Kontaktdüse d. 0,8 Mm fe m6 Tubito de contacto d. 0,8 Mm fe m6	722416
9	Corpo torcia Corp de torche Torch assy Brennerskörper Enganche antorcha	722441
10	Ugello cilindrico tw160–180,mt15,sp.Gun Bec conique tw160–180,mt15,sp.Gun Cylindrical nozzle tw160–180,mt15,sp.Gun Zylindrische düse tw160–180,mt15,sp.Gun Inyect. Cilindrico tw160–180,mt15,sp.Gun	722149
10	Ugello conico tw 160–180, mt15,spoolgun Buse conique tw 160–180, mt15,spoolgun Conical nozzle tw 160–180, mt15,spoolgun Gasdüse konisch tw 160–180,mt15,spoolgun Inyector conico tw 160–180,mt15,spoolgun	722423

REF.	ELENCO PEZZI RICAMBIO TORCIA LISTE PIECES DETACHEES TORCHE SPARE PARTS LIST TORCH ERSATZTEILLISTE SCLAUCHPAKET PIEZAS DE REPUESTO ANTORCHA	CODICE CODE KODE
11	Guaina guidafilo ø0.6-0.8 3m blu Gaine pour fil ø0.6-0.8 3m bleu Wire guide hose ø0.6-0.8 3m blue Drahtführungsseele ø0.6-0.8 3m blue Vaina guia hilo ø0.6-0.8 3m blue	722437
11	Guaina guidafilo ø1.0-1.2 3m rossa Gaine pour fil ø1.0-1.2 3m rouge Wire guide hose ø1.0-1.2 3m red Drahtführungsseele ø1.0-1.2 3m rot Vaina guia hilo ø1.0-1.2 3m roja	722689

REF.	ELENCO PEZZI RICAMBIO TORCIA LISTE PIECES DETACHEES TORCHE SPARE PARTS LIST TORCH ERSATZTEILLISTE SCLAUCHPAKET PIEZAS DE REPUESTO ANTORCHA	CODICE CODE KODE

ELENCO PEZZI DI RICAMBIO
LISTE PIECES DETACHEES
SPARE PARTS LIST
ERSATZTEILLISTE
PIEZAS DE REPUESTO

TECHNOMIG 210 DUAL SYNERGIC

Esploso macchina, Dessin appareil, Machine drawing, Explosions Zeichnung des Geräts, Diseño seccionado maquina.



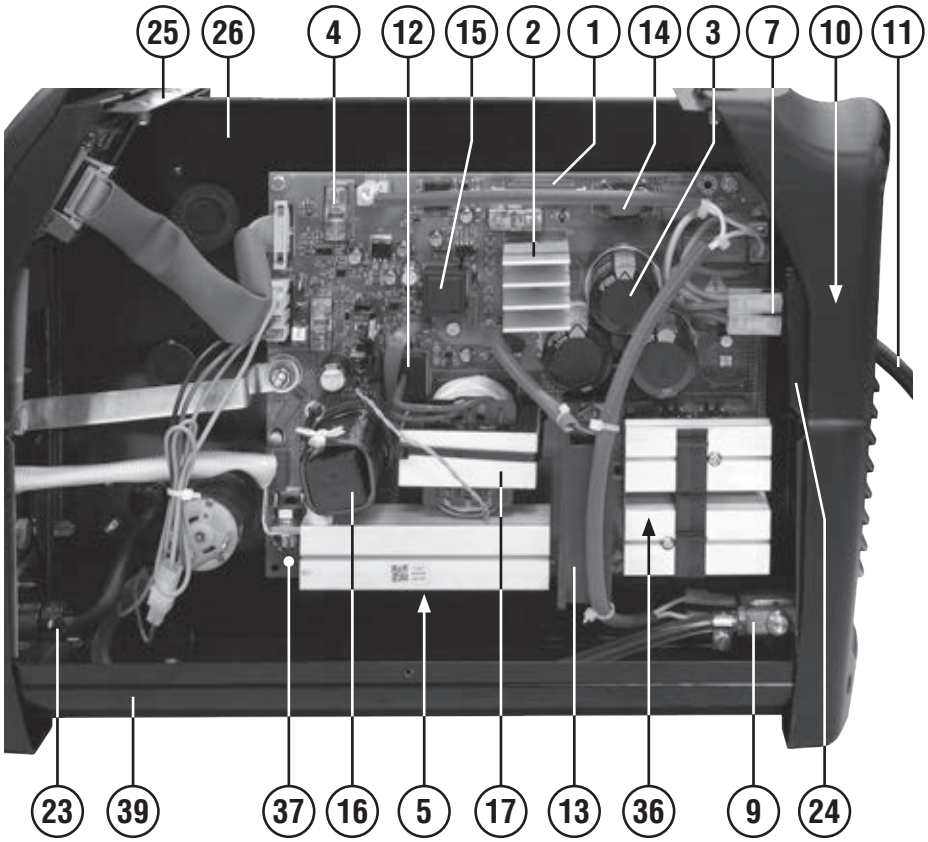

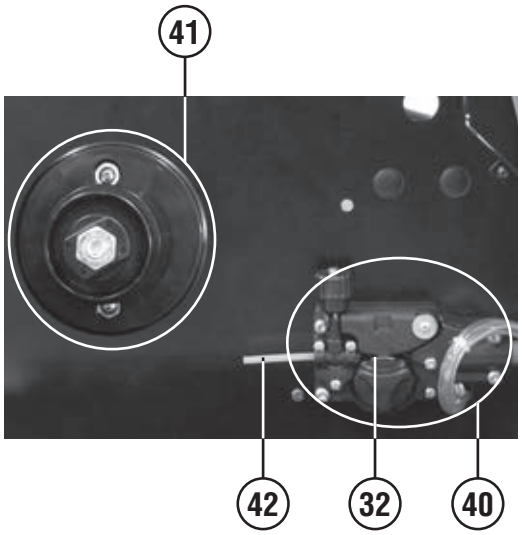

REF.	ELENCO PEZZI DI RICAMBIO PIECES DETACHEES SPARE PARTS LIST ERSATZTEILLISTE PIEZAS DE REPUESTO	CODICE CODE KODE
1	Res. Filo 47r 8w 5% Res. Fil 47r 8w 5% Res. Wire 47r 8w 5% Res. Draht 47r 8w 5% Res. Hilo 47r 8w 5%	112048
2	Raddrizzatore monofase Redresseur monophase Single-phase rectifier Einphasiger gleichrichter Rectificador monofasico	112357
3	Condensatore Condensateur Capacitor Kondensator Condensador	112694
4	Rele' Relais Relais Relais Relais	116320
5	Diodo Diode Diode Diode Diodo	116839
6	Cavo 16 mmq 1,8 m - spina atlas 25 Cable 16 mmq 1,8 m - fiche atlas 25 Cable 16 mmq 1,8 m - plug atlas 25 Kabel 16 mmq 1,8 m - stecker atlas 25 Cable 16 mmq 1,8 m - enchufe atlas 25	120602
7	Interruttore Interrupteur Switch Schalter Interruptor	121248
8	Manopola per potenziometro Poignee pour potentiometre Potentiometer knob Potentiometergriff Manija por potenciometro	121547
9	Elettrovalvola Electrovanne Electrovalve Elektroventil Electrovalvula	121800
10	Copri interruttore Couvre interrupteur Switch cover Schalterdeckel Cubre interruptor	122353
11	Cavo alimentazione Cable de reseau Mains cable Netzkabel Cable de alimentation	132157
12	Trasformatore di corrente Transformateur de courant Current transformer Stromwandler Transformador de corriente	152230
13	Ventilatore Ventilateur Fan Ventilator Ventilador	152269
14	Induttanza filtro Inductance filter Filter inductance Filter drossel Induccion filtro	164741
15	Trasformatore x flyback Transformateur x flyback Transformer x flyback Transformator x flyback Transformador x flyback	169700
16	Induttanza uscita Inductance output Output inductance Output drossel Induccion output	169808
17	Trasformatore potenza Transformateur de puissance Power trafo Leistungstransformer Transformador de potencia	169822
18	Retro Partie arriere Back panel Ruecksеite Trasera	321093
19	Manico Poignee Handle Griff Manija	321095
20	Maniglia sportello Poignee guichet Door knob Tuer handgriff Manija portezuela	321102
21	Mascherina frontale Masque frontale Front protection Geraetefrontschutz Proteccion frontal	321122
22	Frontale Partie frontal Front panel Gerätefront Frontal	321356
23	Pressacavo Presse cable Cable bushing Kabelhalter Prensa cable	322112
24	Retro Partie arriere Back panel Rückseite Trasera	642762
25	Frontale Partie frontal Front panel Gerätefront Frontal	645913
26	Diaframma Diaphragme Diaphragm Diaphragma Diafragma	645915
27	Mantello Capot Cover Deckel Panel de cobertura	651189
28	Fianco Partie laterale Side panel Seitenblech Flanco	656121
29	Sportello Guichet Door Tuer Portezuela	656122
30	Toledo 250 pinza di massa 250a Toledo 250 pince de masse 250a Toledo 250 work clamp 250a Toledo 250 masseklemme 250a Toledo 250 pinza de masa 250a	712030
31	Spina atlas 25mmq Fiche atlas 25mmq Atlas plug 25mmq Atlas stecker 25mmq Enchufe atlas 25mmq	712039
32	Rullino traino 1r 0,6fe-0,8/0,9fe “c” Galet1r 0,6fe-0,8/0,9fe “c” Feed roll 1r 0,6fe-0,8/0,9fe “c” Vorschubrolle 1r 0,6fe-0,8/0,9fe “c” Roldana 1r 0,6fe-0,8/0,9fe “c”	722019
33	Attacco torcia Attelage torche Torch connection Schlauchpaketanschluss Enganche antorcha	723051
34	Mt15 torcia mig 3m (red) Mt15 torche mig 3m (red) Mt15 mig torch 3m (red) Mt15 mig brenner 3m (red) Mt15 antorcha mig 3m (red)	742180
35	Presa atlas 25mmq Prise atlas 25mmq Socket atlas 25mmq Steckdose atlas 25mmq Enchufe atlas 25mmq	712035
36	Kit igbt + diodo Kit igbt + diode Igbt + diode kit Igbt + diode kit Kit igbt + diodo	980990
37	Kit scheda completa Kit fiche complete Complete pcb kit Komplette karte kit Kit tarjeta completa	981494
38	Kit scheda pannello Kit platine frontal Kit front panel card Kit gerätefrontskarte Kit tarjeta frontal	982220
39	Kit fondo Kit chassis Bottom kit Bodenteil kit Kit fondo	981631
40	Kit motore Kit moteur Motor kit Motorkit Kit motor	981831
41	Kit aspo Kit support bobine Reel kit Wickler kit Kit aspa	981990
42	Kit guaina entrata motore Kit gaine entree moteur Gas hose kit Drahtfuehrungsseelekit Kit vaina guiadera alambre	990097

Schema elettrico, Schéma électrique, Diagram, Schaltplan, Esquema de conexiones.

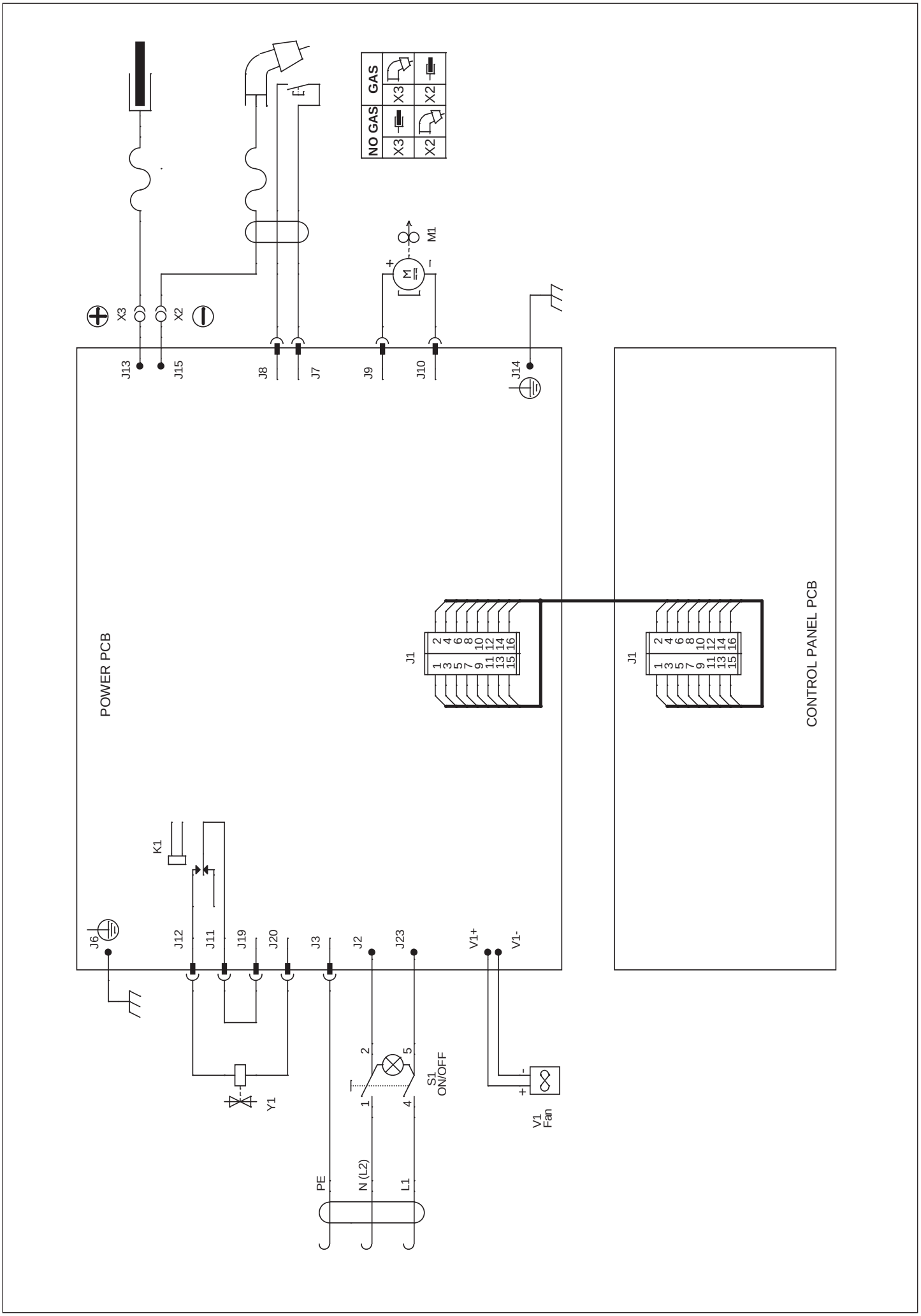

Esploso torcia, Dessin torche, Torch drawing, Schlauchpaket - Explosionszeichnung, Diseño seccionado antorcha.

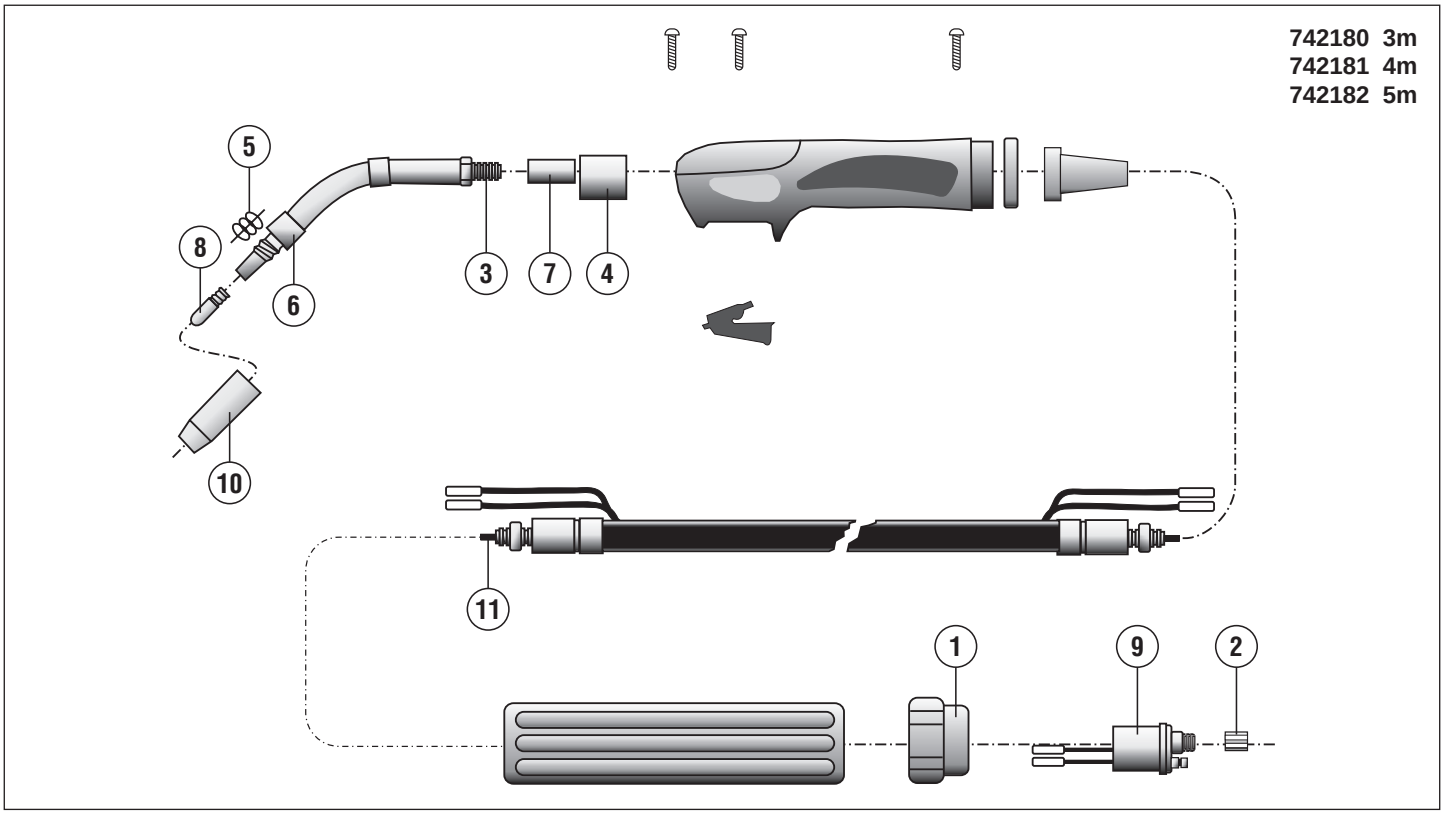

REF.	ELENCO PEZZI RICAMBIO TORCIA LISTE PIECES DETACHEES TORCHE SPARE PARTS LIST TORCH ERSATZTEILLISTE SCLAUCHPAKET PIEZAS DE REPUESTO ANTORCHA	CODICE CODE KODE
1	Ghiera fissaggio Embout fixage Ring nut Nutmutter Virola por fiyacion	722007
2	Dado fissaggio guaina Ecrou fixage gaine Liner nut Befestigungsmutter Dado por fiyacion vaina	722013
3	Lancia mt15 Lance mt15 Swan neck mt15 Brennerhals mt15 Encorvado mt15	722305
4	Isolante corpo torcia Isolant corps de torche Torch connection insulation Brenneranschlussblock isolierteil Aislador cuerpo de antorcha	722693
5	Molla per ugello tw160–180 mt15,spoolgun Ressort p. Buse tw160–180,mt15,spoolgun Nozzle spring tw 160–180, mt15, spoolgun Düsenfeder tw 160–180, mt15, spoolgun Muelle inyector tw160–180,mt15,spoolgun	722319
6	Isolante diffusore Isolant pour diffuseur Diffuser insulation Isolierbuchse Aislador diffusor	722326
7	Corpo torcia Corps de torche Torch connection Brenneranschlussblock Cuerpo de antorcha	722325
8	Tubetto di contatto d. 0,6 Mm fe Tube contact d. 0,6 Mm fe Contact tip d. 0,6 Mm fe Kontaktdüse d. 0,6 Mm fe Tubito de contacto d. 0,6 Mm fe	722415
8	Tubetto di contatto d. 0,8 Mm fe m6 Tube contact d. 0,8 Mm fe m6 Contact tip d. 0,8 Mm fe m6 Kontaktdüse d. 0,8 Mm fe m6 Tubito de contacto d. 0,8 Mm fe m6	722416
9	Corpo torcia Corp de torche Torch assy Brennerskörper Enganche antorcha	722441
10	Ugello cilindrico tw160–180,mt15,sp.Gun Bec conique tw160–180,mt15,sp.Gun Cylindrical nozzle tw160–180,mt15,sp.Gun Zylindrische düse tw160–180,mt15,sp.Gun Inyect. Cilindrico tw160–180,mt15,sp.Gun	722149
10	Ugello conico tw 160–180, mt15,spoolgun Buse conique tw 160–180, mt15,spoolgun Conical nozzle tw 160–180, mt15,spoolgun Gasdüse konisch tw 160–180,mt15,spoolgun Inyector conico tw 160–180,mt15,spoolgun	722423

REF.	ELENCO PEZZI RICAMBIO TORCIA LISTE PIECES DETACHEES TORCHE SPARE PARTS LIST TORCH ERSATZTEILLISTE SCLAUCHPAKET PIEZAS DE REPUESTO ANTORCHA	CODICE CODE KODE
11	Guaina guidafilo ø0.6-0.8 3m blu Gaine pour fil ø0.6-0.8 3m bleu Wire guide hose ø0.6-0.8 3m blue Drahtführungsseele ø0.6-0.8 3m blue Vaina guia hilo ø0.6-0.8 3m blue	722437
11	Guaina guidafilo ø1.0-1.2 3m rossa Gaine pour fil ø1.0-1.2 3m rouge Wire guide hose ø1.0-1.2 3m red Drahtführungsseele ø1.0-1.2 3m rot Vaina guia hilo ø1.0-1.2 3m roja	722689

REF.	ELENCO PEZZI RICAMBIO TORCIA LISTE PIECES DETACHEES TORCHE SPARE PARTS LIST TORCH ERSATZTEILLISTE SCLAUCHPAKET PIEZAS DE REPUESTO ANTORCHA	CODICE CODE KODE

ELENCO PEZZI DI RICAMBIO
LISTE PIECES DETACHEES
SPARE PARTS LIST
ERSATZTEILLISTE
PIEZAS DE REPUESTO

TECHNOMIG 215 DUAL SYNERGIC

Esploso macchina, Dessin appareil, Machine drawing, Explosions Zeichnung des Geräts, Diseño seccionado maquina.

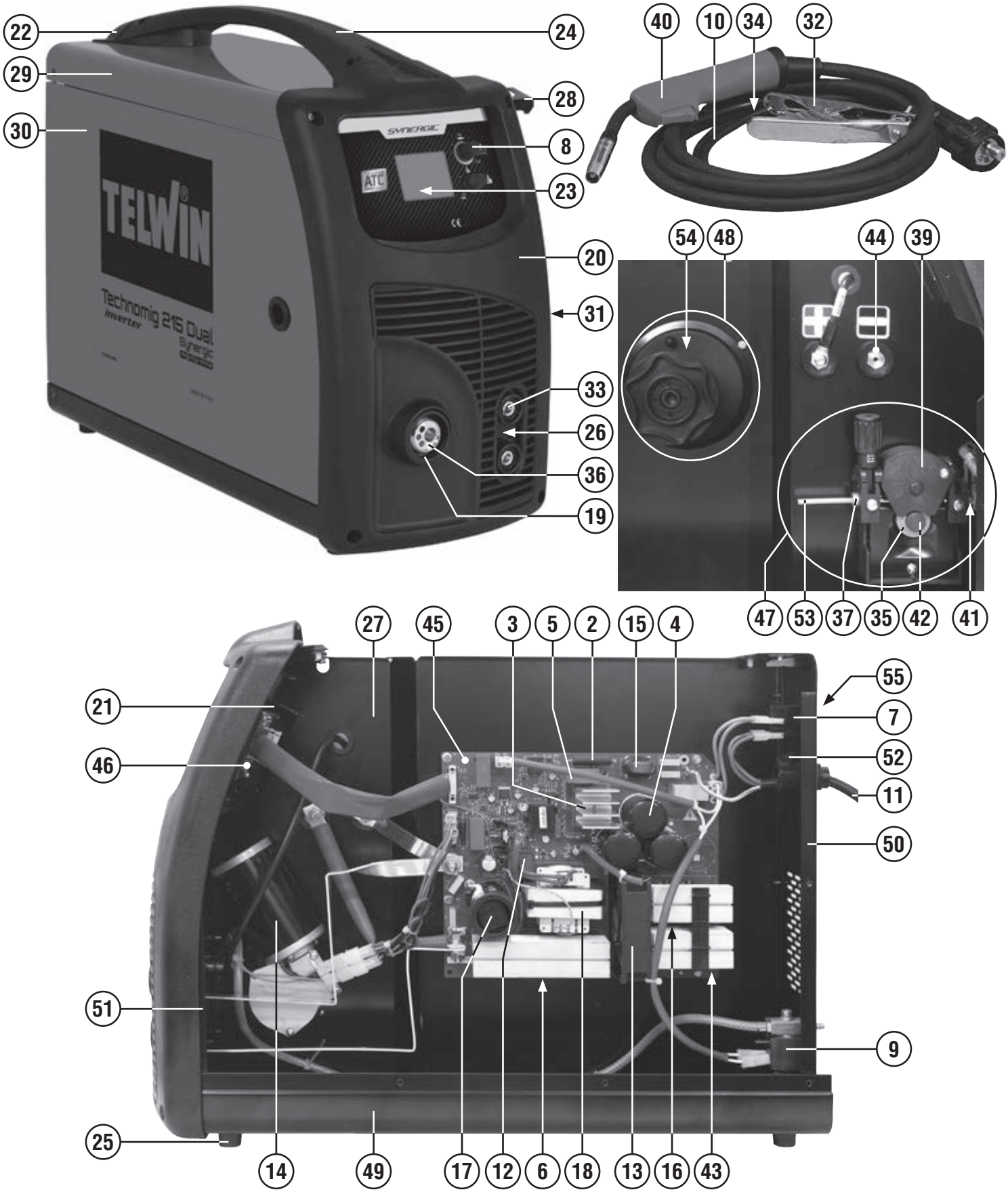

REF.	ELENCO PEZZI DI RICAMBIO PIECES DETACHEES SPARE PARTS LIST ERSATZTEILLISTE PIEZAS DE REPUESTO	CODICE CODE KODE
2	Res. Filo 47r 8w 5% Res. Fil 47r 8w 5% Res. Wire 47r 8w 5% Res. Draht 47r 8w 5% Res. Hilo 47r 8w 5%	112048
3	Raddrizzatore monofase Redresseur monophase Single-phase rectifier Einphasiger gleichrichter Rectificador monofasico	112357
4	Condensatore Condensateur Capacitor Kondensator Condensador	112694
5	Rele' Relais Relais Relais Relais	116320
6	Diodo Diode Diode Diode Diodo	116839
7	Interruttore Interrupteur Switch Schalter Interruptor	121248
8	Manopola encoder d.15 Poignee encoder d.15 Encoder knob d.15 Griff encoder d.15 Manija encoder d.15	121315
9	Elettrovalvola Electrovanne Electrovalve Elektroventil Electrovalvula	121800
10	Cavo 16 mmq 3 m - spina atlas 25 Cable 16 mmq 3 m - fiche atlas 25 Cable 16 mmq 3 m - plug atlas 25 Kabel 16 mmq 3 m - stecker atlas 25 Cable 16 mmq 3 m - enchufe atlas 25	123437
11	Cavo alimentazione Cable de reseau Mains cable Netzkabel Cable de alimentation	132157
12	Trasformatore di corrente Transformateur de courant Current transformer Stromwandler Transformador de corriente	152230
13	Ventilatore Ventilateur Fan Ventilator Ventilador	152269
14	Motore Moteur Motor Motor Motor	153033
15	Induttanza filtro Inductance filter Filter inductance Filter drossel Induccion filtro	164741
16	Trasformatore x flyback Transformateur x flyback Transformer x flyback Transformator x flyback Transformador x flyback	169700
17	Induttanza uscita Inductance output Output inductance Output drossel Induccion output	169808
18	Trasformatore potenza Transformateur de puissance Power trafo Leistungstransformer Transformador de potencia	169822
19	Protezione attacco torcia Support isolant torche Torch connection protection Brennersisolierlager Sosten isolator antorcha	312105
20	Frontale Partie frontal Front panel Geraetefront Frontal	321135
21	Supporto scheda Support fiche Card holder Kartehalter Sosten tarjeta	321196
22	Copertura manico Capot poignee Handlecover Handgriffsdeckel Copertura manija	321142

REF.	ELENCO PEZZI DI RICAMBIO PIECES DETACHEES SPARE PARTS LIST ERSATZTEILLISTE PIEZAS DE REPUESTO	CODICE CODE KODE
23	Spessore per schermo Blindage Shield Schild Proteccion	321194
24	Manico Poignee Handle Handgriff Manija	322883
25	Piedino Embout Foot Fuss Pie	323001
26	Supporto presa atlas Support prise atlas Socket holder atlas Steckdose halterung atlas Soporte enchufe atlas	645787
27	Diaframma Diafragma Diaphragm Diaphragma Diaphragme	645973
28	Gancio appendi torcia Accrocheur torche Torch hook Haken fuer brenner Gancho fijacion antorcha	645704
29	Kit mantello Kit capot Cover kit Deckel kit Kit panel de cobertura	981996
30	Sportello Guichet Door Tuer Portezuela	656142
31	Fianco Partie laterale Side panel Seitenblech Flanco	656143
32	Toledo 250 pinza di massa 250a Toledo 250 pince de masse 250a Toledo 250 work clamp 250a Toledo 250 masseklemme 250a Toledo 250 pinza de masa 250a	712030
33	Presa atlas 25mmq Prise atlas 25mmq Socket atlas 25mmq Steckdose atlas 25mmq Enchufe atlas 25mmq	712035
34	Spina atlas 25mmq Fiche atlas 25mmq Atlas plug 25mmq Atlas stecker 25mmq Enchufe atlas 25mmq	712039
35	Rullino traino 2r 0,6fe-0,8fe "f" Galet 2r 0,6fe-0,8fe "f" Feed roll 2r 0,6fe-0,8fe "f" Vorschubrolle 2r 0,6fe-0,8fe "f" Roldana 2r 0,6fe-0,8fe "f"	722112
36	Attacco torcia Attelage torche Torch connection Brenneranschluss Enganche soplete	723229
37	Entrata guidafilo Entree guide fil Wire guide inlet Drahtfuehrungsseeleeingang Entrata vaina guiadera alambre	742064
38	Rullino traino 2r 0,8al-1,0al "f" Galet 2r 0,8al-1,0al "f" Feed roll 2r 0,8al-1,0al "f" Vorschubrolle 2r 0,8al-1,0al "f" Roldana 2r 0,8al-1,0al "f"	742090
39	Ancora controrullino Ancre contre-galet Anchor for pressure roller Anker für gegenrolle Ancora para contra roldana	742096
40	Mt15 torcia mig 3m (red) Mt15 torche mig 3m (red) Mt15 mig torch 3m (red) Mt15 mig brenner 3m (red) Mt15 antorcha mig 3m (red)	742180
41	Tubo capillare ø 2x5 Tuyau capillaire ø 2x5 Wire conduit ø 2x5 Kapillarrohr ø 2x5 Tubo capilar ø 2x5	742365
42	Vite bloccarullino Vis ferme galet Rollerfixing screw Rollerhalterschraube Tornillo bloque roldana	742397
43	Kit igbt + diodo Kit igbt + diode Igbt + diode kit Igbt + diode kit Kit igbt + diodo	980990

REF.	ELENCO PEZZI DI RICAMBIO PIECES DETACHEES SPARE PARTS LIST ERSATZTEILLISTE PIEZAS DE REPUESTO	CODICE CODE KODE
44	Kit morsetto Kit borne Clamp kit Zange kit Kit borne	981383
45	Kit scheda completa Kit fiche complete Complete pcb kit Komplette karte kit Kit tarjeta completa	981494
46	Kit scheda pannello Kit platine frontal Kit front panel card Kit geraetefrontskarte Kit tarjeta frontal	981495
47	Kit traino due rulli Kit devidoir 2 roleaux Kit 2 rolls wirefeeder Kit 2 raeder drahtvorschub Kit alimentador de hilo 2 rollos	981496
48	Kit aspo 15kg Kit support bobine 15kg Reel kit 15kg Wickler kit 15kg Kit aspa 15kg	981703
49	Kit fondo Kit chassis Bottom kit Bodenteil kit Kit fondo	981498
50	Kit retro Kit partie arriere Back panel kit Rueckseite kit Kit trasera	981499
51	Kit frontale Kit partie frontal Front panel kit Geraetefront kit Kit frontal	981500
52	Kit pressacavo + ghiera Kit presse cable + embout Kit cable bushing + ring nut Kit kabelhalter + nutmutter Kit prensa cable + virola	990046
53	Kit guaina entrata motore Kit gaine entree moteur Gas hose kit Drahtfuehrungsseelekit Kit vaina guiadera alambre	990097
54	Distanziale per aspo Entretoise pour support bobine Reel spacer Distanzstueck Espàciador por aspa	321210
55	Copri interruttore Couvre interrupteur Switch cover Schalterdeckel Cubre interruptor	122353

Schema elettrico, Schéma électrique, Diagram, Schaltplan, Esquema de conexiones.

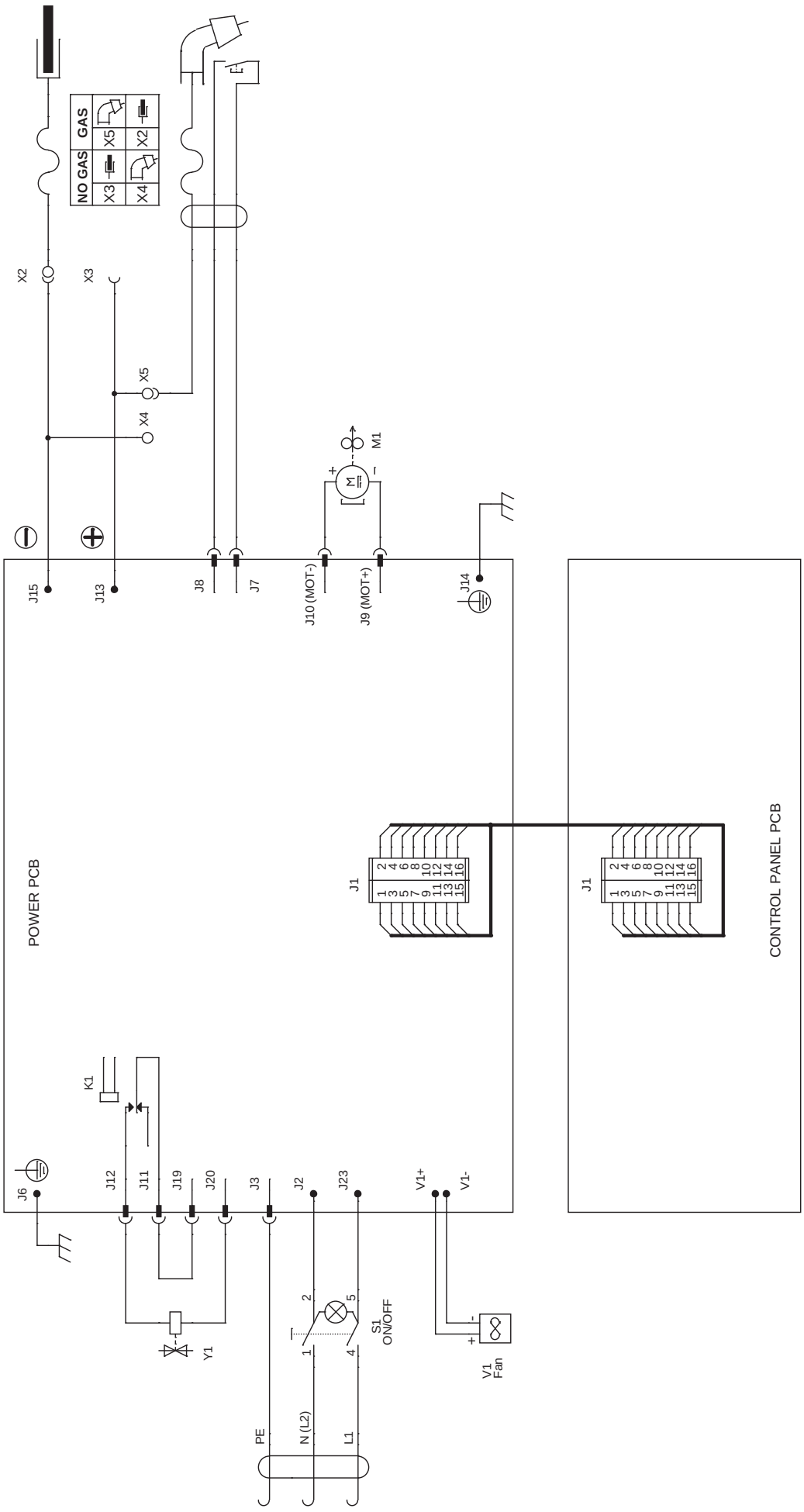

Esploso torcia, Dessin torche, Torch drawing, Schlauchpaket - Explosionszeichnung, Diseño seccionado antorcha.

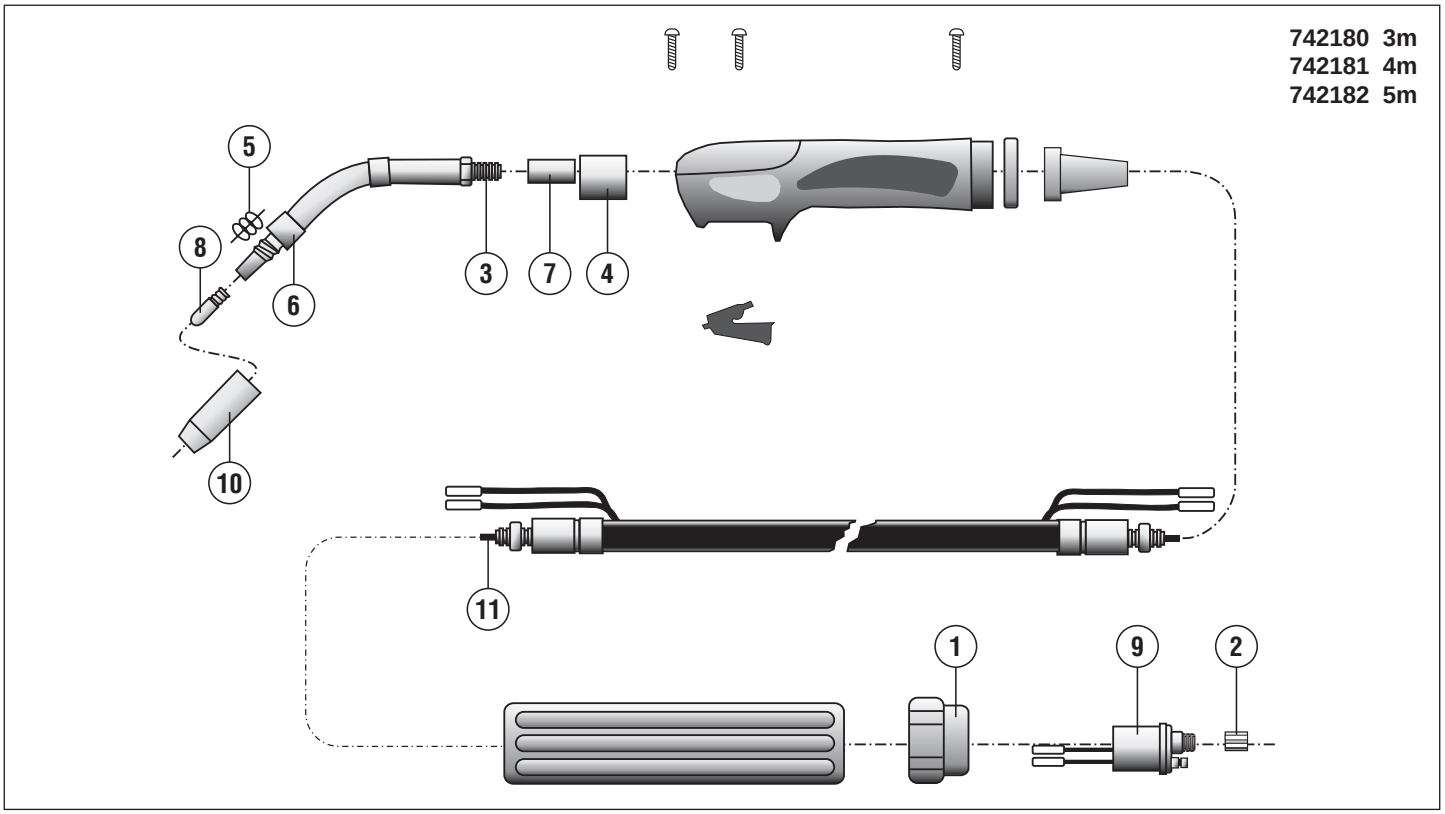

REF.	ELENCO PEZZI RICAMBIO TORCIA LISTE PIECES DETACHEES TORCHE SPARE PARTS LIST TORCH ERSATZTEILLISTE SCLAUCHPAKET PIEZAS DE REPUESTO ANTORCHA	CODICE CODE KODE
1	Ghiera fissaggio Embout fixage Ring nut Nutmutter Virola por fiyacion	722007
2	Dado fissaggio guaina Ecrou fixage gaine Liner nut Befestigungsmutter Dado por fiyacion vaina	722013
3	Lancia mt15 Lance mt15 Swan neck mt15 Brennerhals mt15 Encorvado mt15	722305
4	Isolante corpo torcia Isolant corps de torche Torch connection insulation Brenneranschlussblock isolierteil Aislador cuerpo de antorcha	722693
5	Molla per ugello tw160–180 mt15,spoolgun Ressort p. Buse tw160–180,mt15,spoolgun Nozzle spring tw 160–180, mt15, spoolgun Düsenfeder tw 160–180, mt15, spoolgun Muelle inyector tw160–180,mt15,spoolgun	722319
6	Isolante diffusore Isolant pour diffuseur Diffuser insulation Isolierbuchse Aislador diffusor	722326
7	Corpo torcia Corps de torche Torch connection Brenneranschlussblock Cuerpo de antorcha	722325
8	Tubetto di contatto d. 0,6 Mm fe Tube contact d. 0,6 Mm fe Contact tip d. 0,6 Mm fe Kontaktdüse d. 0,6 Mm fe Tubito de contacto d. 0,6 Mm fe	722415
8	Tubetto di contatto d. 0,8 Mm fe m6 Tube contact d. 0,8 Mm fe m6 Contact tip d. 0,8 Mm fe m6 Kontaktdüse d. 0,8 Mm fe m6 Tubito de contacto d. 0,8 Mm fe m6	722416
9	Corpo torcia Corp de torche Torch assy Brennerskörper Enganche antorcha	722441
10	Ugello cilindrico tw160–180,mt15,sp.Gun Bec conique tw160–180,mt15,sp.Gun Cylindrical nozzle tw160–180,mt15,sp.Gun Zylindrische düse tw160–180,mt15,sp.Gun Inyect. Cilindrico tw160–180,mt15,sp.Gun	722149
10	Ugello conico tw 160–180, mt15,spoolgun Buse conique tw 160–180, mt15,spoolgun Conical nozzle tw 160–180, mt15,spoolgun Gasdüse konisch tw 160–180,mt15,spoolgun Inyector conico tw 160–180,mt15,spoolgun	722423

REF.	ELENCO PEZZI RICAMBIO TORCIA LISTE PIECES DETACHEES TORCHE SPARE PARTS LIST TORCH ERSATZTEILLISTE SCLAUCHPAKET PIEZAS DE REPUESTO ANTORCHA	CODICE CODE KODE
11	Guaina guidafilo ø0.6-0.8 3m blu Gaine pour fil ø0.6-0.8 3m bleu Wire guide hose ø0.6-0.8 3m blue Drahtführungsseele ø0.6-0.8 3m blue Vaina guia hilo ø0.6-0.8 3m blue	722437
11	Guaina guidafilo ø1.0-1.2 3m rossa Gaine pour fil ø1.0-1.2 3m rouge Wire guide hose ø1.0-1.2 3m red Drahtführungsseele ø1.0-1.2 3m rot Vaina guia hilo ø1.0-1.2 3m roja	722689

REF.	ELENCO PEZZI RICAMBIO TORCIA LISTE PIECES DETACHEES TORCHE SPARE PARTS LIST TORCH ERSATZTEILLISTE SCLAUCHPAKET PIEZAS DE REPUESTO ANTORCHA	CODICE CODE KODE

ELENCO PEZZI DI RICAMBIO
LISTE PIECES DETACHEES
SPARE PARTS LIST
ERSATZTEILLISTE
PIEZAS DE REPUESTO

TECHNOMIG 225 DUAL SYNERGIC

Esploso macchina, Dessin appareil, Machine drawing, Explosions Zeichnung des Geräts, Diseño seccionado maquina.

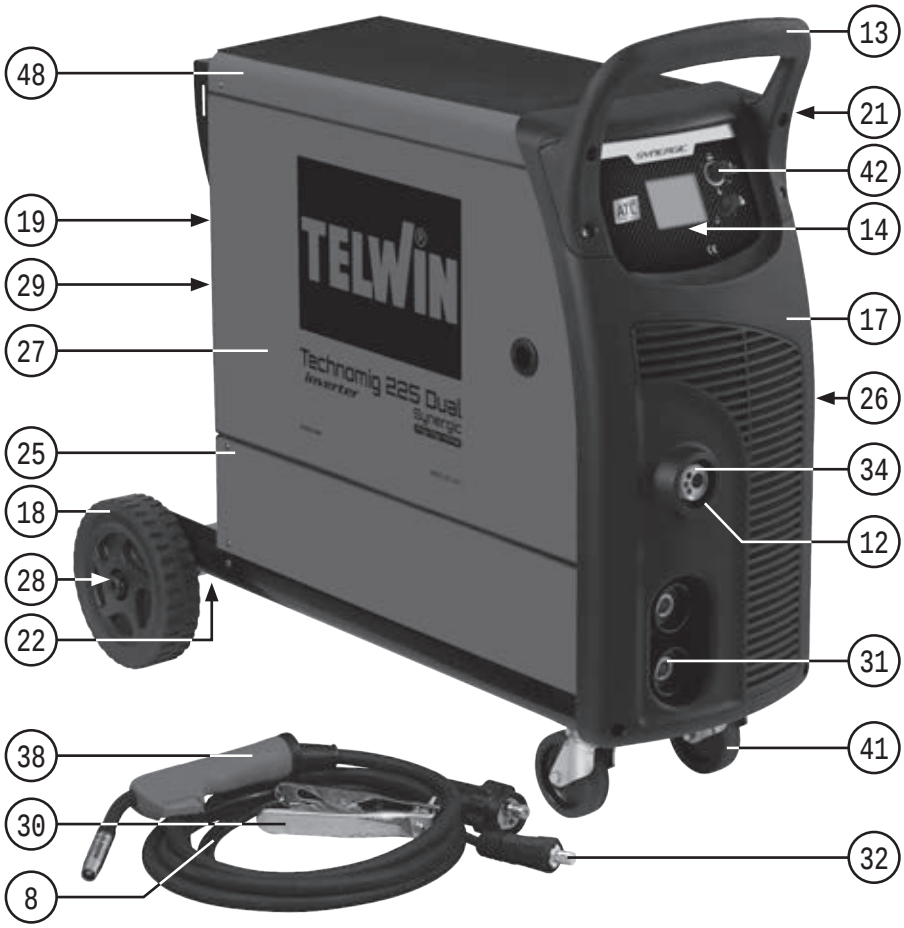

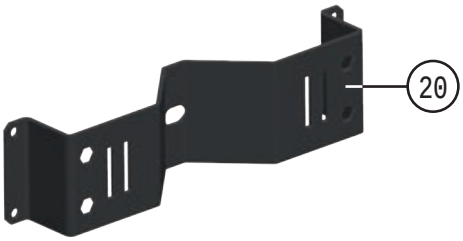

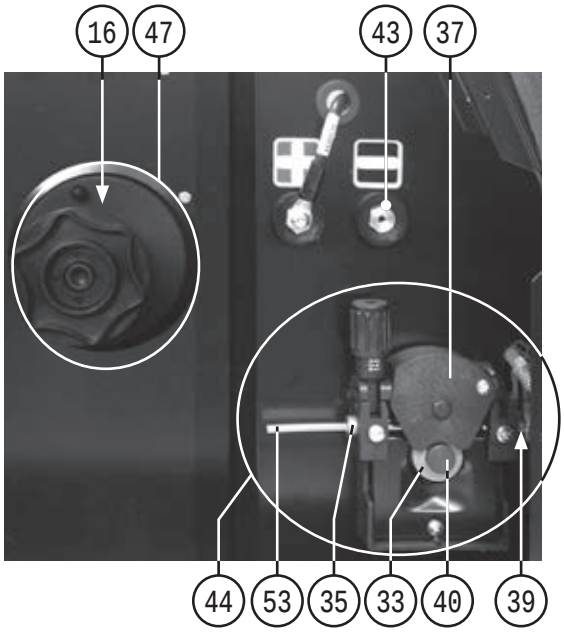

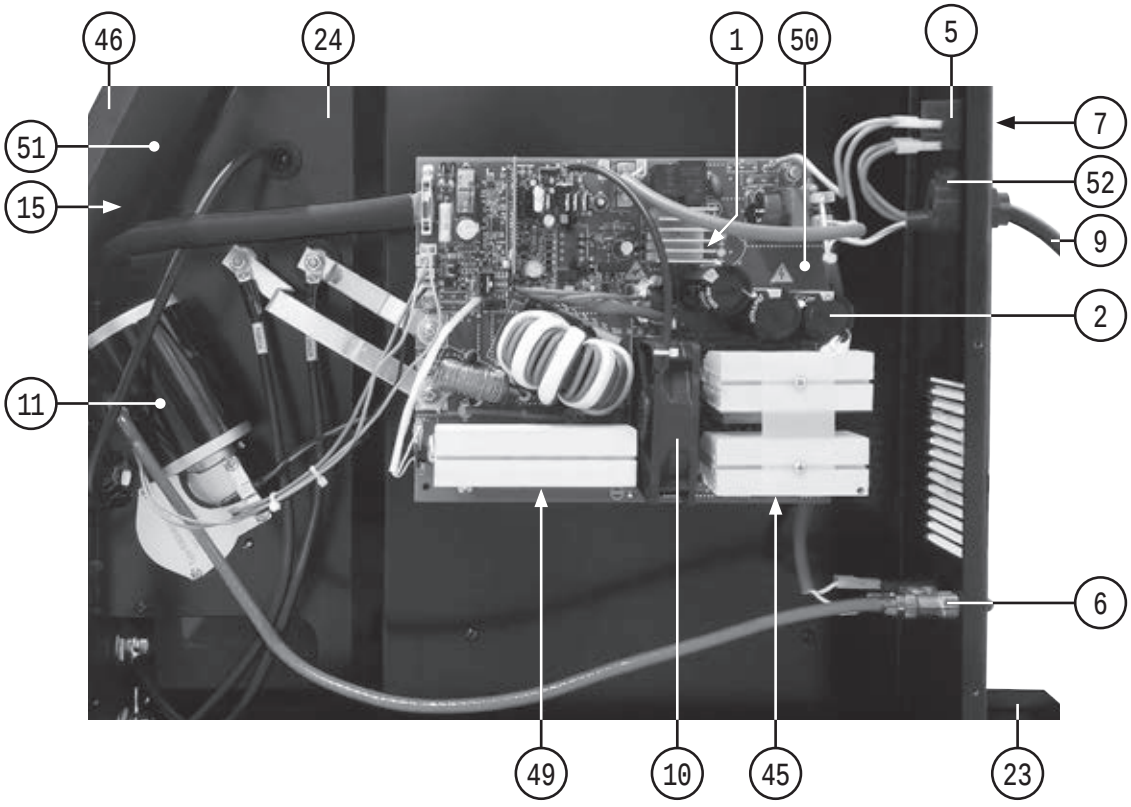

REF.	ELENCO PEZZI DI RICAMBIO PIECES DETACHEES SPARE PARTS LIST ERSATZTEILLISTE PIEZAS DE REPUESTO	CODICE CODE KODE
1	Kit ponte monofase Kit pont monophase Single phase bridge kit Einfasige brücke kit Kit puente monofasico	981581
2	Kit condensatore snap-in Kit condensateur snap-in Condenser kit snap-in Kondensator kit snap-in Kit condensator snap-in	981584
5	Interruttore Interrupteur Switch Schalter Interruptor	121248
6	Elettrovalvola Electrovanne Electrovalve Elektroventil Electrovalvula	121800
7	Copri interruttore Couvre interrupteur Switch cover Schalterdeckel Cubre interruptor	122353
8	Cavo 16 mmq 3 m - spina atlas 25 Cable 16 mmq 3 m - fiche atlas 25 Cable 16 mmq 3 m - plug atlas 25 Kabel 16 mmq 3 m - stecker atlas 25 Cable 16 mmq 3 m - enchufe atlas 25	123437
9	Cavo alimentazione Cable de reseau Mains cable Netzkabel Cable de alimentation	132157
10	Ventilatore Ventilateur Fan Ventilator Ventilador	152294
11	Motore Moteur Motor Motor Motor	153033
12	Protezione attacco torcia Support isolant torche Torch connection protection Brennersisolierlager Sosten isolator antorcha	312105
13	Assieme manico Set poignee Handle set Handgriff set Set manija	321165
14	Spessore per schermo Blindage Shield Schild Proteccion	321194
15	Supporto scheda Support fiche Card holder Kartehalter Sosten tarjeta	321196
16	Distanziale per aspo Entretoise pour support bobine Reel spacer Distanzstueck Espàciador por aspa	321210
17	Frontale Partie frontal Front panel Gerätefront Frontal	321391
18	Ruota fissa Roue fixe Fixed wheel Fixes rad Rueda firme	322201
19	Retro Partie arriere Back panel Rückseite Trasera	642848
20	Staffa portabombola Etrier porte-bouteille Bottle-holder bracket Kasten fuer flasche Estribo porta bombona	645673
21	Gancio appendi torcia Accrocheur torche Torch hook Haken fuer brenner Gancho fijacion antorcha	645704
22	Staffa asse ruote Bride axe roues Wheels axle braket Radachsebuegel Estribo eje ruedas	645715
23	Fondo Chassis Bottom Bodenteil Fondo	645858

REF.	ELENCO PEZZI DI RICAMBIO PIECES DETACHEES SPARE PARTS LIST ERSATZTEILLISTE PIEZAS DE REPUESTO	CODICE CODE KODE
24	Diaframma Diaphragme Diaphragm Diaphragma Diafragma	645939
25	Fianco destro Partie lateral droite Right side panel Rechte seite Flanco derecho	651221
26	Fianco sx Partie lateral gauche Left side panel Linkes seitenteil Panel izquierdo	656296
27	Sportello Guichet Door Tür Portezuela	656297
28	Asse ruote Axe roues Wheels axle Radachse Eje ruedas	681065
29	Perno sportello Pivot guichet Door pin Tuerzapfen Perno portezuela	691012
30	Toledo 250 pinza di massa 250a Toledo 250 pince de masse 250a Toledo 250 work clamp 250a Toledo 250 masseklemme 250a Toledo 250 pinza de masa 250a	712030
31	Presa atlas 50mmq Prise atlas 50mmq Atlas socket 50mmq Atlas steckdose 50mmq Enchufe atlas 50mmq	712036
32	Spina atlas 50mmq Fiche atlas 50mmq Atlas plug 50mmq Atlas stecker 50mmq Enchufe atlas 50mmq	712040
33	Rullino traino 2r 0,6fe-0,8fe “f” Galet 2r 0,6fe-0,8fe “f” Feed roll 2r 0,6fe-0,8fe “f” Vorschubrolle 2r 0,6fe-0,8fe “f” Roldana 2r 0,6fe-0,8fe “f”	722112
34	Attacco torcia Attelage torche Torch connection Brenneranschluss Enganche soplete	723229
35	Entrata guidafilo Entree guide fil Wire guide inlet Drahtfuehrungsseeleeingang Entrata vaina guiadera alambre	742064
36	Rullino traino 2r 0,8al-1,0al “f” Galet 2r 0,8al-1,0al “f” Feed roll 2r 0,8al-1,0al “f” Vorschubrolle 2r 0,8al-1,0al “f” Roldana 2r 0,8al-1,0al “f”	742090
37	Ancora controrullino Ancre contre-galet Anchor for pressure roller Anker für gegenrolle Ancora para contra roldana	742096
38	Mt15 torcia mig 3m (red) Mt15 torche mig 3m (red) Mt15 mig torch 3m (red) Mt15 mig brenner 3m (red) Mt15 antorcha mig 3m (red)	742180
39	Tubo capillare ø 2x5 Tuyau capillaire ø 2x5 Wire conduit ø 2x5 Kapillarrohr ø 2x5 Tubo capilar ø 2x5	742365
40	Vite bloccarullino Vis ferme galet Rollerfixing screw Rollerhalterschraube Tornillo bloque roldana	742397
41	Kit ruote girevoli + freno d. 80mm Kit roues tournantes + frein d. 80mm Swivel wheels + brake kit d. 80mm Lenkrollen + bremse kit d. 80mm Kit ruedas giratorias + freno d. 80mm	804221
42	Kit manopola encoder Kit poignee encoder Encoder knob kit Encodergriff kit Kit manija encoder	980520
43	Kit morsetto Kit borne Clamp kit Zange kit Kit borne	981383
44	Kit traino due rulli Kit devidoir 2 roleaux Kit 2 rolls wirefeeder Kit 2 raeder drahtvorschub Kit alimentador de hilo 2 rollos	981496

REF.	ELENCO PEZZI DI RICAMBIO PIECES DETACHEES SPARE PARTS LIST ERSATZTEILLISTE PIEZAS DE REPUESTO	CODICE CODE KODE
45	Kit diodi Kit diodes Diode kit Diode kit Kit diodo	981593
46	Kit frontale Kit partie frontal Front panel kit Geraetefront kit Kit frontal	981699
47	Kit aspo 15kg Kit support bobine 15kg Reel kit 15kg Wickler kit 15kg Kit aspa 15kg	981703
48	Kit mantello Kit capot Cover kit Deckelkit Kit panel de cobertura	981740
49	Kit igbt + diodi Kit igbt + diodes Kit igbt + diodes Kit igbt + dioden Kit igbt + diodos	982027
50	Kit scheda potenza Kit carte puissance Power board kit Leistungskartekit Kit tarjeta potencia	982327
51	Kit scheda pannello Kit platine frontal Front panel card kit Gerätefrontskarte kit Kit tarjeta frontal	982330
52	Kit pressacavo + ghiera Kit presse cable + embout Kit cable bushing + ring nut Kit kabelhalter + nutmutter Kit prensa cable + virola	990046
53	Kit guaina entrata motore Kit gaine entree moteur Gas hose kit Drahtfuehrungsseelekit Kit vaina guiadera alambre	990097

Schema elettrico, Schéma électrique, Diagram, Schaltplan, Esquema de conexiones.

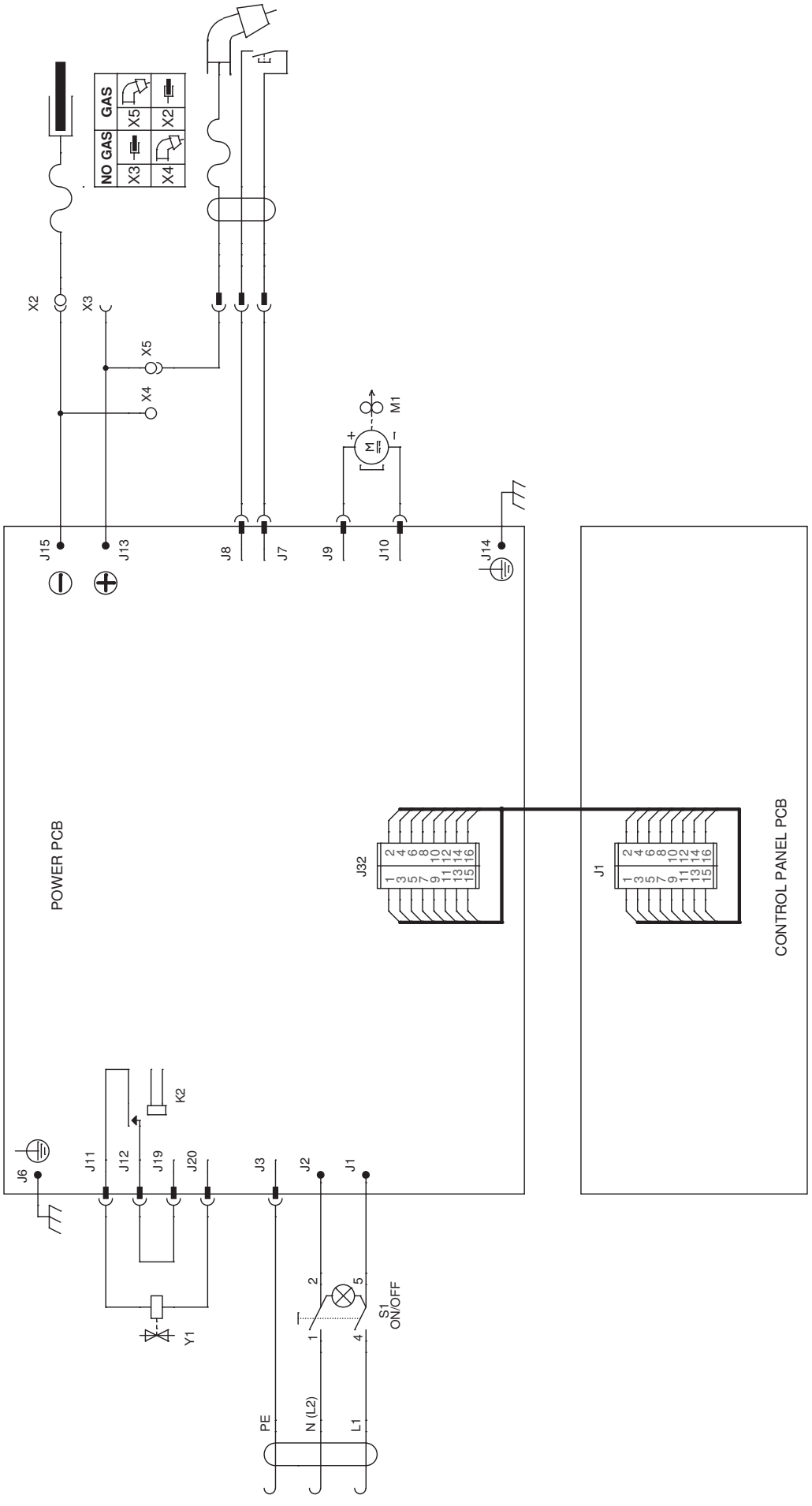

Esploso torcia, Dessin torche, Torch drawing, Schlauchpaket - Explosionszeichnung, Diseño seccionado antorcha.

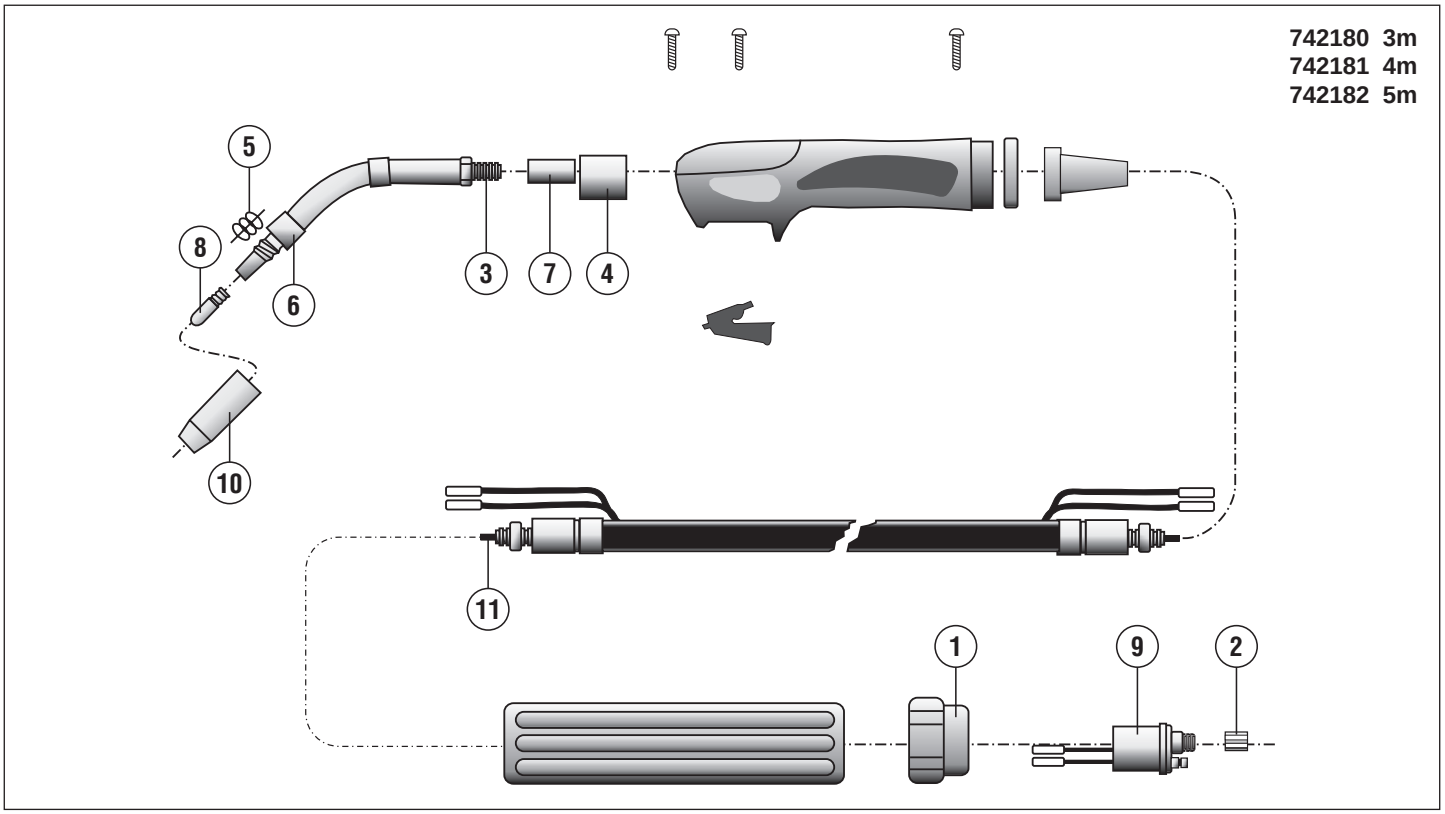

REF.	ELENCO PEZZI RICAMBIO TORCIA LISTE PIECES DETACHEES TORCHE SPARE PARTS LIST TORCH ERSATZTEILLISTE SCLAUCHPAKET PIEZAS DE REPUESTO ANTORCHA	CODICE CODE KODE
1	Ghiera fissaggio Embout fixage Ring nut Nutmutter Virola por fiyacion	722007
2	Dado fissaggio guaina Ecrou fixage gaine Liner nut Befestigungsmutter Dado por fiyacion vaina	722013
3	Lancia mt15 Lance mt15 Swan neck mt15 Brennerhals mt15 Encorvado mt15	722305
4	Isolante corpo torcia Isolant corps de torche Torch connection insulation Brenneranschlussblock isolierteil Aislador cuerpo de antorcha	722693
5	Molla per ugello tw160–180 mt15,spoolgun Ressort p. Buse tw160–180,mt15,spoolgun Nozzle spring tw 160–180, mt15, spoolgun Düsenfeder tw 160–180, mt15, spoolgun Muelle inyector tw160–180,mt15,spoolgun	722319
6	Isolante diffusore Isolant pour diffuseur Diffuser insulation Isolierbuchse Aislador diffusor	722326
7	Corpo torcia Corps de torche Torch connection Brenneranschlussblock Cuerpo de antorcha	722325
8	Tubetto di contatto d. 0,6 Mm fe Tube contact d. 0,6 Mm fe Contact tip d. 0,6 Mm fe Kontaktdüse d. 0,6 Mm fe Tubito de contacto d. 0,6 Mm fe	722415
8	Tubetto di contatto d. 0,8 Mm fe m6 Tube contact d. 0,8 Mm fe m6 Contact tip d. 0,8 Mm fe m6 Kontaktdüse d. 0,8 Mm fe m6 Tubito de contacto d. 0,8 Mm fe m6	722416
9	Corpo torcia Corp de torche Torch assy Brennerskörper Enganche antorcha	722441
10	Ugello cilindrico tw160–180,mt15,sp.Gun Bec conique tw160–180,mt15,sp.Gun Cylindrical nozzle tw160–180,mt15,sp.Gun Zylindrische düse tw160–180,mt15,sp.Gun Inyect. Cilindrico tw160–180,mt15,sp.Gun	722149
10	Ugello conico tw 160–180, mt15,spoolgun Buse conique tw 160–180, mt15,spoolgun Conical nozzle tw 160–180, mt15,spoolgun Gasdüse konisch tw 160–180,mt15,spoolgun Inyector conico tw 160–180,mt15,spoolgun	722423

REF.	ELENCO PEZZI RICAMBIO TORCIA LISTE PIECES DETACHEES TORCHE SPARE PARTS LIST TORCH ERSATZTEILLISTE SCLAUCHPAKET PIEZAS DE REPUESTO ANTORCHA	CODICE CODE KODE
11	Guaina guidafilo ø0.6-0.8 3m blu Gaine pour fil ø0.6-0.8 3m bleu Wire guide hose ø0.6-0.8 3m blue Drahtführungsseele ø0.6-0.8 3m blue Vaina guia hilo ø0.6-0.8 3m blue	722437
11	Guaina guidafilo ø1.0-1.2 3m rossa Gaine pour fil ø1.0-1.2 3m rouge Wire guide hose ø1.0-1.2 3m red Drahtführungsseele ø1.0-1.2 3m rot Vaina guia hilo ø1.0-1.2 3m roja	722689

REF.	ELENCO PEZZI RICAMBIO TORCIA LISTE PIECES DETACHEES TORCHE SPARE PARTS LIST TORCH ERSATZTEILLISTE SCLAUCHPAKET PIEZAS DE REPUESTO ANTORCHA	CODICE CODE KODE

ELENCO PEZZI DI RICAMBIO
LISTE PIECES DETACHEES
SPARE PARTS LIST
ERSATZTEILLISTE
PIEZAS DE REPUESTO

TECHNOMIG 260 DUAL SYNERGIC

Esploso macchina, Dessin appareil, Machine drawing, Explosions Zeichnung des Geräts, Diseño seccionado maquina.

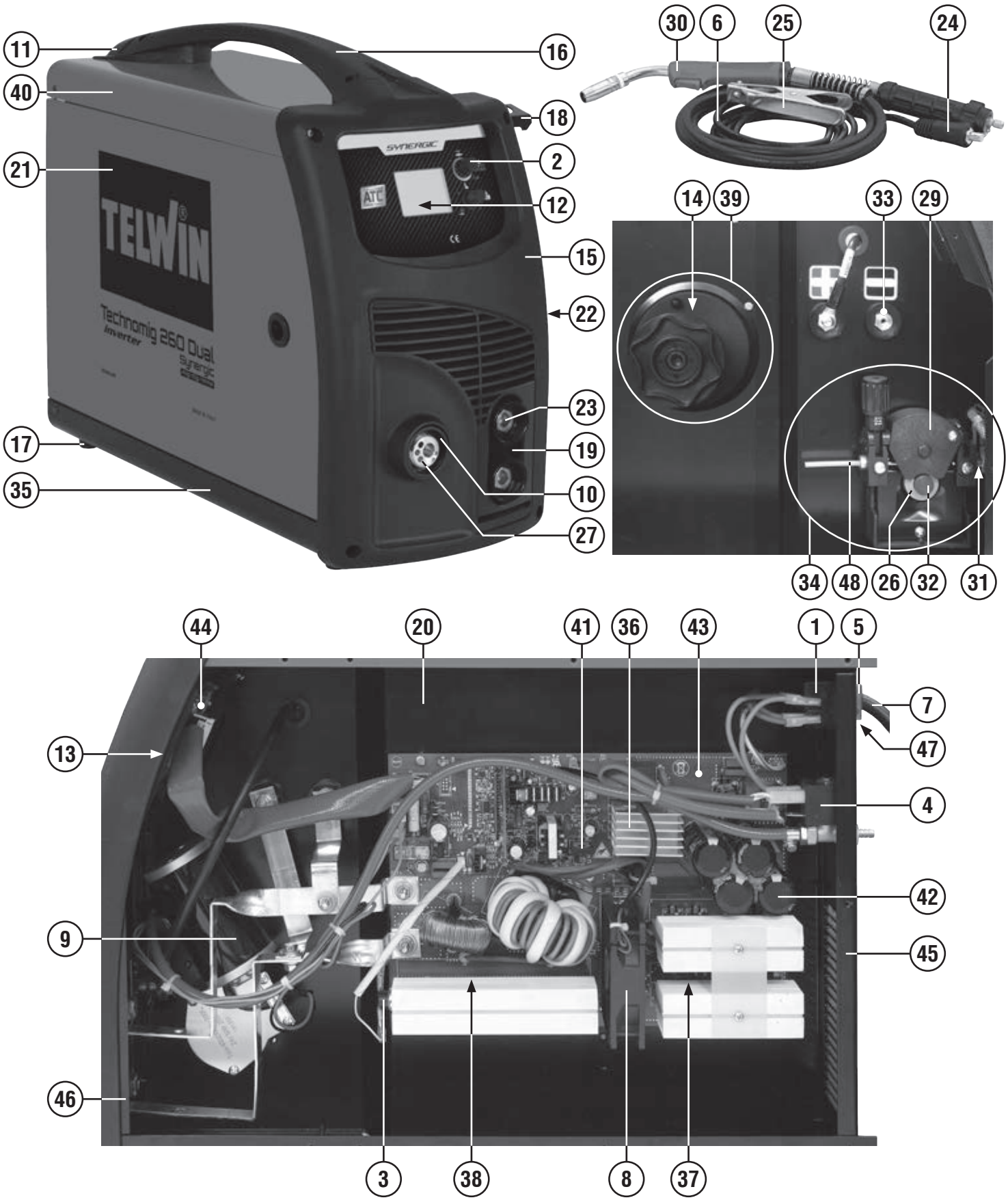

REF.	ELENCO PEZZI DI RICAMBIO PIECES DETACHEES SPARE PARTS LIST ERSATZTEILLISTE PIEZAS DE REPUESTO	CODICE CODE KODE
1	Interruttore Interrupteur Switch Schalter Interruptor	121248
2	Manopola encoder d.15 Poignee encoder d.15 Encoder knob d.15 Griff encoder d.15 Manija encoder d.15	121315
3	Termostato Thermostat Thermostat Thermostat Termostato	121748
4	Elettrovalvola Electrovanne Electrovalve Elektroventil Electrovalvula	121800
5	Copri interruttore Couvre interrupteur Switch cover Schalterdeckel Cubre interruptor	122353
6	Cavo Cable Cable Kabel Cable	124887
7	Cavo alim. 3g04.00 2.00 M Cable alim. 3g04.00 2.00 M Mains cable 3g04.00 2.00 M Netzkabel 3g04.00 2.00 M Cable alim. 3g04.00 2.00 M	132345
8	Ventilatore Ventilateur Fan Ventilator Ventilador	152293
9	Motore Moteur Motor Motor Motor	153033
10	Protezione attacco torcia Support isolant torche Torch connection protection Brennersisolierlager Sosten isolator antorcha	312105
11	Copertura manico Capot poignee Handlecover Handgriffsdeckel Copertura manija	321142
12	Spessore per schermo Blindage Shield Schild Proteccion	321194
13	Supporto scheda Support fiche Card holder Kartehalter Sosten tarjeta	321196
14	Distanziale per aspo Entretoise pour support bobine Reel spacer Distanzstueck Espàciador por aspa	321210
15	Frontale atlas 50mmq Partie frontal atlas 50mmq Front panel atlas 50mmq Geraetefront atlas 50mmq Frontal atlas 50mmq	321215
16	Manico Poignee Handle Handgriff Manija	322883
17	Piedino Embout Foot Fuss Pie	323001
18	Gancio appendi torcia Accrocheur torche Torch hook Haken fuer brenner Gancho fijacion antorcha	645704
19	Supporto presa atlas Support prise atlas Socket holder atlas Steckdose halterung atlas Soporte enchufe atlas	645728
20	Diaframma Diaphragme Diaphragm Diaphragma Diafragma	645920
21	Sportello Guichet Door Tuer Portezuela	656253
22	Fianco Partie laterale Side panel Seitenblech Flanco	656254
23	Presa atlas 50mmq Prise atlas 50mmq Atlas socket 50mmq Atlas steckdose 50mmq Enchufe atlas 50mmq	712036
24	Spina atlas 50mmq Fiche atlas 50mmq Atlas plug 50mmq Atlas stecker 50mmq Enchufe atlas 50mmq	712040
25	Toledo 300 pinza di massa 300a Toledo 300 borne de masse 300a Toledo 300 work clamp 300a Toledo 300 masseklemme 300a Toledo 300 borne de masa 300a	712231
26	Rullino traino 2r 0,6fe-0,8fe “f” Galet 2r 0,6fe-0,8fe “f” Feed roll 2r 0,6fe-0,8fe “f” Vorschubrolle 2r 0,6fe-0,8fe “f” Roldana 2r 0,6fe-0,8fe “f”	722112
27	Attacco torcia Attelage torche Torch connection Brenneranschluss Enganche soplete	723229
28	Rullino traino 2r 0,8al-1,0al “f” Galet 2r 0,8al-1,0al “f” Feed roll 2r 0,8al-1,0al “f” Vorschubrolle 2r 0,8al-1,0al “f” Roldana 2r 0,8al-1,0al “f”	742090
29	Ancora controrullino Ancre contre-galet Anchor for pressure roller Anker für gegenrolle Ancora para contra roldana	742096
30	Mt25 torcia mig 3m Mt25 torche mig 3m Mt25 mig torch 3m Mt25 mig brenner 3m Mt25 antorcha mig 3m	742183
31	Tubo capillare ø 2x5 Tuyau capillaire ø 2x5 Wire conduit ø 2x5 Kapillarrohr ø 2x5 Tubo capilar ø 2x5	742365
32	Vite bloccarullino Vis ferme galet Rollerfixing screw Rollerhalterschraube Tornillo bloque roldana	742397
33	Kit morsetto Kit borne Clamp kit Zange kit Kit borne	981383
34	Kit traino due rulli Kit devidoir 2 roleaux Kit 2 rolls wirefeeder Kit 2 raeder drahtvorschub Kit alimentador de hilo 2 rollos	981496
35	Kit fondo Kit chassis Bottom kit Bodenteil kit Kit fondo	981498
36	Kit ponte monofase Kit pont monophase Single phase bridge kit Einfasige brücke kit Kit puente monofasico	981581
37	Kit igbt + diodi Kit igbt + diodes Kit igbt + diodes Kit igbt + dioden Kit igbt + diodos	981582
38	Kit diodi Kit diodes Diode kit Diode kit Kit diodo	981583
39	Kit aspo 15kg Kit support bobine 15kg Reel kit 15kg Wickler kit 15kg Kit aspa 15kg	981703
40	Kit mantello Kit capot Cover kit Deckel kit Kit panel de cobertura	981996
41	Kit mosfet flyback Kit mosfet flyback Mosfet flyback kit Mosfet flyback kit Kit mosfet flyback	982126
42	Kit condensatore snap-in Kit condensateur snap-in Condenser kit snap-in Kondensator kit snap-in Kit condensator snap-in	982183
43	Kit scheda completa Kit platine complete Complete control pcb kit Komplette steurungskarte kit Kit tarjeta de controlo completa	982185
44	Kit scheda pannello Kit scheda pannello Kit scheda pannello Kit scheda pannello Kit scheda pannello	982187
45	Kit retro Kit partie arriere Back panel kit Rückseite kit Kit trasera	982188
46	Kit frontale Kit partie frontal Front panel kit Gerätefront kit Kit frontal	982189
47	Kit pressacavo + ghiera Kit presse cable + embout Kit cable bushing + ring nut Kit kabelhalter + nutmutter Kit prensa cable + virola	990046
48	Kit guaina entrata motore Kit gaine entree moteur Gas hose kit Drahtfuehrungsseelekit Kit vaina guiadera alambre	990097

Schema elettrico, Schéma électrique, Diagram, Schaltplan, Esquema de conexiones.

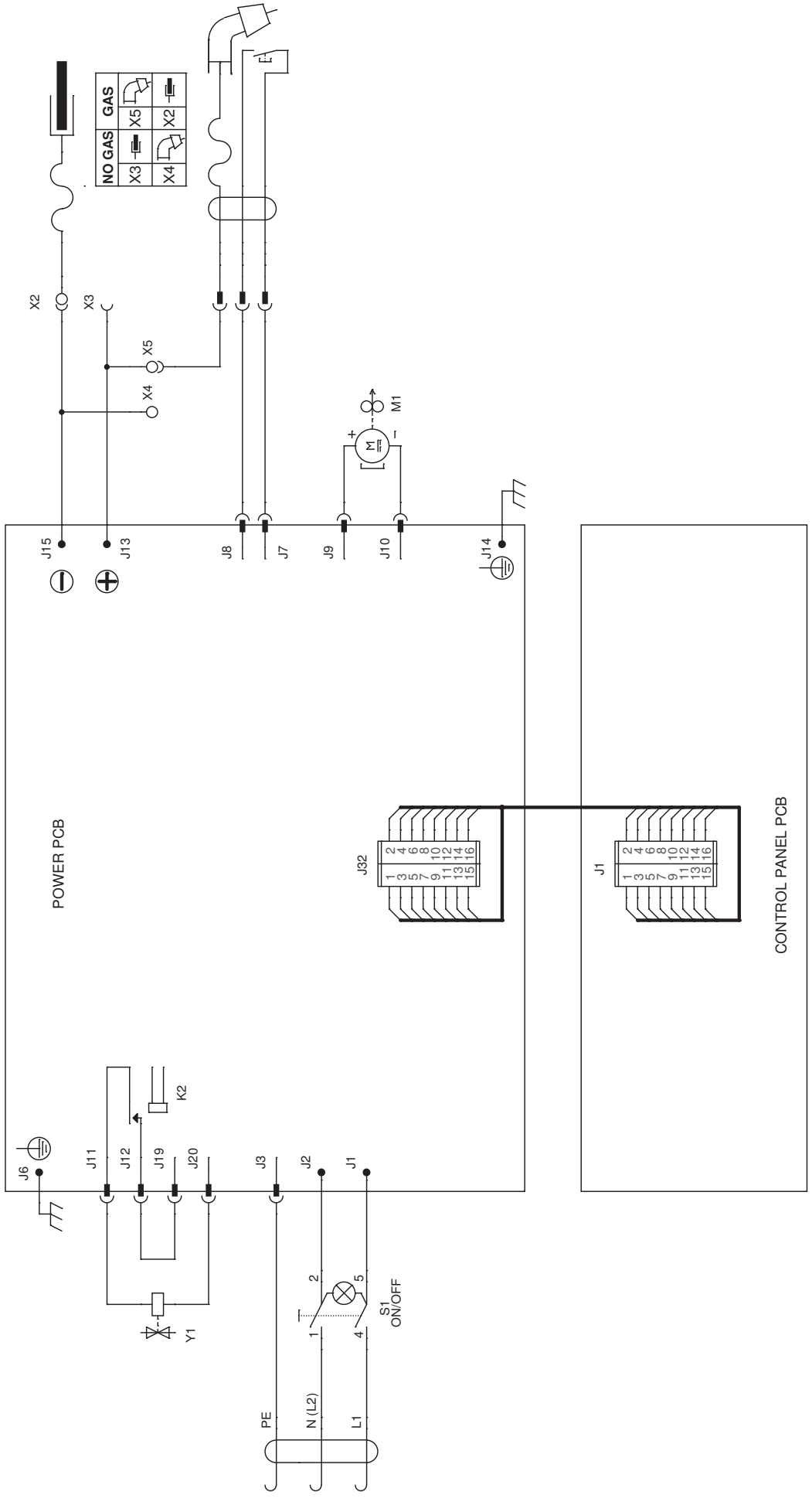

Esploso torcia, Dessin torche, Torch drawing, Schlauchpaket - Explosionszeichnung, Diseño seccionado antorcha.

742183 3m
742184 4m
742185 5m

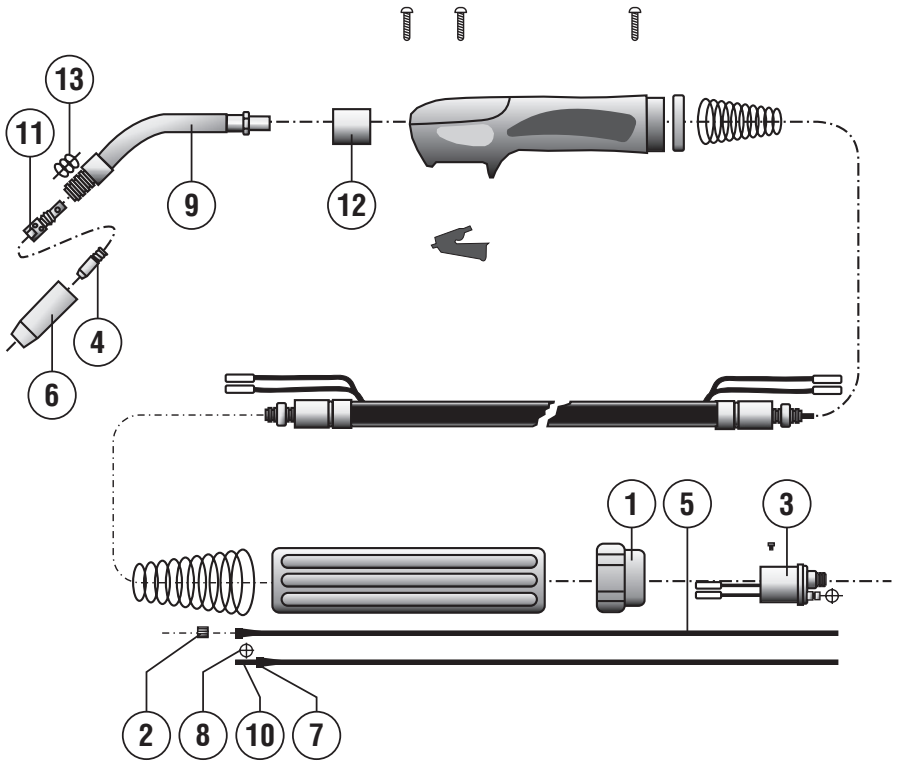

REF.	ELENCO PEZZI RICAMBIO TORCIA LISTE PIECES DETACHEES TORCHE SPARE PARTS LIST TORCH ERSATZTEILLISTE SCLAUCHPAKET PIEZAS DE REPUESTO ANTORCHA	CODICE CODE KODE
1	Ghiera fissaggio Embout fixage Ring nut Nutmutter Virola por fiyacion	722007
2	Dado fissaggio guaina Ecrou fixage gaine Liner nut Befestigungsmutter Dado por fiyacion vaina	722013
3	Corpo torcia Corp de torche Torch assy Brennerskörper Enganche antorcha	722441
4	Tubetto di contatto d. 1,2 Mm fe Tube contact d. 1,2 Mm fe Contact tip d. 1,2 Mm fe Kontaktdüse d. 1,2 Mm fe Tubito de contacto d. 1,2 Mm fe	722682
4	Tubetto di contatto d. 1 Mm fe m6 l=28mm Tube contact d. 1 Mm fe m6 l=28mm Contact tip d. 1 Mm fe m6 l=28mm Kontaktdüse d. 1 Mm fe m6 l=28mm Tubito de contacto d. 1 Mm fe m6 l=28mm	722681
4	Tubetto di contatto d. 0,8 Mm m6 Tube contact d. 0,8 Mm m6 Contact tip d. 0,8 Mm m6 Kontaktdüse d. 0,8 Mm m6 Tubito de contacto d. 0,8 Mm m6	722680
4	Tubetto di contatto d. 1,2 Mm al/flux m6 Tube contact d. 1,2 Mm al/flux m6 Contact tip d. 1,2 Mm al/flux m6 Kontaktdüse d. 1,2 Mm al/flux m6 Tubito de contacto d. 1,2 Mm al/flux m6	722553
4	Tubetto di contatto d. 1 Mm al/flux m6 Tube contact d. 1 Mm al/flux m6 Contact tip d. 1 Mm al/flux m6 Kontaktdüse d. 1 Mm al/flux m6 Tubito de contacto d. 1 Mm al/flux m6	722552
4	Tubetto di contatto d. 0,6 Mm fe Tube contact d. 0,6 Mm fe Contact tip d. 0,6 Mm fe Kontaktdüse d. 0,6 Mm fe Tubito de contacto d. 0,6 Mm fe	722415
5	Guaina guidafilo ø0.6-0.8 3m blu Gaine pour fil ø0.6-0.8 3m bleu Wire guide hose ø0.6-0.8 3m blue Drahtführungsseele ø0.6-0.8 3m blue Vaina guia hilo ø0.6-0.8 3m blue	722437
5	Guaina guidafilo ø1.0-1.2 3m rossa Gaine pour fil ø1.0-1.2 3m rouge Wire guide hose ø1.0-1.2 3m red Drahtführungsseele ø1.0-1.2 3m rot Vaina guia hilo ø1.0-1.2 3m roja	722689
5	Guaina guidafilo ø1.0-1.2 4m al Gaine pour fil ø 1.0-1.2 4m al Wire guide hose ø 1.0-1.2 4m al Drahtführungsseele ø 1.0-1.2 4m al Vaina guia hilo ø 1.0-1.2 4m al	742984

REF.	ELENCO PEZZI RICAMBIO TORCIA LISTE PIECES DETACHEES TORCHE SPARE PARTS LIST TORCH ERSATZTEILLISTE SCLAUCHPAKET PIEZAS DE REPUESTO ANTORCHA	CODICE CODE KODE
6	Ugello cilindrico mt25 Buse cylindrique mt25 Cylindrical nozzle mt25 Zylindrische düse mt25 Inyector cilindrico mt25	722684
6	Ugello conico mt25 Buse conique mt25 Conical nozzle mt25 Konische düse mt25 Inyector conico mt25	722685
6	Ugello testa fine mt25 Buse a tete fine mt25 Thin headed nozzle mt25 Verengte düse mt25 Inyector cabeza fina mt25	722686
6	Ugello per puntatura d. 18 Mm Buse pointage d. 18 Mm Spot welding nozzle d. 18 Mm Punktschweissgasdüse d. 18 Mm Inyector por puntos d. 18 Mm	722687
7	Nipples ferma guaina Nipples serre gaine Wire guide locking nipples Drahtseeleklemmnipples Nipples de bloqueo vaina	722598
8	Anello or Bague or Or ring Or ring Anillo or	722601
8	Anello or Anneau or Or ring Or ring Anillo or	722606
9	Lancia mt25 Lance mt25 Swan neck mt25 Brennerhals mt25 Encorvado mt25	722696
10	Tubetto ferma guaina Tuyau serre gaine Wire guide locking tube Drahtseeleklemmrohr Tubito de bloqueo vaina	722600
11	Diffusore gas mt25 Diffuseur gaz mt25 Gas diffuser mt25 Gasdiffusor mt25 Diffusor gas mt25	722688
12	Isolante corpo torcia Isolant corps de torche Torch connection insulation Brenneranschlussblock isolierteil Aislador cuerpo de antorcha	722693
13	Molla per ugello mt25 Ressort pour buse mt25 Nozzle spring mt25 Düsenfeder mt25 Muelle por inyector mt25	722690

REF.	ELENCO PEZZI RICAMBIO TORCIA LISTE PIECES DETACHEES TORCHE SPARE PARTS LIST TORCH ERSATZTEILLISTE SCLAUCHPAKET PIEZAS DE REPUESTO ANTORCHA	CODICE CODE KODE

ELENCO PEZZI DI RICAMBIO
LISTE PIECES DETACHEES
SPARE PARTS LIST
ERSATZTEILLISTE
PIEZAS DE REPUESTO

TECHNOMIG 240 WAVE

Esploso macchina, Dessin appareil, Machine drawing, Explosions Zeichnung des Geräts, Diseño seccionado maquina.

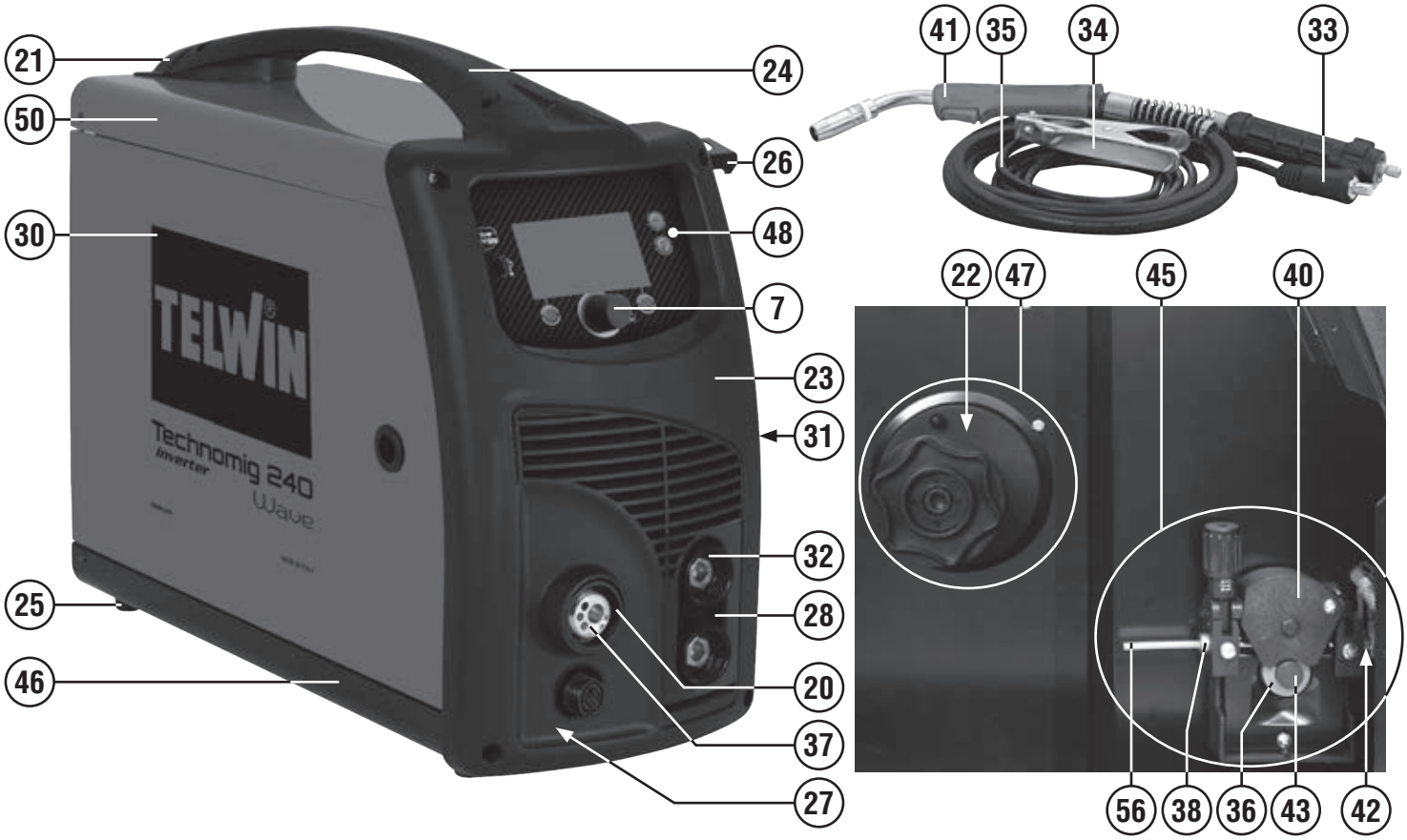

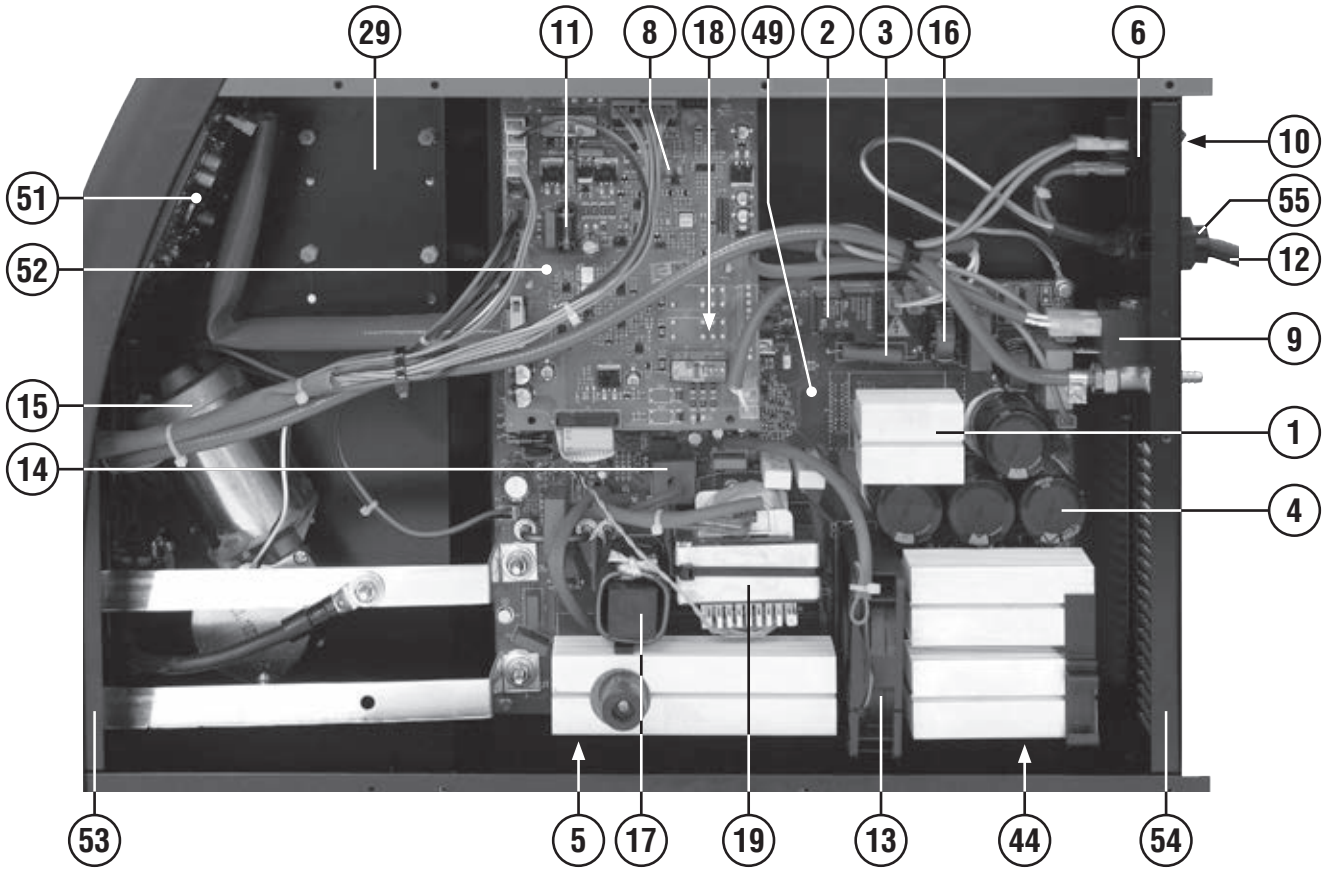

REF.	ELENCO PEZZI DI RICAMBIO PIECES DETACHEES SPARE PARTS LIST ERSATZTEILLISTE PIEZAS DE REPUESTO	CODICE CODE KODE
1	Ponte monofase Pont monophase Single phase bridge Einfasige brücke Puente monofasico	111017
2	Rele Relais Relais Relais Conectador	111211
3	Res. Filo 47r 8w 5% Res. Fil 47r 8w 5% Res. Wire 47r 8w 5% Res. Draht 47r 8w 5% Res. Hilo 47r 8w 5%	112048
4	Condensatore Condensateur Capacitor Kondensator Condensador	112694
5	Diodo Diode Diode Diode Diodo	116839
6	Interruttore Interrupteur Switch Schalter Interruptor	121248
7	Kit manopola encoder d.29 Kit poignee encoder d.29 Encoder knob kit d.29 Encodergriff kit d.29 Kit manija encoder d.29	982070
8	Fusibile Fusible Fuse Sicherung Fusible	121456
9	Elettrovalvola Electrovanne Electrovalve Elektroventil Electrovalvula	121800
10	Copri interruttore Couvre interrupteur Switch cover Schalterdeckel Cubre interruptor	122353
11	Fusibile Fusible Fuse Sicherung Fusible	122434
12	Cavo alimentazione Cable de reseau Mains cable Netzkabel Cable de alimentation	132157
13	Ventilatore Ventilateur Fan Ventilator Ventilador	152006
14	Ta Ta Ta Ta Ta	152296
15	Motoriduttore 24vdc + sensore hall Motoriducteur 24vdc + sonde hall Motoreducer 24vdc + hall sonde Motoriduktor 24vdc + hall probe Motoriductor 24vdc + sonda hall	153053
16	Induttanza filtro Inductance filter Filter inductance Filter drossel Induccion filtro	164741
17	Induttanza uscita Inductance output Output inductance Output drossel Induccion output	169808
18	Trasformatore flyback ausiliario Transformateur flyback auxiliaire Flyback auxiliary transformer Flyback hilfstransformator Transformador flyback auxiliar	169862
19	Trasformatore potenza Transformateur puissance Power transformer Leistungstransformator Transformador de potencia	169924
20	Protezione attacco torcia Support isolant torche Torch connection protection Brennersisolierlager Sosten isolator antorcha	312105
21	Copertura manico Capot poignee Handlecover Handgriffsdeckel Copertura manija	321142
22	Distanziale per aspo Entretoise pour support bobine Reel spacer Distanzstueck Espàciador por aspa	321210
23	Frontale Partie frontal Front panel Gerätefront Frontal	321367
24	Manico Poignee Handle Handgriff Manija	322883
25	Piedino Embout Foot Fuss Pie	323001
26	Gancio appendi torcia Accrocheur torche Torch hook Haken fuer brenner Gancho fijacion antorcha	645704
27	Supporto presa Support prise Socket holder Steckdose halterung Soporte enchufe	645714
28	Supporto presa atlas Support prise atlas Socket holder atlas Steckdose halterung atlas Soporte enchufe atlas	645728
29	Diaframma Diaphragme Diaphragm Diaphragma Diafragma	645921
30	Sportello Guichet Door Tuer Portezuela	656255
31	Fianco Partie laterale Side panel Seitenblech Flanco	656256
32	Presa atlas 50mmq Prise atlas 50mmq Atlas socket 50mmq Atlas steckdose 50mmq Enchufe atlas 50mmq	712036
33	Spina atlas 50mmq Fiche atlas 50mmq Atlas plug 50mmq Atlas stecker 50mmq Enchufe atlas 50mmq	712040
34	Toledo 300 pinza di massa 300a Toledo 300 borne de masse 300a Toledo 300 work clamp 300a Toledo 300 masseklemme 300a Toledo 300 borne de masa 300a	712231
35	Cavo 25mmq 3m-pinza massa-atlas 50mmq Cable 25mmq 3m-pince masse-atlas 50mmq Cable 25mmq 3m-work clamp-atlas 50mmq Kabel 25mmq 3m-massezange-atlas 50mmq Cable 25mmq 3m-pinca masa-atlas 50mmq	713192
36	Rullino traino 2r 0,6fe-0,8fe “f” Galet 2r 0,6fe-0,8fe “f” Feed roll 2r 0,6fe-0,8fe “f” Vorschubrolle 2r 0,6fe-0,8fe “f” Roldana 2r 0,6fe-0,8fe “f”	722112
37	Attacco torcia Attelage torche Torch connection Brenneranschluss Enganche soplete	723229
38	Entrata guidafilo Entree guide fil Wire guide inlet Drahtfuehrungsseeleeingang Entrata vaina guiadera alambre	742064
39	Rullino traino 2r 0,8al-1,0al “f” Galet 2r 0,8al-1,0al “f” Feed roll 2r 0,8al-1,0al “f” Vorschubrolle 2r 0,8al-1,0al “f” Roldana 2r 0,8al-1,0al “f”	742090
40	Ancora controrullino Ancre contre-galet Anchor for pressure roller Anker für gegenrolle Ancora para contra roldana	742096
41	Mt25 torcia mig 3m Mt25 torche mig 3m Mt25 mig torch 3m Mt25 mig brenner 3m Mt25 antorcha mig 3m	742183
42	Tubo capillare ø 2x5 Tuyau capillaire ø 2x5 Wire conduit ø 2x5 Kapillarrohr ø 2x5 Tubo capilar ø 2x5	742365
43	Vite bloccarullino Vis ferme galet Rollerfixing screw Rollerhalterschraube Tornillo bloque roldana	742397
44	Kit igbt + diodo Kit igbt + diode Kit igbt + diode Kit igbt + diode Kit igbt + diodo	981293
45	Kit traino due rulli Kit devidoir 2 roleaux Kit 2 rolls wirefeeder Kit 2 raeder drahtvorschub Kit alimentador de hilo 2 rollos	981496
46	Kit fondo Kit chassis Bottom kit Bodenteil kit Kit fondo	981498
47	Kit aspo 15kg Kit support bobine 15kg Reel kit 15kg Wickler kit 15kg Kit aspa 15kg	981703
48	Kit supporto display Kit support display Display holder kit Display halterung kit Kit soporte display	981810
49	Kit scheda potenza Kit carte puissance Power board kit Leistungskartekit Kit tarjeta potencia	981925
50	Kit mantello Kit capot Cover kit Deckel kit Kit panel de cobertura	981996
51	Kit scheda tft Kit platine tft Tft card kit Tft karte kit Kit tarjeta tft	982043
52	Kit scheda controllo Kit carte controle Control board kit Steuerungskarte kit Kit tarjeta control	982044
53	Kit frontale Kit partie frontal Front panel kit Gerätefront kit Kit frontal	982189
54	Kit retro Kit partie arriere Back panel kit Rückseite kit Kit trasera	982190
55	Kit pressacavo + ghiera Kit presse cable + embout Kit cable bushing + ring nut Kit kabelhalter + nutmutter Kit prensa cable + virola	990046
56	Kit guaina entrata motore Kit gaine entree moteur Gas hose kit Drahtfuehrungsseelekit Kit vaina guiadera alambre	990097

Schema elettrico, Schéma électrique, Diagram, Schaltplan, Esquema de conexiones.

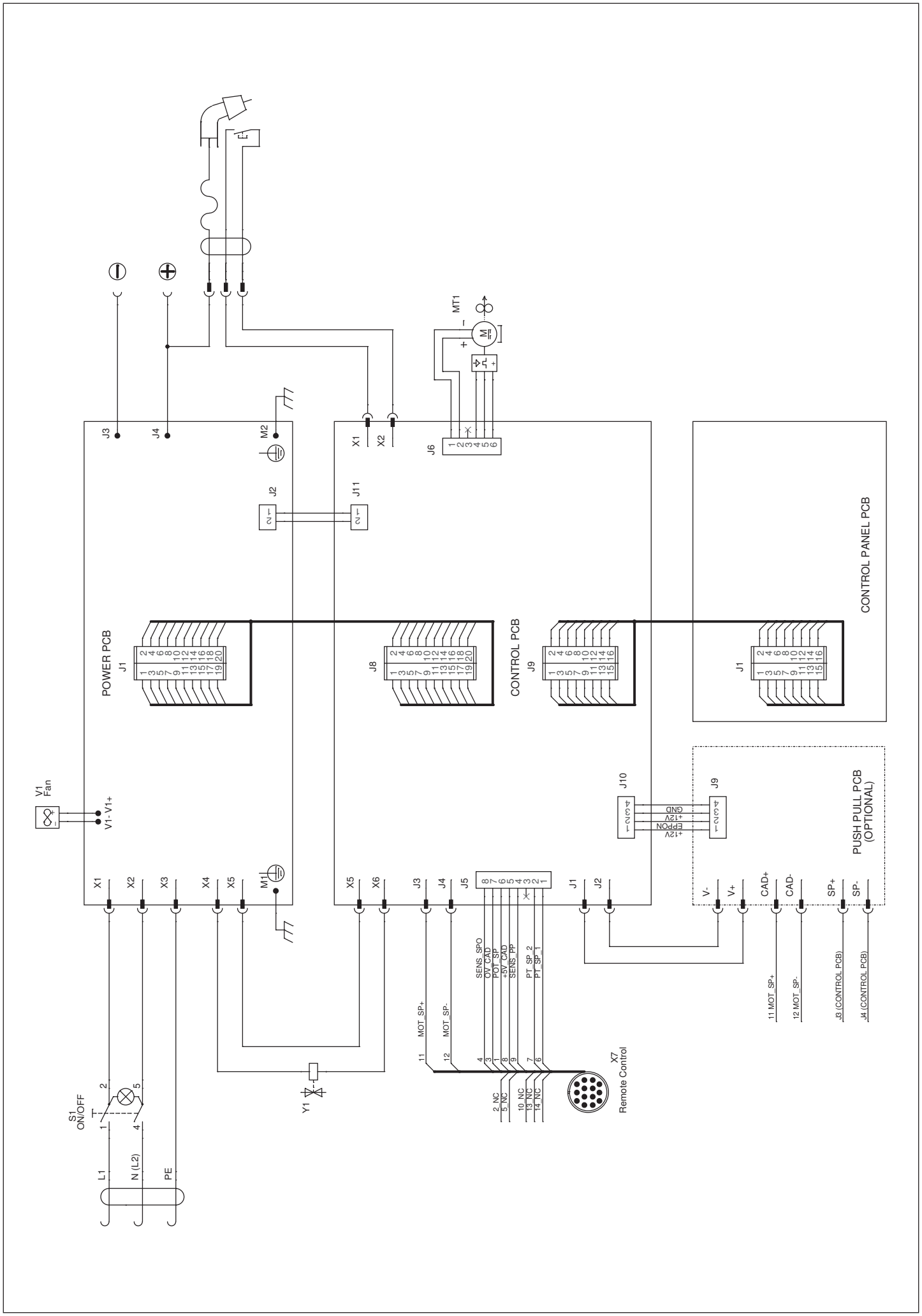

Esploso torcia, Dessin torche, Torch drawing, Schlauchpaket - Explosionszeichnung, Diseño seccionado antorcha.

742183 3m
742184 4m
742185 5m

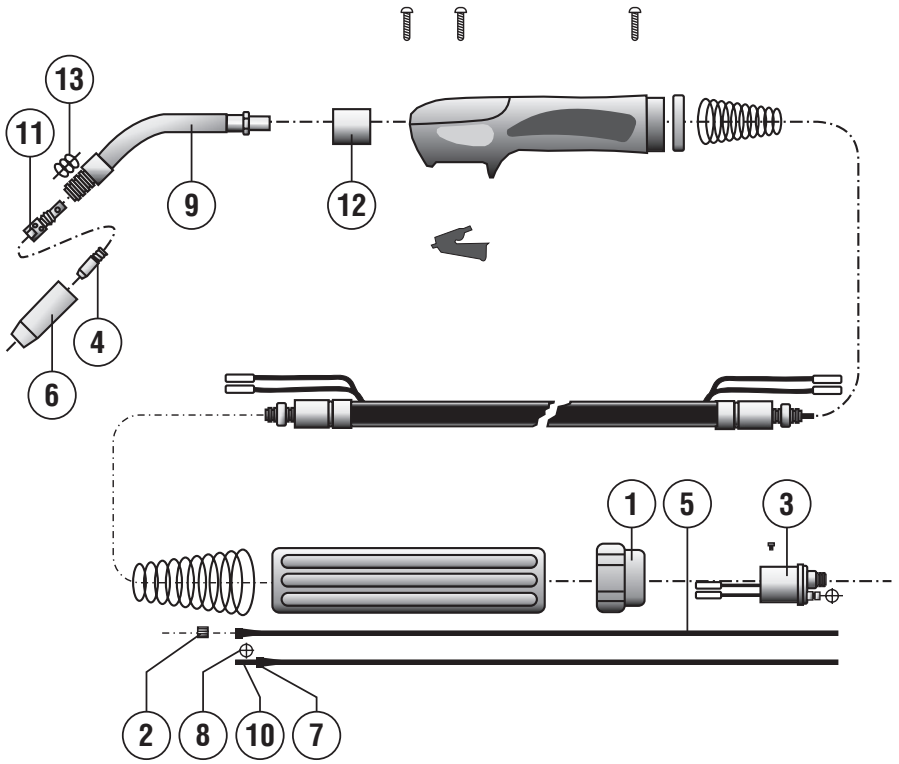

REF.	ELENCO PEZZI RICAMBIO TORCIA LISTE PIECES DETACHEES TORCHE SPARE PARTS LIST TORCH ERSATZTEILLISTE SCLAUCHPAKET PIEZAS DE REPUESTO ANTORCHA	CODICE CODE KODE
1	Ghiera fissaggio Embout fixage Ring nut Nutmutter Virola por fiyacion	722007
2	Dado fissaggio guaina Ecrou fixage gaine Liner nut Befestigungsmutter Dado por fiyacion vaina	722013
3	Corpo torcia Corp de torche Torch assy Brennerskörper Enganche antorcha	722441
4	Tubetto di contatto d. 1,2 Mm fe Tube contact d. 1,2 Mm fe Contact tip d. 1,2 Mm fe Kontaktdüse d. 1,2 Mm fe Tubito de contacto d. 1,2 Mm fe	722682
4	Tubetto di contatto d. 1 Mm fe m6 l=28mm Tube contact d. 1 Mm fe m6 l=28mm Contact tip d. 1 Mm fe m6 l=28mm Kontaktdüse d. 1 Mm fe m6 l=28mm Tubito de contacto d. 1 Mm fe m6 l=28mm	722681
4	Tubetto di contatto d. 0,8 Mm m6 Tube contact d. 0,8 Mm m6 Contact tip d. 0,8 Mm m6 Kontaktdüse d. 0,8 Mm m6 Tubito de contacto d. 0,8 Mm m6	722680
4	Tubetto di contatto d. 1,2 Mm al/flux m6 Tube contact d. 1,2 Mm al/flux m6 Contact tip d. 1,2 Mm al/flux m6 Kontaktdüse d. 1,2 Mm al/flux m6 Tubito de contacto d. 1,2 Mm al/flux m6	722553
4	Tubetto di contatto d. 1 Mm al/flux m6 Tube contact d. 1 Mm al/flux m6 Contact tip d. 1 Mm al/flux m6 Kontaktdüse d. 1 Mm al/flux m6 Tubito de contacto d. 1 Mm al/flux m6	722552
4	Tubetto di contatto d. 0,6 Mm fe Tube contact d. 0,6 Mm fe Contact tip d. 0,6 Mm fe Kontaktdüse d. 0,6 Mm fe Tubito de contacto d. 0,6 Mm fe	722415
5	Guaina guidafilo ø0.6-0.8 3m blu Gaine pour fil ø0.6-0.8 3m bleu Wire guide hose ø0.6-0.8 3m blue Drahtführungsseele ø0.6-0.8 3m blue Vaina guia hilo ø0.6-0.8 3m blue	722437
5	Guaina guidafilo ø1.0-1.2 3m rossa Gaine pour fil ø1.0-1.2 3m rouge Wire guide hose ø1.0-1.2 3m red Drahtführungsseele ø1.0-1.2 3m rot Vaina guia hilo ø1.0-1.2 3m roja	722689
5	Guaina guidafilo ø1.0-1.2 4m al Gaine pour fil ø 1.0-1.2 4m al Wire guide hose ø 1.0-1.2 4m al Drahtführungsseele ø 1.0-1.2 4m al Vaina guia hilo ø 1.0-1.2 4m al	742984

REF.	ELENCO PEZZI RICAMBIO TORCIA LISTE PIECES DETACHEES TORCHE SPARE PARTS LIST TORCH ERSATZTEILLISTE SCLAUCHPAKET PIEZAS DE REPUESTO ANTORCHA	CODICE CODE KODE
6	Ugello cilindrico mt25 Buse cylindrique mt25 Cylindrical nozzle mt25 Zylindrische düse mt25 Inyector cilindrico mt25	722684
6	Ugello conico mt25 Buse conique mt25 Conical nozzle mt25 Konische düse mt25 Inyector conico mt25	722685
6	Ugello testa fine mt25 Buse a tete fine mt25 Thin headed nozzle mt25 Verengte düse mt25 Inyector cabeza fina mt25	722686
6	Ugello per puntatura d. 18 Mm Buse pointage d. 18 Mm Spot welding nozzle d. 18 Mm Punktschweissgasdüse d. 18 Mm Inyector por puntos d. 18 Mm	722687
7	Nipples ferma guaina Nipples serre gaine Wire guide locking nipples Drahtseeleklemmnipples Nipples de bloqueo vaina	722598
8	Anello or Bague or Or ring Or ring Anillo or	722601
8	Anello or Anneau or Or ring Or ring Anillo or	722606
9	Lancia mt25 Lance mt25 Swan neck mt25 Brennerhals mt25 Encorvado mt25	722696
10	Tubetto ferma guaina Tuyau serre gaine Wire guide locking tube Drahtseeleklemmrohr Tubito de bloqueo vaina	722600
11	Diffusore gas mt25 Diffuseur gaz mt25 Gas diffuser mt25 Gasdiffusor mt25 Diffusor gas mt25	722688
12	Isolante corpo torcia Isolant corps de torche Torch connection insulation Brenneranschlussblock isolierteil Aislador cuerpo de antorcha	722693
13	Molla per ugello mt25 Ressort pour buse mt25 Nozzle spring mt25 Düsenfeder mt25 Muelle por inyector mt25	722690

REF.	ELENCO PEZZI RICAMBIO TORCIA LISTE PIECES DETACHEES TORCHE SPARE PARTS LIST TORCH ERSATZTEILLISTE SCLAUCHPAKET PIEZAS DE REPUESTO ANTORCHA	CODICE CODE KODE

ELENCO PEZZI DI RICAMBIO
LISTE PIECES DETACHEES
SPARE PARTS LIST
ERSATZTEILLISTE
PIEZAS DE REPUESTO

TECHNOMIG 223 TREO SYNERGIC

Esploso macchina, Dessin appareil, Machine drawing, Explosions Zeichnung des Geräts, Diseño seccionado maquina.

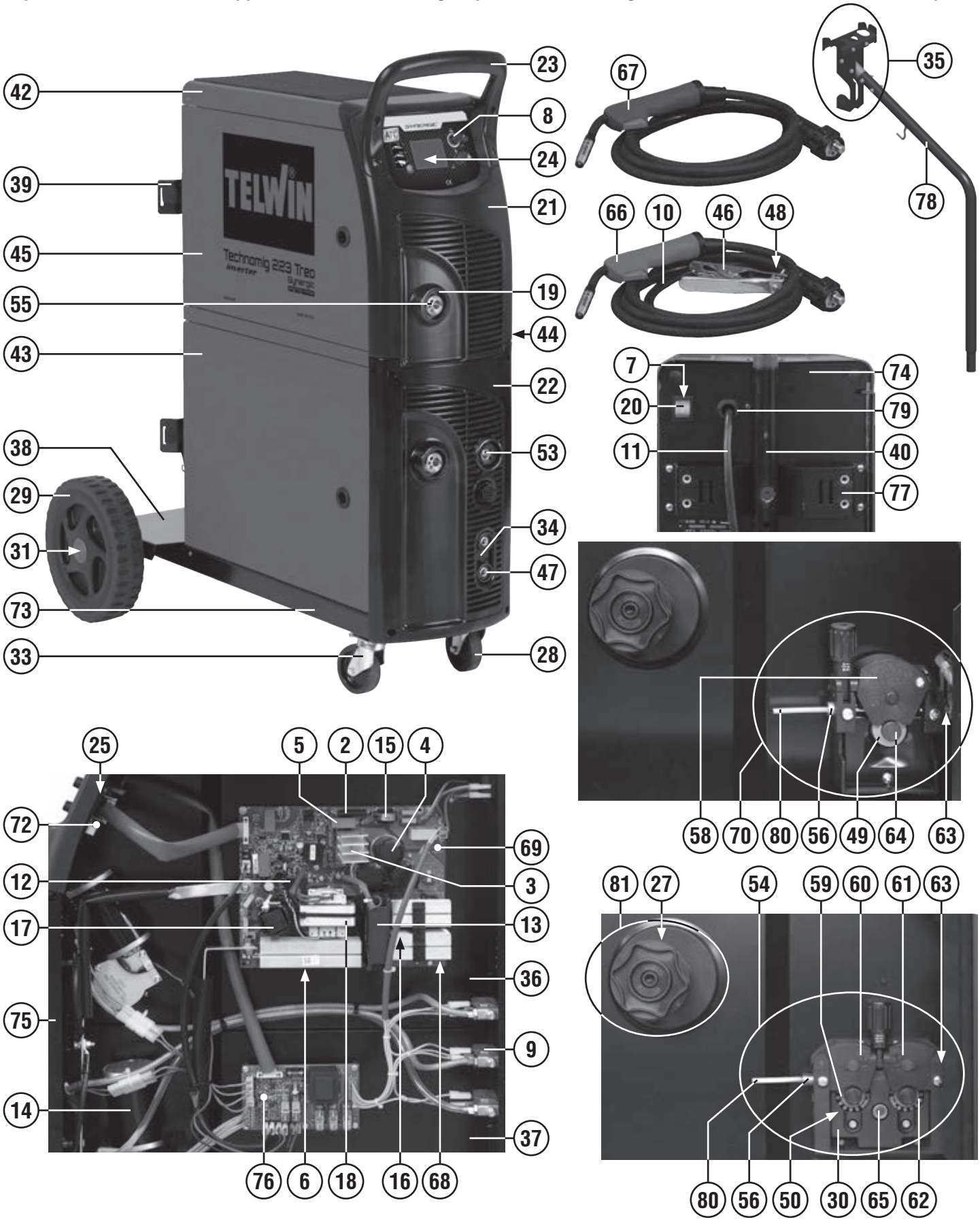

REF.	ELENCO PEZZI DI RICAMBIO PIECES DETACHEES SPARE PARTS LIST ERSATZTEILLISTE PIEZAS DE REPUESTO	CODICE CODE KODE
2	Res. Filo 47r 8w 5% Res. Fil 47r 8w 5% Res. Wire 47r 8w 5% Res. Draht 47r 8w 5% Res. Hilo 47r 8w 5%	112048
3	Raddrizzatore monofase Redresseur monophase Single-phase rectifier Einphasiger gleichrichter Rectificador monofasico	112357
4	Condensatore Condensateur Capacitor Kondensator Condensador	112694
5	Rele' Relais Relais Relais Relais	116320
6	Diodo Diode Diode Diode Diodo	116839
7	Interruttore Interrupteur Switch Schalter Interruptor	121248
8	Manopola encoder d.15 Poignee encoder d.15 Encoder knob d.15 Griff encoder d.15 Manija encoder d.15	121315
9	Elettrovalvola Electrovanne Electrovalve Elektroventil Electrovalvula	121800
10	Cavo 16 mmq 3 m - spina atlas 25 Cable 16 mmq 3 m - fiche atlas 25 Cable 16 mmq 3 m - plug atlas 25 Kabel 16 mmq 3 m - stecker atlas 25 Cable 16 mmq 3 m - enchufe atlas 25	123437
11	Cavo alimentazione Cable de reseau Mains cable Netzkabel Cable de alimentation	132157
12	Trasformatore di corrente Transformateur de courant Current transformer Stromwandler Transformador de corriente	152230
13	Ventilatore Ventilateur Fan Ventilator Ventilador	152269
14	Motore Moteur Motor Motor Motor	153033
15	Induttanza filtro Inductance filter Filter inductance Filter drossel Induccion filtro	164741
16	Trasformatore x flyback Transformateur x flyback Transformer x flyback Transformator x flyback Transformador x flyback	169700
17	Induttanza uscita Inductance output Output inductance Output drossel Induccion output	169808
18	Trasformatore potenza Transformateur de puissance Power trafo Leistungstransformer Transformador de potencia	169822
19	Protezione attacco torcia Support isolant torche Torch connection protection Brennersisolierlager Sosten isolator antorcha	312105
20	Copri interruttore Couvre interrupteur Switch cover Schalterdeckel Cubre interruptor	122353
21	Frontale superiore Partie frontal superieur Upper front panel Obere geraetefront Frontal superior	321137
22	Frontale inferiore Partie frontal inferieur Lower front panel Geraetefront unten Frontal inferior	321138

REF.	ELENCO PEZZI DI RICAMBIO PIECES DETACHEES SPARE PARTS LIST ERSATZTEILLISTE PIEZAS DE REPUESTO	CODICE CODE KODE
23	Assieme manico Set poignee Handle set Handgriff set Set manija	321165
24	Spessore per schermo Blindage Shield Schild Proteccion	321194
25	Supporto scheda Support fiche Card holder Kartehalter Sosten tarjeta	321196
27	Distanziale per aspo Entretoise pour support bobine Reel spacer Distanzstueck Espàciador por aspa	321210
28	Ruota Roue Wheel Rad Rueda	322245
29	Ruota Roue Wheel Rad Rueda	321389
30	Protezione Protecion Cover Deckel Proteccion	322814
31	Asse per ruote Axes pour roue Wheels axle Raederachse Eje por rueda	422940
33	Supporto girevole + freno Support tournant + frein Swivel support + brake Drehbarerhalter + bremse Sosten giratorio + freno	484688
34	Supporto presa atlas Support prise atlas Socket holder atlas Steckdose halterung atlas Soporte enchufe atlas	645623
35	Kit isolante Kit isolant Insulator kit Isolationskit Kit aislante	982077
36	Diaframma Diaphragme Diaphragm Diaphragma Diafragma	645667
37	Diaframma inferiore Diaphragme inferieur Lower diaphragm Unten diaphragma Diafragma inferior	645668
38	Supporto bombola Support bouteille Bottle holder Flaschenhalter Sosten bombona	645672
39	Staffa portabombola piccola Etrier porte-bouteille petite Small bottle-holder bracket Kasten fuer kleine flasche Estribo porta bombona pequena	645674
40	Supporto inferiore Suport inferieur Lower holder Unten halterung Soporte inferior	645677
42	Kit mantello Kit capot Cover kit Deckelkit Kit panel de cobertura	981740
43	Sportello inferiore Guichet partie inferieur Lower side door Unten sitetuer Portezuela inferior	651212
44	Fianco Partie laterale Side panel Seitenblech Flanco	656165
45	Sportello Guichet Door Tuer Portezuela	656171
46	Toledo 250 pinza di massa 250a Toledo 250 pince de masse 250a Toledo 250 work clamp 250a Toledo 250 masseklemme 250a Toledo 250 pinza de masa 250a	712030

REF.	ELENCO PEZZI DI RICAMBIO PIECES DETACHEES SPARE PARTS LIST ERSATZTEILLISTE PIEZAS DE REPUESTO	CODICE CODE KODE
47	Presa atlas 25mmq Prise atlas 25mmq Socket atlas 25mmq Steckdose atlas 25mmq Enchufe atlas 25mmq	712035
48	Spina atlas 25mmq Fiche atlas 25mmq Atlas plug 25mmq Atlas stecker 25mmq Enchufe atlas 25mmq	712039
49	Rullino traino 2r 0,6fe-0,8fe “f” Galet 2r 0,6fe-0,8fe “f” Feed roll 2r 0,6fe-0,8fe “f” Vorschubrolle 2r 0,6fe-0,8fe “f” Roldana 2r 0,6fe-0,8fe “f”	722112
50	Rullino traino 4r ø0.6fe-0.8/0.9fe “p-k” Galet 4r ø 0.6fe-0.8/0.9fe “p-k” Feed roll 4r ø 0.6fe-0.8/0.9fe “p-k” Vorschubrolle 4r ø 0.6fe-0.8/0.9fe “p-k” Roldana 4r ø 0.6fe-0.8/0.9fe “p-k”	742576
51	Rullino traino 4r ø 0.8fe-1.0fe “p-k” Galet 4r ø 0.8fe-1.0fe “p-k” Feed roll 4r ø 0.8fe-1.0fe “p-k” Vorschubrolle 4r ø 0.8fe-1.0fe “p-k” Roldana 4r ø 0.8fe-1.0fe “p-k”	722227
52	Rullino traino 4r ø 1.2fe-1.6fe “p-k” Galet 4r ø 1.2fe-1.6fe “p-k” Feed roll 4r ø 1.2fe-1.6fe “p-k” Vorschubrolle 4r ø 1.2fe-1.6fe “p-k” Roldana 4r ø 1.2fe-1.6fe “p-k”	722241
53	Attacco torcia Attelage torche Torch connection Schlauchpaketanschluss Enganche antorcha	723051
54	Traino 4 rulli Devidoir 4 rouleaux 4 Roll wirefeeder 4 Räder drahtvorschub Alimendator de hilo 4 rodillos	981928
55	Attacco torcia Attelage torche Torch connection Brenneranschluss Enganche soplete	723229
56	Entrata guidafilo Entree guide fil Wire guide inlet Drahtfuehrungsseeleeingang Entrata vaina guiadera alambre	742064
57	Rullino traino 2r 0,8al-1,0al “f” Galet 2r 0,8al-1,0al “f” Feed roll 2r 0,8al-1,0al “f” Vorschubrolle 2r 0,8al-1,0al “f” Roldana 2r 0,8al-1,0al “f”	742090
58	Ancora controrullino Ancre contre-galet Anchor for pressure roller Anker für gegenrolle Ancora para contra roldana	742096
59	Adattatore Adapteur Adapter Zahnrad Adaptador	742166
60	Ancora controrullino sinistra Ancre contre-galet gauche Left anchor for pressure roller Linker anker für gegenrolle Ancora izquierda para contra roldana	981929
61	Ancora controrullino destra Ancre contre-galet droit Right anchor for pressure roller Rechter anker für gegenrolle Ancora derecha para contra roldana	981930
62	Ingranaggio motore Engrenage motor Motor drive gear Motorszahnrad Engranaje motor	742348
63	Tubo capillare ø 2x5 Tuyau capillaire ø 2x5 Wire conduit ø 2x5 Kapillarrohr ø 2x5 Tubo capilar ø 2x5	742365
64	Vite bloccarullino Vis ferme galet Rollerfixing screw Rollerhalterschraube Tornillo bloque roldana	742397
65	Ingranaggio Engrenages Gears Zahnrad Engranaje	742590
66	Mt15 torcia mig 3m (red) Mt15 torche mig 3m (red) Mt15 mig torch 3m (red) Mt15 mig brenner 3m (red) Mt15 antorcha mig 3m (red)	742180
67	Mt15 torcia mig 3m (blue) Mt15 torche mig 3m (blue) Mt15 mig torch 3m (blue) Mt15 mig brenner 3m (blue) Mt15 antorcha mig 3m (blue)	742944

REF.	ELENCO PEZZI DI RICAMBIO PIECES DETACHEES SPARE PARTS LIST ERSATZTEILLISTE PIEZAS DE REPUESTO	CODICE CODE KODE
68	Kit igbt + diodo Kit igbt + diode Igbt + diode kit Igbt + diode kit Kit igbt + diodo	980990
69	Kit scheda completa Kit fiche complete Complete pcb kit Komplette karte kit Kit tarjeta completa	981494
70	Kit traino due rulli Kit devidoir 2 roleaux Kit 2 rolls wirefeeder Kit 2 raeder drahtvorschub Kit alimentador de hilo 2 rollos	981496
72	Kit scheda pannello Kit platine frontal Kit front panel card Kit geraetefrontskarte Kit tarjeta frontal	981641
73	Kit fondo Kit chassis Bottom kit Bodenteil kit Kit fondo	981642
74	Kit retro Kit partie arriere Back panel kit Rueckseite kit Kit trasera	981643
75	Kit frontale Kit partie frontal Front panel kit Geraetefront kit Kit frontal	981644

REF.	ELENCO PEZZI DI RICAMBIO PIECES DETACHEES SPARE PARTS LIST ERSATZTEILLISTE PIEZAS DE REPUESTO	CODICE CODE KODE
76	Kit scheda ausiliario Kit platine auxiliare Auxiliary board kit Hilfskartekit Kit tarjeta ausiliaria	981645
77	Kit staffa supporto Kit bride support Holding bracket kit Halterungsbügel kit Kit estribo de sosten	981646
78	Kit supporto superiore Kit support superieur Upper holder kit Oben halterung kit Kit soporte superior	981647
79	Kit pressacavo + ghiera Kit presse cable + embout Kit cable bushing + ring nut Kit kabelhalter + nutmutter Kit prensa cable + virola	990046
80	Kit guaina entrata motore Kit gaine entree moteur Gas hose kit Drahtfuehrungsseelekit Kit vaina guiadera alambre	990097
81	Kit aspo 15kg Kit support bobine 15kg Reel kit 15kg Wickler kit 15kg Kit aspa 15kg	981703

REF.	ELENCO PEZZI DI RICAMBIO PIECES DETACHEES SPARE PARTS LIST ERSATZTEILLISTE PIEZAS DE REPUESTO	CODICE CODE KODE

Schema elettrico, Schéma électrique, Diagram, Schaltplan, Esquema de conexiones.

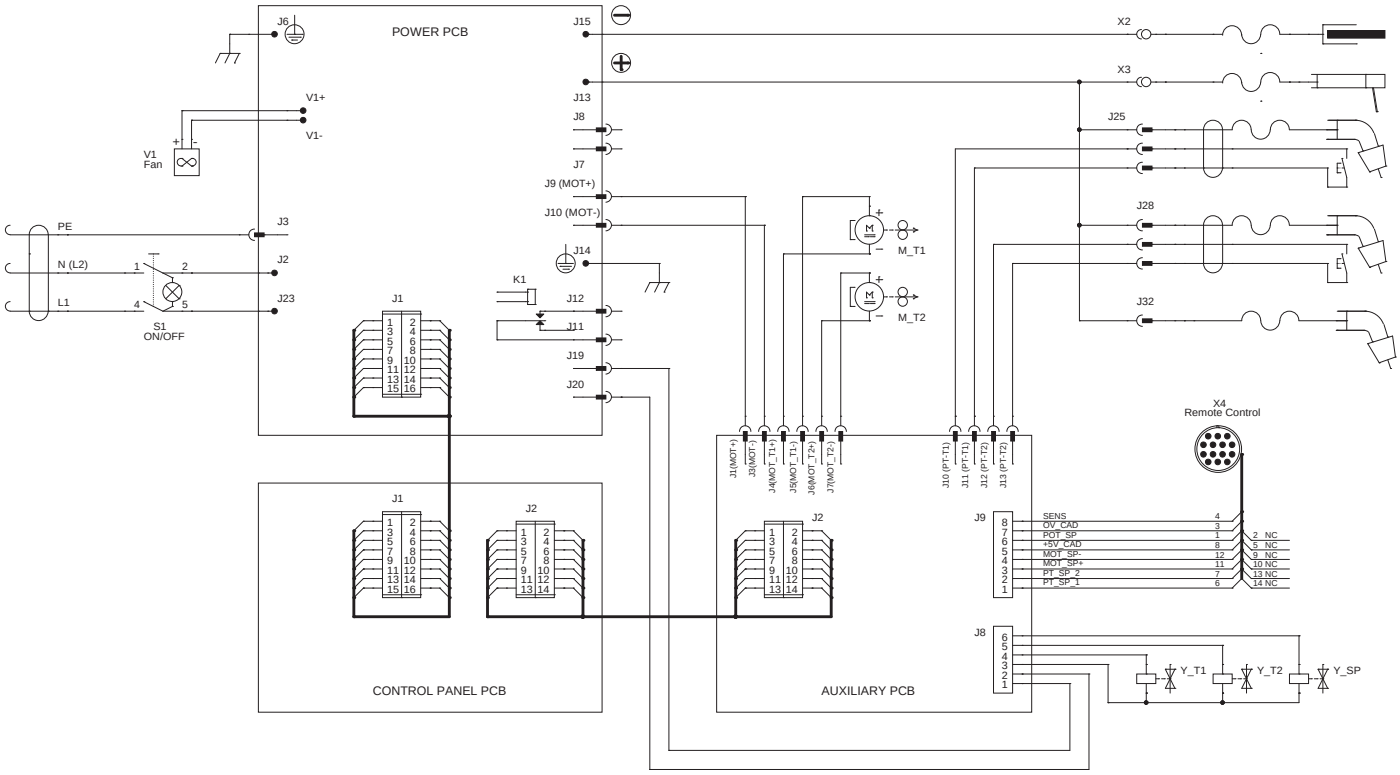

Esploso torcia, Dessin torche, Torch drawing, Schlauchpaket - Explosionszeichnung, Diseño seccionado antorcha.

742650 3m
742660 3m

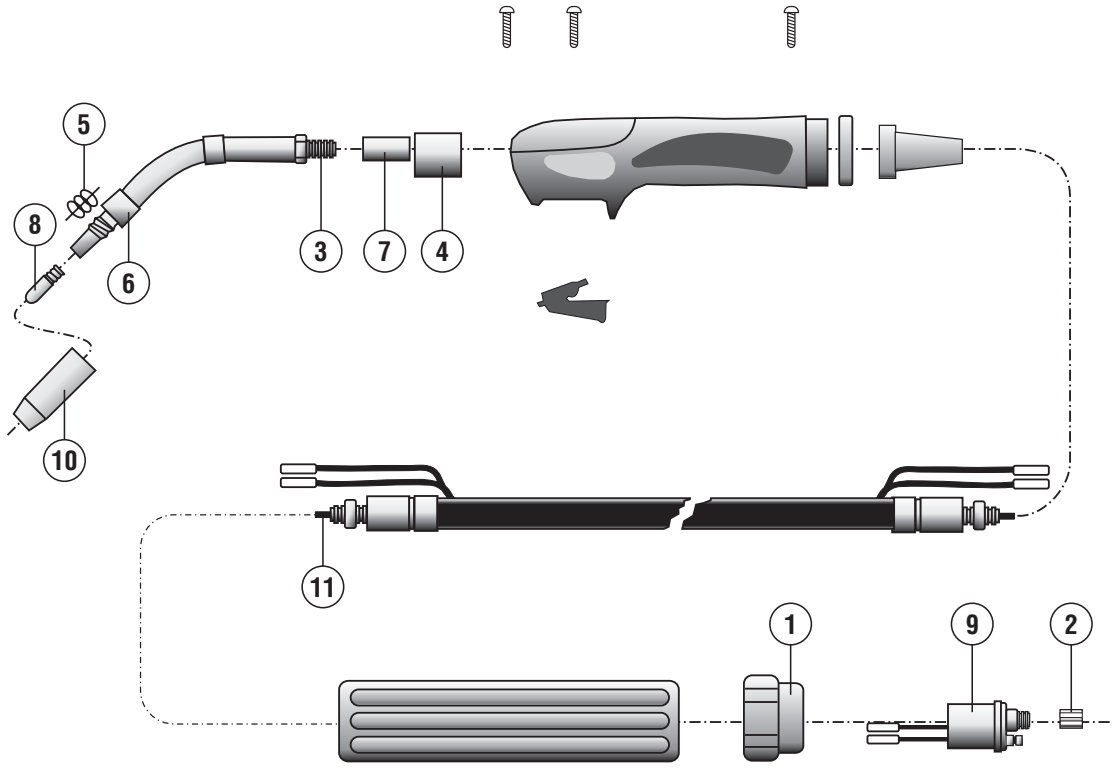

REF.	ELENCO PEZZI RICAMBIO TORCIA LISTE PIECES DETACHEES TORCHE SPARE PARTS LIST TORCH ERSATZTEILLISTE SCLAUCHPAKET PIEZAS DE REPUESTO ANTORCHA	CODICE CODE KODE
1	Ghiera fissaggio Embout fixage Ring nut Nutmutter Virola por fiyacion	722007
2	Dado fissaggio guaina Ecrou fixage gaine Liner nut Befestigungsmutter Dado por fiyacion vaina	722013
3	Lancia mt15 Lance mt15 Swan neck mt15 Brennerhals mt15 Encorvado mt15	722305
4	Isolante corpo torcia Isolant corps de torche Torch connection insulation Brenneranschlussblock isolierteil Aislador cuerpo de antorcha	722693
5	Molla per ugello tw160–180 mt15,spoolgun Ressort p. Buse tw160–180,mt15,spoolgun Nozzle spring tw 160–180, mt15, spoolgun Düsenfeder tw 160–180, mt15, spoolgun Muelle inyector tw160–180,mt15,spoolgun	722319
6	Isolante diffusore Isolant pour diffuseur Diffuser insulation Isolierbuchse Aislador diffusor	722326
7	Corpo torcia Corps de torche Torch connection Brenneranschlussblock Cuerpo de antorcha	722325
8	Tubetto di contatto d. 0,6 Mm fe Tube contact d. 0,6 Mm fe Contact tip d. 0,6 Mm fe Kontaktdüse d. 0,6 Mm fe Tubito de contacto d. 0,6 Mm fe	722415
8	Tubetto di contatto d. 0,8 Mm fe m6 Tube contact d. 0,8 Mm fe m6 Contact tip d. 0,8 Mm fe m6 Kontaktdüse d. 0,8 Mm fe m6 Tubito de contacto d. 0,8 Mm fe m6	722416
9	Corpo torcia Corp de torche Torch assy Brennerskörper Enganche antorcha	722441
10	Ugello cilindrico tw160–180,mt15,sp.Gun Bec conique tw160–180,mt15,sp.Gun Cylindrical nozzle tw160–180,mt15,sp.Gun Zylindrische düse tw160–180,mt15,sp.Gun Inyect. Cilindrico tw160–180,mt15,sp.Gun	722149
10	Ugello conico tw 160–180, mt15,spoolgun Buse conique tw 160–180, mt15,spoolgun Conical nozzle tw 160–180, mt15,spoolgun Gasdüse konisch tw 160–180,mt15,spoolgun Inyector conico tw 160–180,mt15,spoolgun	722423

REF.	ELENCO PEZZI RICAMBIO TORCIA LISTE PIECES DETACHEES TORCHE SPARE PARTS LIST TORCH ERSATZTEILLISTE SCLAUCHPAKET PIEZAS DE REPUESTO ANTORCHA	CODICE CODE KODE
11	Guaina guidafilo ø0.6-0.8 3m blu Gaine pour fil ø0.6-0.8 3m bleu Wire guide hose ø0.6-0.8 3m blue Drahtführungsseele ø0.6-0.8 3m blue Vaina guia hilo ø0.6-0.8 3m blue	722437
11	Guaina guidafilo ø1.0-1.2 3m rossa Gaine pour fil ø1.0-1.2 3m rouge Wire guide hose ø1.0-1.2 3m red Drahtführungsseele ø1.0-1.2 3m rot Vaina guia hilo ø1.0-1.2 3m roja	722689

REF.	ELENCO PEZZI RICAMBIO TORCIA LISTE PIECES DETACHEES TORCHE SPARE PARTS LIST TORCH ERSATZTEILLISTE SCLAUCHPAKET PIEZAS DE REPUESTO ANTORCHA	CODICE CODE KODE

ELENCO PEZZI DI RICAMBIO
LISTE PIECES DETACHEES
SPARE PARTS LIST
ERSATZTEILLISTE
PIEZAS DE REPUESTO

SPOOL GUN

Esploso macchina, Dessin appareil, Machine drawing, Explosions Zeichnung des Geräts, Diseño seccionado maquina.

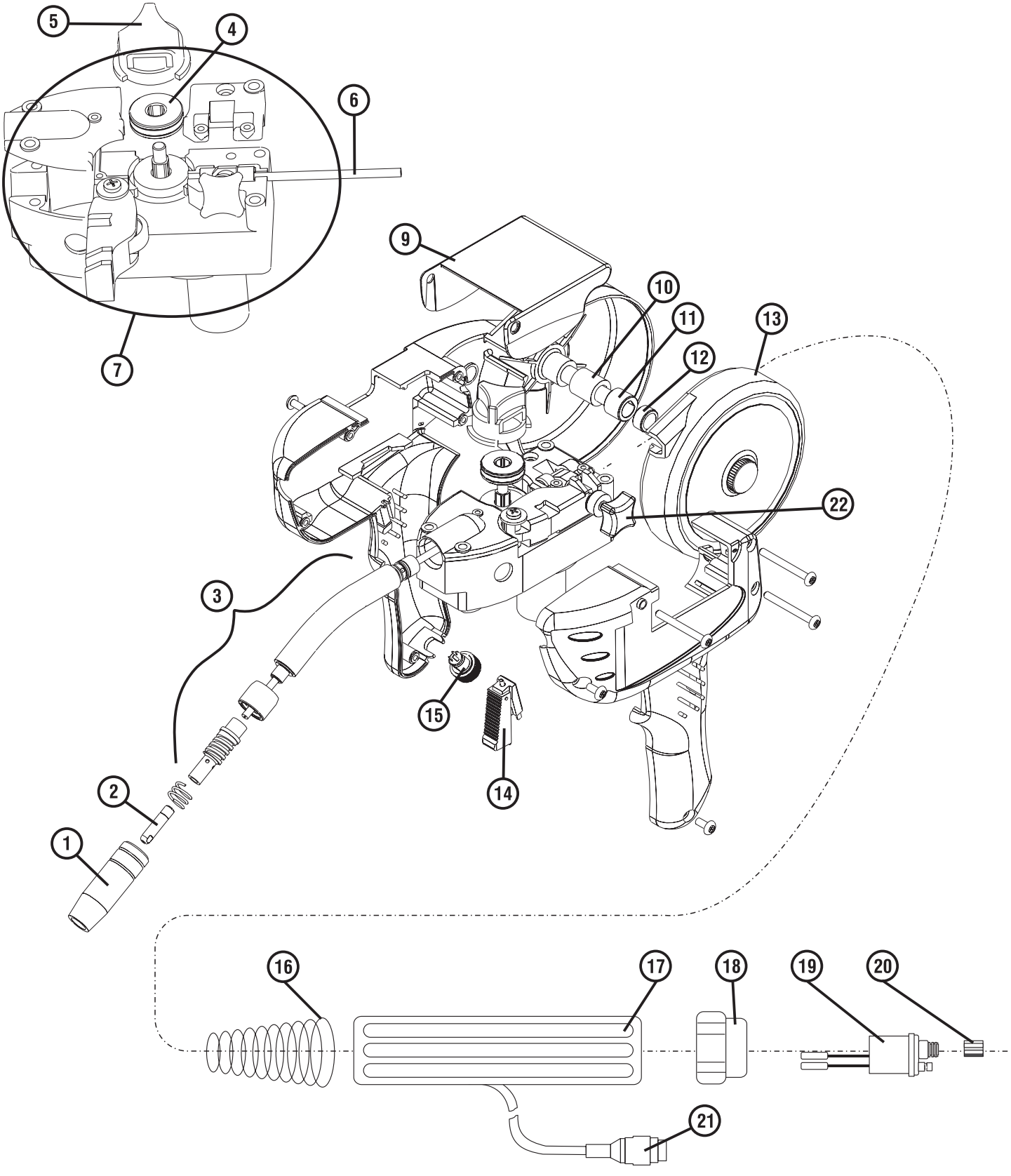

REF.	ELENCO PEZZI DI RICAMBIO PIECES DETACHEES SPARE PARTS LIST ERSATZTEILLISTE PIEZAS DE REPUESTO	CODICE CODE KODE
1	Ugello conico tw 160–180, mt15,spoolgun Buse conique tw 160–180, mt15,spoolgun Conical nozzle tw 160–180, mt15,spoolgun Gasdüse konisch tw 160–180,mt15,spoolgun Inyector conico tw 160–180,mt15,spoolgun	722423
2	Tubetto di contatto d. 1 Mm fe m6 l=25mm Tube contact d. 1 Mm fe m6 l=25mm Contact tip d. 1 Mm fe m6 l=25mm Kontaktdüse d. 1 Mm fe m6 l=25mm Tubito de contacto d. 1 Mm fe m6 l=25mm	722705
2	Tubetto di contatto d. 0,8 Mm al/flux Tube contact d. 0,8 Mm al/flux Contact tip d. 0,8 Mm al/flux Kontaktdüse d. 0,8 Mm al/flux Tubito de contacto d. 0,8 Mm al/flux	722556
2	Tubetto di contatto d. 1 Mm al/flux m6 Tube contact d. 1 Mm al/flux m6 Contact tip d. 1 Mm al/flux m6 Kontaktdüse d. 1 Mm al/flux m6 Tubito de contacto d. 1 Mm al/flux m6	722552
2	Tubetto di contatto d. 0,8 Mm fe m6 Tube contact d. 0,8 Mm fe m6 Contact tip d. 0,8 Mm fe m6 Kontaktdüse d. 0,8 Mm fe m6 Tubito de contacto d. 0,8 Mm fe m6	722416
2	Tubetto di contatto d. 0,6 Mm fe Tube contact d. 0,6 Mm fe Contact tip d. 0,6 Mm fe Kontaktdüse d. 0,6 Mm fe Tubito de contacto d. 0,6 Mm fe	722415
3	Kit lancia spool gun m6 Kit lance spool gun m6 Spool gun m6 lance kit Kit spool gun m6 Kit lancia spool gun m6	990662
4	Rullino spool m6 0,6fe-0,8fe Galet spool m6 0,6fe-0,8fe Feed roll spool m6 0,6fe-0,8fe Vorschubrolle spool m6 0,6fe-0,8fe Roldana spool m6 0,6fe-0,8fe	742191
4	Rullino spool m6 0,8al-1,0al Galet spool m6 0,8al-1,0al Feed roll spool m6 0,8al-1,0al Vorschubrolle spool m6 0,8al-1,0al Roldana spool m6 0,8al-1,0al	742193
5	Coprirullino spool gun Couvre galet spool gun Spool gun roll cover Rolledeckel spool gun Cubre roldana spool gun	322551
6	Kit guaina entrata motore Kit gaine entree moteur Gas hose kit Drahtfuehrungsseelekit Kit vaina guiadera alambre	990097
7	Motore trainafilo Moteur devidoir Wire feeder motor Drahtvorschubsmotor Motor alimentador de hilo	153014
9	Protezione trainafilo spool gun Protection devidoir spool gun Spool gun wire feeder protection Drahtvorschubsdeckel spool gun Proteccion arrastre hilo spool gun	322552
10	Frizione spool gun Embrayage spool gun Clutch spool gun Kupplung spool gun Friccion spool gun	742195
11	Boccola Douille Bush Buchse Casquillo	322553
12	Ghiera fissaggio frizione Embout fixage embrayage Clutch ring nut Kupplungsnutmutter Virola por fiyacion friccion	742196
13	Coperchio Capot Cover Deckel Panel de cobertura	322554
14	Pulsante Poussoir Pushbutton Druckknopf Pulsador	722677
15	Potenziometro Potentiometre Potentiometer Potentiometer Potenciometro	113828
16	Molla torcia Ressort torche Torch spring Brennerfeder Muelle antorcha	742174
17	Attacco spool gun Attelage spool gun Spool gun connection Spool gun anschluss Enganche spool gun	742197
18	Ghiera fissaggio Embout fixage Ring nut Nutmutter Virola por fiyacion	722007
19	Corpo torcia Corp de torche Torch assy Brennerskörper Enganche antorcha	722441
20	Dado fissaggio guaina Ecrou fixage gaine Liner nut Befestigungsmutter Dado por fiyacion vaina	722013
21	Kit connettore 14 contatti Kit connecteur 14 contacts 14 Contacts connector kit Kit 14 kontakte verbinder Kit conectador 14 contactos	990028
22	Volantino per traino Volant pour devidoir Wire feed knob Vorschubhandrad Volant por arrastre	312350

ELENCO PEZZI DI RICAMBIO
LISTE PIECES DETACHEES
SPARE PARTS LIST
ERSATZTEILLISTE
PIEZAS DE REPUESTO

TECHNOMIG 243 WAVE

Esploso macchina, Dessin appareil, Machine drawing, Explosions Zeichnung des Geräts, Diseño seccionado maquina.

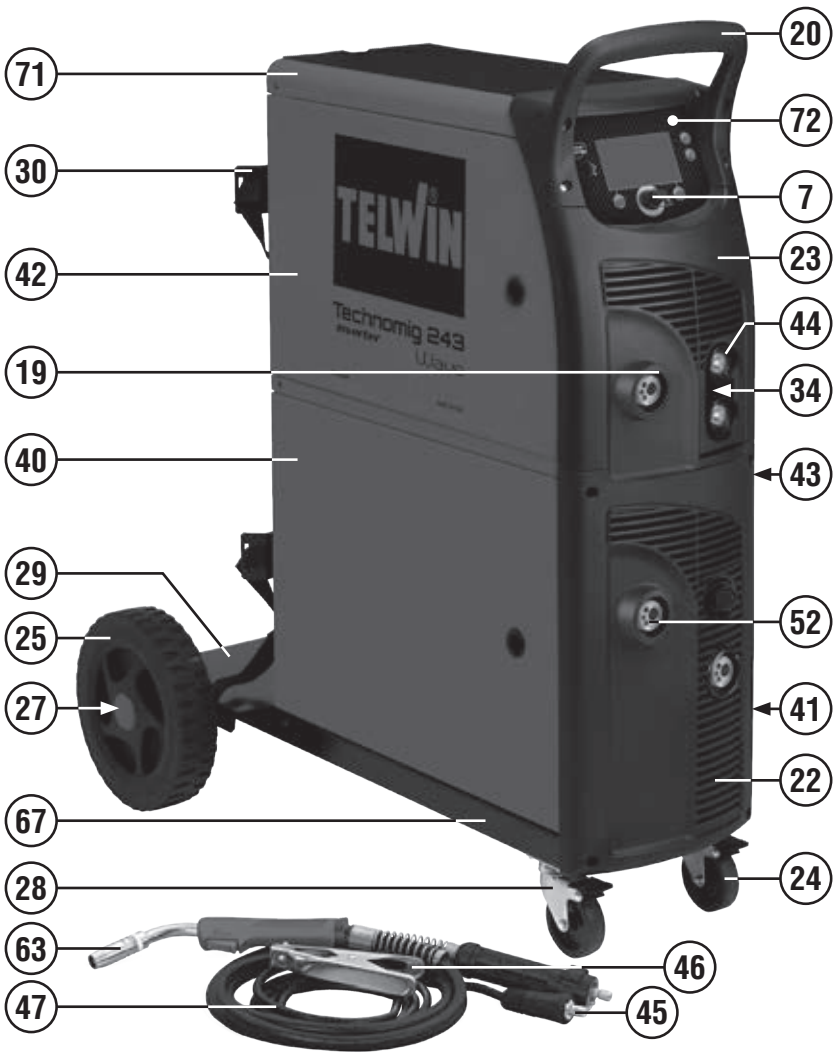

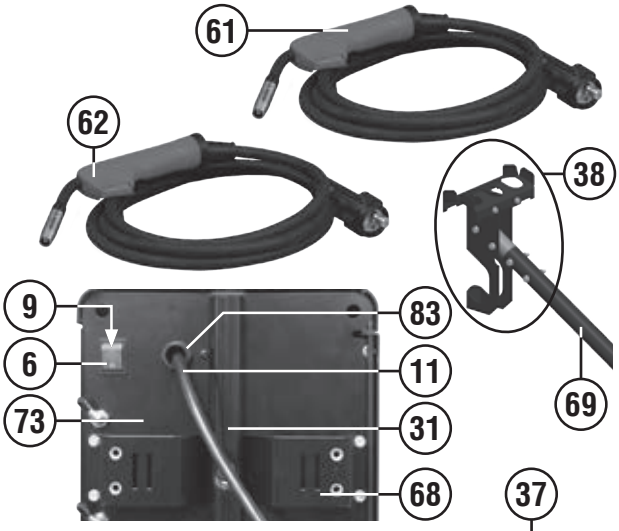

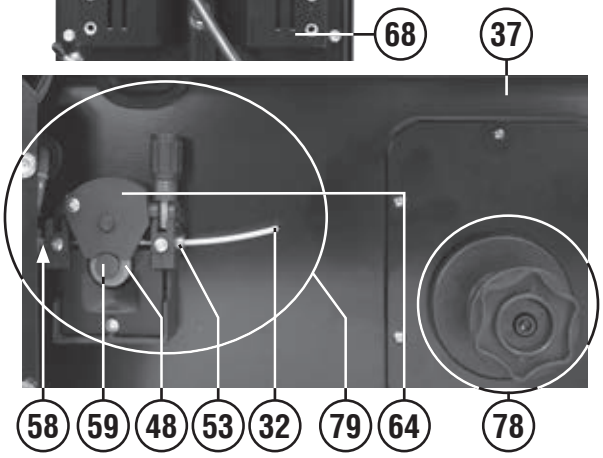

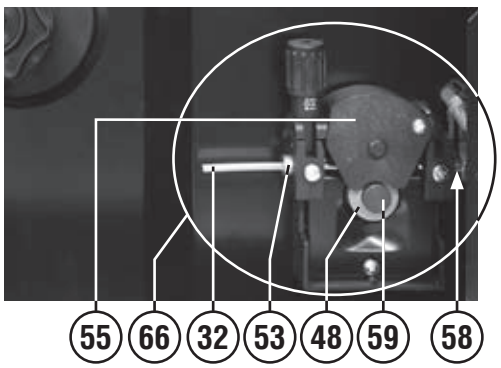

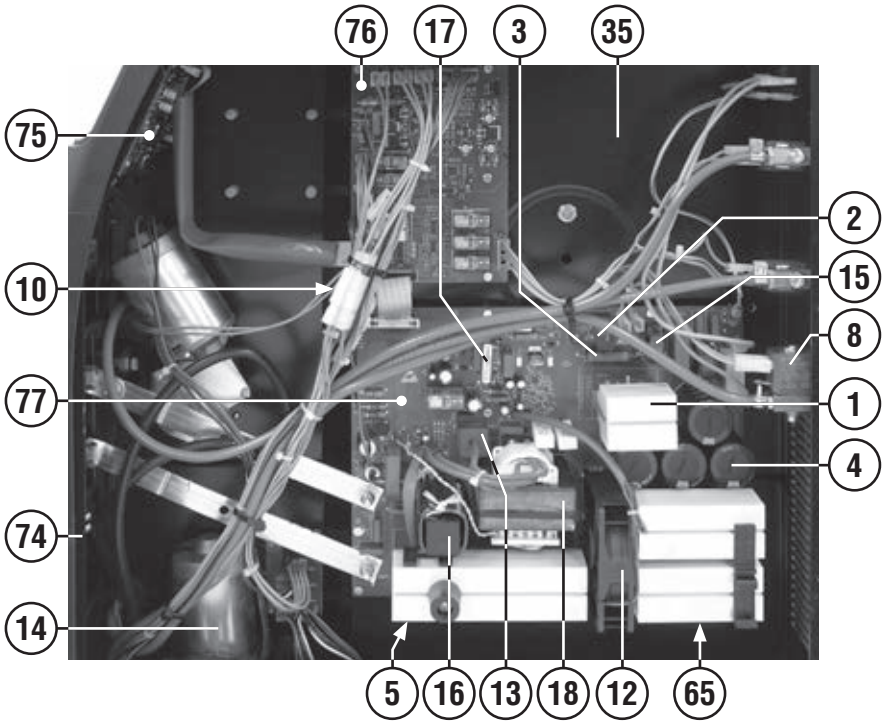

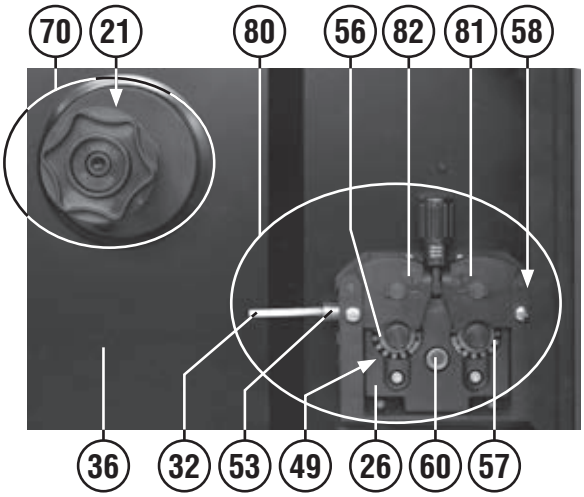

REF.	ELENCO PEZZI DI RICAMBIO PIECES DETACHEES SPARE PARTS LIST ERSATZTEILLISTE PIEZAS DE REPUESTO	CODICE CODE KODE
1	Ponte monofase Pont monophase Single phase bridge Einfasige brücke Puente monofasico	111017
2	Rele Relais Relais Relais Conectador	111211
3	Res. Filo 47r 8w 5% Res. Fil 47r 8w 5% Res. Wire 47r 8w 5% Res. Draht 47r 8w 5% Res. Hilo 47r 8w 5%	112048
4	Condensatore Condensateur Capacitor Kondensator Condensador	112694
5	Diodo Diode Diode Diode Diodo	116839
6	Interruttore Interrupteur Switch Schalter Interruptor	121248
7	Encoder Encoder Encoder Encoder Encoder	121756
8	Elettrovalvola Electrovanne Electrovalve Elektroventil Electrovalvula	121800
9	Copri interruttore Couvre interrupteur Switch cover Schalterdeckel Cubre interruptor	122353
10	Fusibile Fusible Fuse Sicherungsdraht Fusible	122742
11	Cavo alim. H05vv-f 3g02.50 L=02.50 Cable alim. H05vv-f 3g02.50 L=02.50 Mains cable h05vv-f 3g02.50 L=02.50 Netzkabel h05vv-f 3g02.50 L=02.50 Cable alim. H05vv-f 3g02.50 L=02.50	132415
12	Ventilatore Ventilateur Fan Ventilator Ventilador	152006
13	Ta Ta Ta Ta Ta	152296
14	Motoriduttore 24vdc + sensore hall Motoridcteur 24vdc + sonde hall Motoreducer 24vdc + hall sonde Motoriduktor 24vdc + hall probe Motoriductor 24vdc + sonda hall	153053
15	Induttanza filtro Inductance filter Filter inductance Filter drossel Induccion filtro	164741
16	Induttanza uscita Inductance output Output inductance Output drossel Induccion output	169808
17	Trasformatore flyback ausiliario Transformateur flyback auxiliaire Flyback auxiliary transformer Flyback hilfstransformator Transformador flyback auxiliar	169862
18	Trasformatore potenza Transformateur puissance Power transformer Leistungstransformator Transformador de potencia	169924
19	Protezione attacco torcia Support isolant torche Torch connection protection Brennersisolierlager Sosten isolator antorcha	312105
20	Assieme manico Set poignee Handle set Handgriff set Set manija	321165
21	Distanziale per aspo Entretoise pour support bobine Reel spacer Distanzstueck Espàciador por aspa	321210
22	Frontale inferiore Partie frontal inferieur Lower front panel Gerätefront unten Frontal inferior	321272
23	Frontale superiore Partie frontal superieur Upper front panel Obere gerätefront Frontal superior	321273
24	Ruota Roue Wheel Rad Rueda	322245
25	Ruota Roue Wheel Rad Rueda	321389
26	Protezione Protecion Cover Deckel Proteccion	322814
27	Asse per ruote Axes pour roue Wheels axle Raederachse Eje por rueda	422940
28	Supporto girevole + freno Support tournant + frein Swivel support + brake Drehbarerhalter + bremse Sosten giratorio + freno	484688
29	Supporto bombola Support bouteille Bottle holder Flaschenhalter Sosten bombona	645672
30	Staffa portabombola piccola Etrier porte-bouteille petite Small bottle-holder bracket Kasten fuer kleine flasche Estribo porta bombona pequena	645674
31	Supporto inferiore Suport inferieur Lower holder Unten halterung Soporte inferior	645677
32	Kit guaina entrata motore Kit gaine entree moteur Gas hose kit Drahtfuehrungsseelekit Kit vaina guiadera alambre	990097
34	Supporto presa atlas Support prise atlas Socket holder atlas Steckdose halterung atlas Soporte enchufe atlas	645728
35	Diaframma superiore Diaphragme superieur Upper diaphragm Obere diaphragma Diafragma superior	645788
36	Diaframma inferiore Diaphragme inferieur Lower diaphragm Unten diaphragma Diafragma inferior	645791
37	Diaframma inferiore sinistro Diaphragme inferieur gauche Lower diaphragm - left Unten diaphragma links Diafragma inferior izquierdo	645792
38	Kit isolante Kit isolant Insulator kit Isolationskit Kit aislante	982077
40	Sportello inferiore Guichet partie inferieur Lower side door Unten sitetuer Portezuela inferior	651212
41	Sportello inferiore sinistro Guichet partie inferieur gauche Lower side door left Unten sitetür links Portezuela inferior izquierda	651244
42	Sportello Guichet Door Tür Portezuela	656215
43	Fianco Partie lateral Side panel Seitenblech Flanco	656216
44	Presa atlas 50mmq Prise atlas 50mmq Atlas socket 50mmq Atlas steckdose 50mmq Enchufe atlas 50mmq	712036
45	Spina atlas 50mmq Fiche atlas 50mmq Atlas plug 50mmq Atlas stecker 50mmq Enchufe atlas 50mmq	712040
46	Toledo 300 pinza di massa 300a Toledo 300 borne de masse 300a Toledo 300 work clamp 300a Toledo 300 masseklemme 300a Toledo 300 borne de masa 300a	712231
47	Cavo 25mmq 3m-pinza massa-atlas 50mmq Cable 25mmq 3m-pince masse-atlas 50mmq Cable 25mmq 3m-work clamp-atlas 50mmq Kabel 25mmq 3m-massezange-atlas 50mmq Cable 25mmq 3m-pinca masa-atlas 50mmq	713192
48	Rullino traino 2r 0,6fe-0,8fe “f” Galet 2r 0,6fe-0,8fe “f” Feed roll 2r 0,6fe-0,8fe “f” Vorschubrolle 2r 0,6fe-0,8fe “f” Roldana 2r 0,6fe-0,8fe “f”	722112
49	Rullino traino 4r ø0.6fe-0.8/0.9fe “p-k” Galet 4r ø 0.6fe-0.8/0.9fe “p-k” Feed roll 4r ø 0.6fe-0.8/0.9fe “p-k” Vorschubrolle 4r ø 0.6fe-0.8/0.9fe “p-k” Roldana 4r ø 0.6fe-0.8/0.9fe “p-k”	742576
50	Rullino traino 4r ø 0.8fe-1.0fe “p-k” Galet 4r ø 0.8fe-1.0fe “p-k” Feed roll 4r ø 0.8fe-1.0fe “p-k” Vorschubrolle 4r ø 0.8fe-1.0fe “p-k” Roldana 4r ø 0.8fe-1.0fe “p-k”	722227
51	Rullino traino 4r ø 1.2fe-1.6fe “p-k” Galet 4r ø 1.2fe-1.6fe “p-k” Feed roll 4r ø 1.2fe-1.6fe “p-k” Vorschubrolle 4r ø 1.2fe-1.6fe “p-k” Roldana 4r ø 1.2fe-1.6fe “p-k”	722241
52	Attacco torcia Attelage torche Torch connection Brenneranschluss Enganche soplete	723229
53	Entrata guidafilo Entree guide fil Wire guide inlet Drahtfuehrungsseeleeingang Entrata vaina guiadera alambre	742064
54	Rullino traino 2r 0,8al-1,0al “f” Galet 2r 0,8al-1,0al “f” Feed roll 2r 0,8al-1,0al “f” Vorschubrolle 2r 0,8al-1,0al “f” Roldana 2r 0,8al-1,0al “f”	742090
55	Ancora controrullino Ancre contre-galet Anchor for pressure roller Anker für gegenrolle Ancora para contra roldana	742096
56	Adattatore Adapteur Adapter Zahnrad Adaptador	742166
57	Ingranaggio motore Engrenage motor Motor drive gear Motorszahnrad Engranaje motor	742348
58	Tubo capillare ø 2x5 Tuyau capillaire ø 2x5 Wire conduit ø 2x5 Kapillarrohr ø 2x5 Tubo capilar ø 2x5	742365
59	Vite bloccarullino Vis ferme galet Rollerfixing screw Rollerhalterschraube Tornillo bloque roldana	742397
60	Ingranaggio Engrenages Gears Zahnrad Engranaje	742590
61	Mt15 torcia mig 3m (red) Mt15 torche mig 3m (red) Mt15 mig torch 3m (red) Mt15 mig brenner 3m (red) Mt15 antorcha mig 3m (red)	742180
62	Mt15 torcia mig 3m (blue) Mt15 torche mig 3m (blue) Mt15 mig torch 3m (blue) Mt15 mig brenner 3m (blue) Mt15 antorcha mig 3m (blue)	742944
63	Mt25 torcia mig 3 m Mt25 torche mig 3 m Mt25 mig torch 3 m Mt25 mig brenner 3 m Mt25 antorcha mig 3 m	742784
64	Ancora controrullino destra Ancre contre-galet droit Right anchor for pressure roller Rechter anker fuer gegenrolle Ancora derecha para contra roldana	742726
65	Kit igbt + diodo Kit igbt + diode Kit igbt + diode Kit igbt + diode Kit igbt + diodo	981293

REF.	ELENCO PEZZI DI RICAMBIO PIECES DETACHEES SPARE PARTS LIST ERSATZTEILLISTE PIEZAS DE REPUESTO	CODICE CODE KODE
66	Kit traino due rulli Kit devidoir 2 roleaux Kit 2 rolls wirefeeder Kit 2 raeder drahtvorschub Kit alimentador de hilo 2 rollos	981496
67	Kit fondo Kit chassis Bottom kit Bodenteil kit Kit fondo	981642
68	Kit staffa supporto Kit bride support Holding bracket kit Halterungsbügel kit Kit estribo de sosten	981646
69	Kit supporto superiore Kit support superieur Upper holder kit Oben halterung kit Kit soporte superior	981647
70	Kit aspo 15kg Kit support bobine 15kg Reel kit 15kg Wickler kit 15kg Kit aspa 15kg	981703
71	Kit mantello Kit capot Cover kit Deckelkit Kit panel de cobertura	981740
72	Kit supporto display Kit support display Display holder kit Display halterung kit Kit soporte display	981810
73	Kit retro Kit partie arriere Back panel kit Rückseite kit Kit trasera	981921
74	Kit frontale Kit partie frontal Front panel kit Gerätefront kit Kit frontal	981922
75	Kit scheda tft Kit platine tft Tft card kit Tft karte kit Kit tarjeta tft	981923
76	Kit scheda controllo Kit carte controle Control board kit Steuerungskarte kit Kit tarjeta control	981924
77	Kit scheda potenza Kit carte puissance Power board kit Leistungskartekit Kit tarjeta potencia	981925
78	Kit aspo 5kg Kit support bobine 5kg Reel kit 5kg Wickler kit 5kg Kit aspa 5kg	981926
79	Kit traino due rulli Kit devidoir 2 roleaux Kit 2 rolls wirefeeder Kit 2 räder drahtvorschub Kit alimentador de hilo 2 rollos	981927
80	Traino 4 rulli Devidoir 4 rouleaux 4 Roll wirefeeder 4 Räder drahtvorschub Alimendator de hilo 4 rodillos	981928
81	Ancora controrullino sinistra Ancre contre-galet gauche Left anchor for pressure roller Linker anker für gegenrolle Ancora izquierda para contra roldana	981929
82	Ancora controrullino destra Ancre contre-galet droit Right anchor for pressure roller Rechter anker für gegenrolle Ancora derecha para contra roldana	981930
83	Kit pressacavo + ghiera Kit presse cable + embout Kit cable bushing + ring nut Kit kabelhalter + nutmutter Kit prensa cable + virola	990046

REF.	ELENCO PEZZI DI RICAMBIO PIECES DETACHEES SPARE PARTS LIST ERSATZTEILLISTE PIEZAS DE REPUESTO	CODICE CODE KODE

REF.	ELENCO PEZZI DI RICAMBIO PIECES DETACHEES SPARE PARTS LIST ERSATZTEILLISTE PIEZAS DE REPUESTO	CODICE CODE KODE

Schema elettrico, Schéma électrique, Diagram, Schaltplan, Esquema de conexiones.

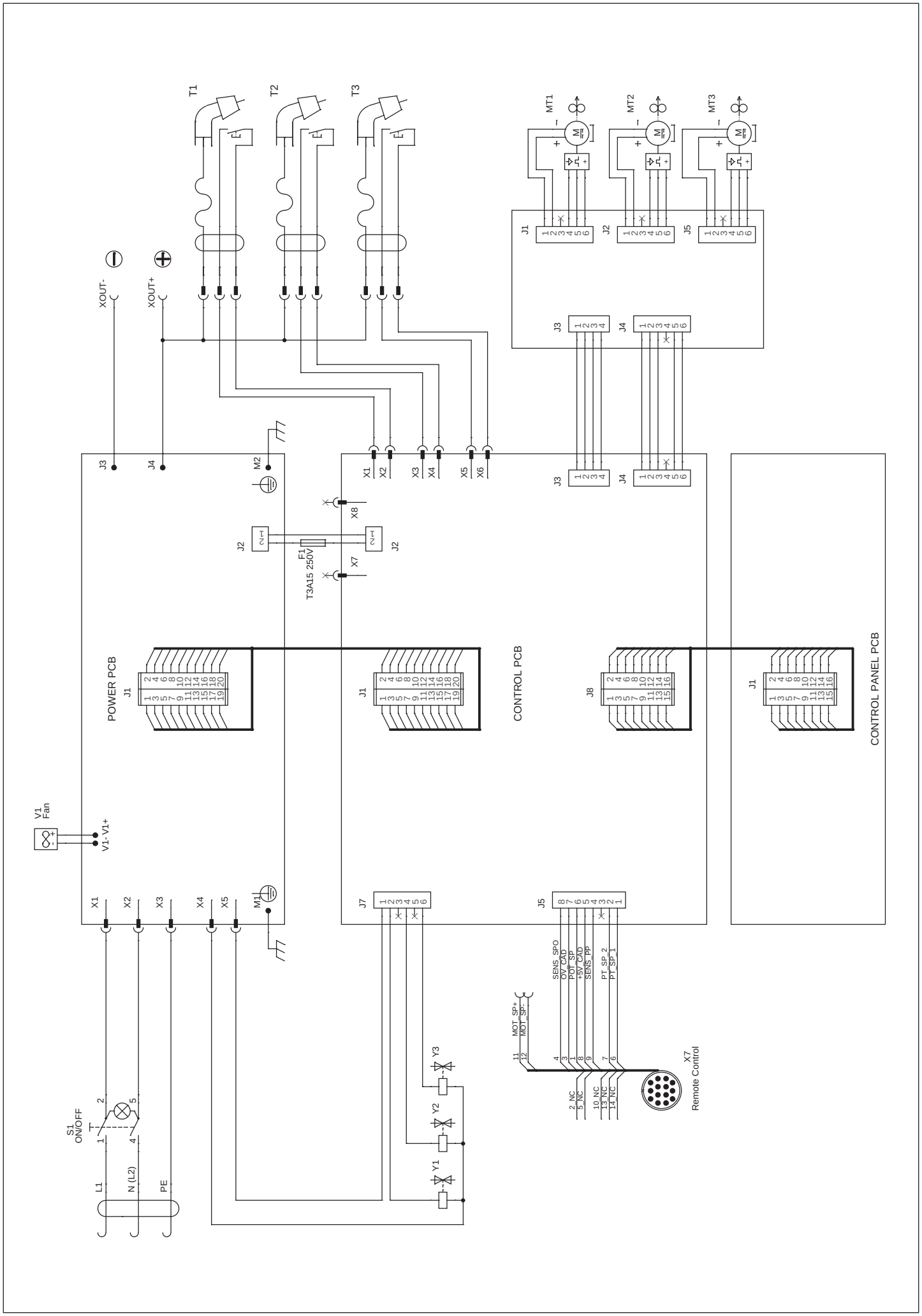

Esploso torcia, Dessin torche, Torch drawing, Schlauchpaket - Explosionszeichnung, Diseño seccionado antorcha.

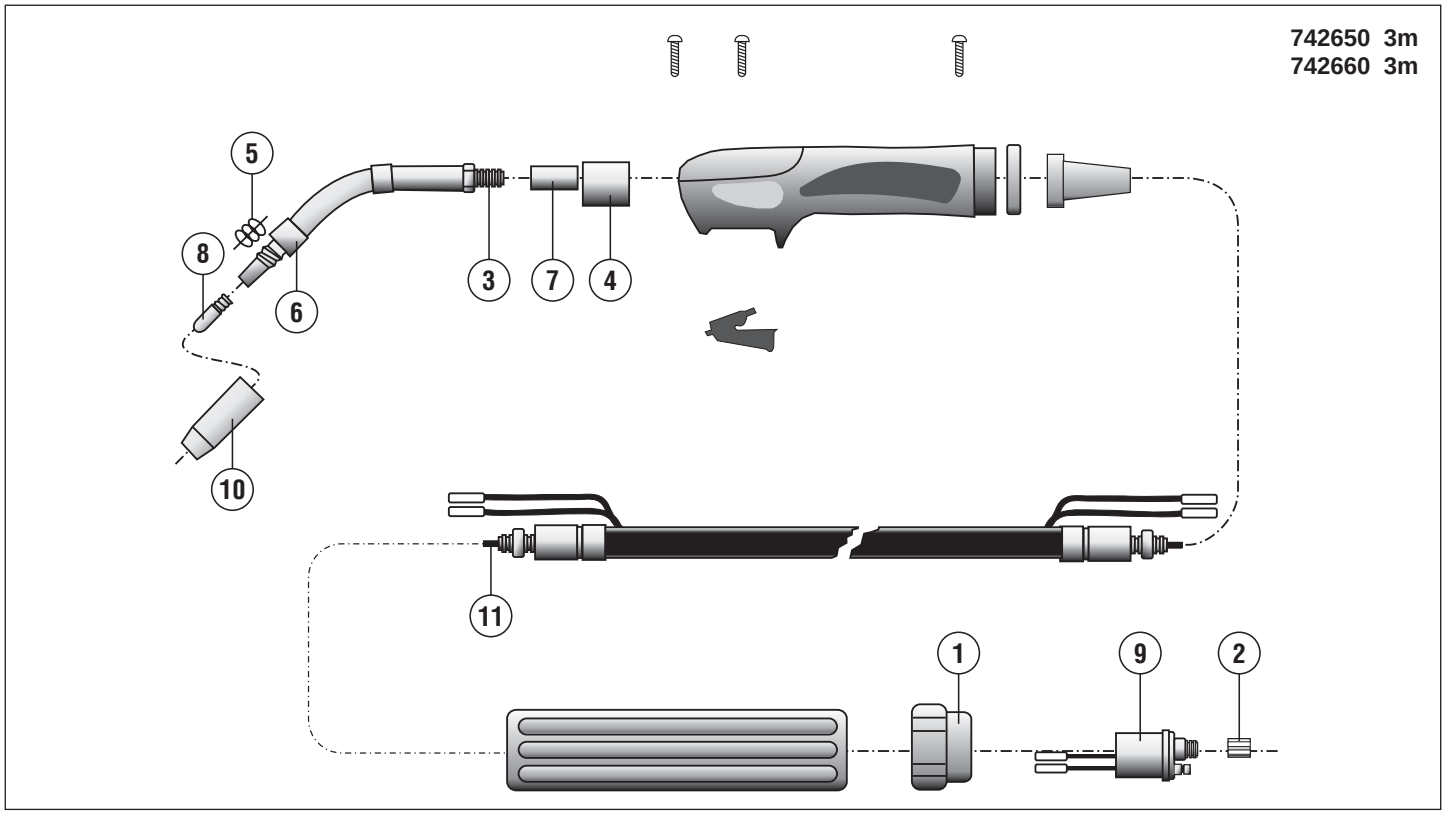

REF.	ELENCO PEZZI RICAMBIO TORCIA LISTE PIECES DETACHEES TORCHE SPARE PARTS LIST TORCH ERSATZTEILLISTE SCLAUCHPAKET PIEZAS DE REPUESTO ANTORCHA	CODICE CODE KODE
1	Ghiera fissaggio Embout fixage Ring nut Nutmutter Virola por fiyacion	722007
2	Dado fissaggio guaina Ecrou fixage gaine Liner nut Befestigungsmutter Dado por fiyacion vaina	722013
3	Lancia mt15 Lance mt15 Swan neck mt15 Brennerhals mt15 Encorvado mt15	722305
4	Isolante corpo torcia Isolant corps de torche Torch connection insulation Brenneranschlussblock isolierteil Aislador cuerpo de antorcha	722693
5	Molla per ugello tw160–180 mt15,spoolgun Ressort p. Buse tw160–180,mt15,spoolgun Nozzle spring tw 160–180, mt15, spoolgun Düsenfeder tw 160–180, mt15, spoolgun Muelle inyector tw160–180,mt15,spoolgun	722319
6	Isolante diffusore Isolant pour diffuseur Diffuser insulation Isolierbuchse Aislador diffusor	722326
7	Corpo torcia Corps de torche Torch connection Brenneranschlussblock Cuerpo de antorcha	722325
8	Tubetto di contatto d. 0,6 Mm fe Tube contact d. 0,6 Mm fe Contact tip d. 0,6 Mm fe Kontaktdüse d. 0,6 Mm fe Tubito de contacto d. 0,6 Mm fe	722415
8	Tubetto di contatto d. 0,8 Mm fe m6 Tube contact d. 0,8 Mm fe m6 Contact tip d. 0,8 Mm fe m6 Kontaktdüse d. 0,8 Mm fe m6 Tubito de contacto d. 0,8 Mm fe m6	722416
9	Corpo torcia Corp de torche Torch assy Brennerskörper Enganche antorcha	722441
10	Ugello cilindrico tw160–180,mt15,sp.Gun Bec conique tw160–180,mt15,sp.Gun Cylindrical nozzle tw160–180,mt15,sp.Gun Zylindrische düse tw160–180,mt15,sp.Gun Inyect. Cilindrico tw160–180,mt15,sp.Gun	722149
10	Ugello conico tw 160–180, mt15,spoolgun Buse conique tw 160–180, mt15,spoolgun Conical nozzle tw 160–180, mt15,spoolgun Gasdüse konisch tw 160–180,mt15,spoolgun Inyector conico tw 160–180,mt15,spoolgun	722423

REF.	ELENCO PEZZI RICAMBIO TORCIA LISTE PIECES DETACHEES TORCHE SPARE PARTS LIST TORCH ERSATZTEILLISTE SCLAUCHPAKET PIEZAS DE REPUESTO ANTORCHA	CODICE CODE KODE
11	Guaina guidafilo ø0.6-0.8 3m blu Gaine pour fil ø0.6-0.8 3m bleu Wire guide hose ø0.6-0.8 3m blue Drahtführungsseele ø0.6-0.8 3m blue Vaina guia hilo ø0.6-0.8 3m blue	722437
11	Guaina guidafilo ø1.0-1.2 3m rossa Gaine pour fil ø1.0-1.2 3m rouge Wire guide hose ø1.0-1.2 3m red Drahtführungsseele ø1.0-1.2 3m rot Vaina guia hilo ø1.0-1.2 3m roja	722689

REF.	ELENCO PEZZI RICAMBIO TORCIA LISTE PIECES DETACHEES TORCHE SPARE PARTS LIST TORCH ERSATZTEILLISTE SCLAUCHPAKET PIEZAS DE REPUESTO ANTORCHA	CODICE CODE KODE

Esploso torcia, Dessin torche, Torch drawing, Schlauchpaket - Explosionszeichnung, Diseño seccionado antorcha.

742708 3m

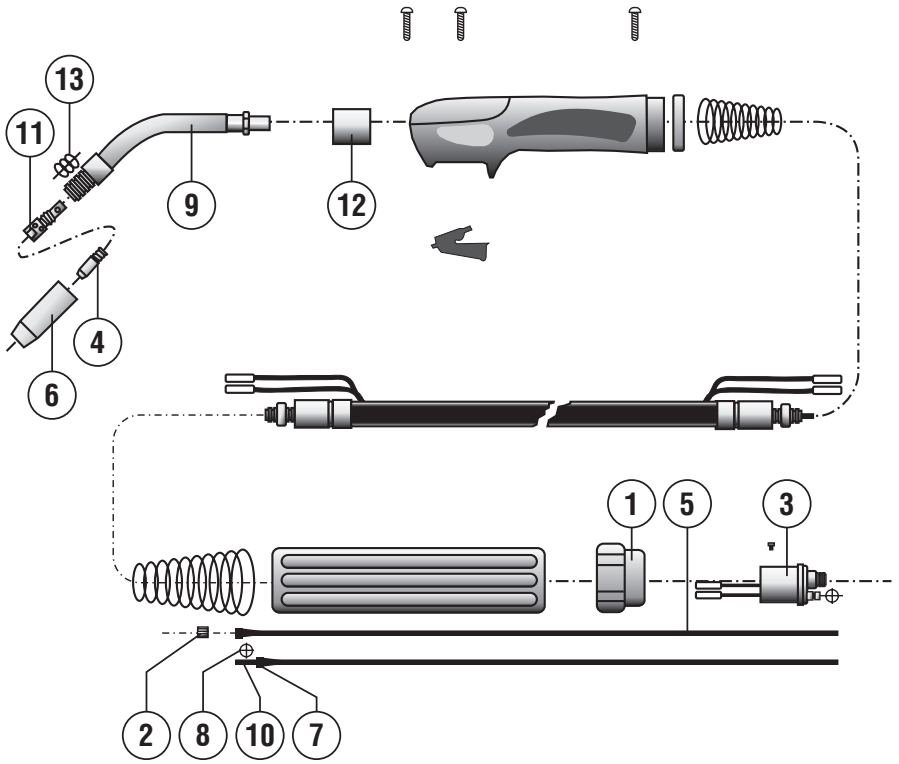

REF.	ELENCO PEZZI RICAMBIO TORCIA LISTE PIECES DETACHEES TORCHE SPARE PARTS LIST TORCH ERSATZTEILLISTE SCLAUCHPAKET PIEZAS DE REPUESTO ANTORCHA	CODICE CODE KODE
1	Ghiera fissaggio Embout fixage Ring nut Nutmutter Virola por fiyacion	722007
2	Dado fissaggio guaina Ecrou fixage gaine Liner nut Befestigungsmutter Dado por fiyacion vaina	722013
3	Corpo torcia Corp de torche Torch assy Brennerskörper Enganche antorcha	722441
4	Tubetto di contatto d. 1,2 Mm fe Tube contact d. 1,2 Mm fe Contact tip d. 1,2 Mm fe Kontaktdüse d. 1,2 Mm fe Tubito de contacto d. 1,2 Mm fe	722682
4	Tubetto di contatto d. 1 Mm fe m6 l=28mm Tube contact d. 1 Mm fe m6 l=28mm Contact tip d. 1 Mm fe m6 l=28mm Kontaktdüse d. 1 Mm fe m6 l=28mm Tubito de contacto d. 1 Mm fe m6 l=28mm	722681
4	Tubetto di contatto d. 0,8 Mm m6 Tube contact d. 0,8 Mm m6 Contact tip d. 0,8 Mm m6 Kontaktdüse d. 0,8 Mm m6 Tubito de contacto d. 0,8 Mm m6	722680
4	Tubetto di contatto d. 1,2 Mm al/flux m6 Tube contact d. 1,2 Mm al/flux m6 Contact tip d. 1,2 Mm al/flux m6 Kontaktdüse d. 1,2 Mm al/flux m6 Tubito de contacto d. 1,2 Mm al/flux m6	722553
4	Tubetto di contatto d. 1 Mm al/flux m6 Tube contact d. 1 Mm al/flux m6 Contact tip d. 1 Mm al/flux m6 Kontaktdüse d. 1 Mm al/flux m6 Tubito de contacto d. 1 Mm al/flux m6	722552
4	Tubetto di contatto d. 0,6 Mm fe Tube contact d. 0,6 Mm fe Contact tip d. 0,6 Mm fe Kontaktdüse d. 0,6 Mm fe Tubito de contacto d. 0,6 Mm fe	722415
5	Guaina guidafilo ø0.6-0.8 3m blu Gaine pour fil ø0.6-0.8 3m bleu Wire guide hose ø0.6-0.8 3m blue Drahtführungsseele ø0.6-0.8 3m blue Vaina guia hilo ø0.6-0.8 3m blue	722437
5	Guaina guidafilo ø1.0-1.2 3m rossa Gaine pour fil ø1.0-1.2 3m rouge Wire guide hose ø1.0-1.2 3m red Drahtführungsseele ø1.0-1.2 3m rot Vaina guia hilo ø1.0-1.2 3m roja	722689
5	Guaina guidafilo ø1.0-1.2 4m al Gaine pour fil ø 1.0-1.2 4m al Wire guide hose ø 1.0-1.2 4m al Drahtführungsseele ø 1.0-1.2 4m al Vaina guia hilo ø 1.0-1.2 4m al	742984

REF.	ELENCO PEZZI RICAMBIO TORCIA LISTE PIECES DETACHEES TORCHE SPARE PARTS LIST TORCH ERSATZTEILLISTE SCLAUCHPAKET PIEZAS DE REPUESTO ANTORCHA	CODICE CODE KODE
6	Ugello cilindrico mt25 Buse cylindrique mt25 Cylindrical nozzle mt25 Zylindrische düse mt25 Inyector cilindrico mt25	722684
6	Ugello conico mt25 Buse conique mt25 Conical nozzle mt25 Konische düse mt25 Inyector conico mt25	722685
6	Ugello testa fine mt25 Buse a tete fine mt25 Thin headed nozzle mt25 Verengte düse mt25 Inyector cabeza fina mt25	722686
6	Ugello per puntatura d. 18 Mm Buse pointage d. 18 Mm Spot welding nozzle d. 18 Mm Punktschweissgasdüse d. 18 Mm Inyector por puntos d. 18 Mm	722687
7	Nipples ferma guaina Nipples serre gaine Wire guide locking nipples Drahtseeleklemmnipples Nipples de bloqueo vaina	722598
8	Anello or Bague or Or ring Or ring Anillo or	722601
8	Anello or Anneau or Or ring Or ring Anillo or	722606
9	Lancia mt25 Lance mt25 Swan neck mt25 Brennerhals mt25 Encorvado mt25	722696
10	Tubetto ferma guaina Tuyau serre gaine Wire guide locking tube Drahtseeleklemmrohr Tubito de bloqueo vaina	722600
11	Diffusore gas mt25 Diffuseur gaz mt25 Gas diffuser mt25 Gasdiffusor mt25 Diffusor gas mt25	722688
12	Isolante corpo torcia Isolant corps de torche Torch connection insulation Brenneranschlussblock isolierteil Aislador cuerpo de antorcha	722693
13	Molla per ugello mt25 Ressort pour buse mt25 Nozzle spring mt25 Düsenfeder mt25 Muelle por inyector mt25	722690

REF.	ELENCO PEZZI RICAMBIO TORCIA LISTE PIECES DETACHEES TORCHE SPARE PARTS LIST TORCH ERSATZTEILLISTE SCLAUCHPAKET PIEZAS DE REPUESTO ANTORCHA	CODICE CODE KODE

ELENCO PEZZI DI RICAMBIO
LISTE PIECES DETACHEES
SPARE PARTS LIST
ERSATZTEILLISTE
PIEZAS DE REPUESTO

ELECTROMIG 220 SYNERGIC

TELWIN

Esploso macchina, Dessin appareil, Machine drawing, Explosions Zeichnung des Geräts, Diseño seccionado maquina.

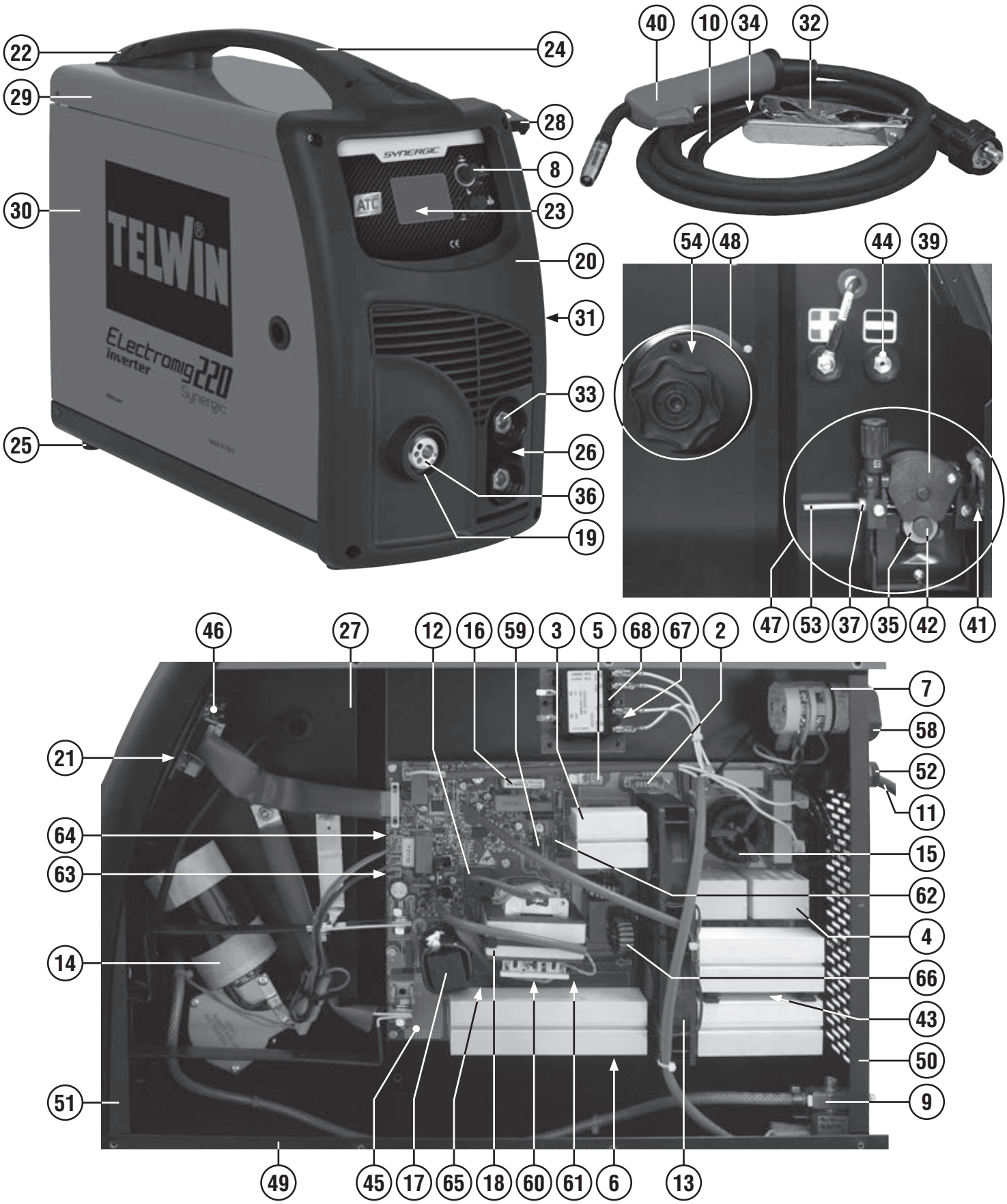

REF.	ELENCO PEZZI DI RICAMBIO PIECES DETACHEES SPARE PARTS LIST ERSATZTEILLISTE PIEZAS DE REPUESTO	CODICE CODE KODE
2	Resistenza Resistance Resistance Widerstand Resistencia	116752
3	Ponte monofase Pont monophase Single phase bridge Einfasige brücke Puente monofasico	111259
4	Condensatore Condensateur Condenser Kondensator Condensator	116882
5	Rele' Relais Relais Relais Relais	116320
6	Diodo Diode Diode Diode Diodo	116839
7	Commutatore Commutateur Switch Schalter Switch	121556
8	Manopola encoder d.15 Poignee encoder d.15 Encoder knob d.15 Griff encoder d.15 Manija encoder d.15	121315
9	Elettrovalvola Electrovanne Electrovalve Elektroventil Electrovalvula	121800
10	Cavo Cable Cable Kabel Cable	124887
11	Cavo alim. 4g1.5 2 M Cable alim. 4g1.5 2 M Mains cable 4g1.5 2 M Netzkabel 4g1.5 2 M Cable alim. 4g1.5 2 M	132237
12	Trasformatore di corrente Transformateur de courant Current transformer Stromwandler Transformador de corriente	152230
13	Ventilatore Ventilateur Fan Ventilator Ventilador	152006
14	Motore Moteur Motor Motor Motor	153033
15	Induttanza filtro Inductance filtre Filter inductor Filterdrossel Filtro induccion	111434
16	Trasformatore flyback ausiliario Transformateur flyback auxiliaire Flyback auxiliary transformer Flyback hilfstransformator Transformador flyback auxiliar	169862
17	Induttanza uscita Inductance output Output inductance Output drossel Induccion output	169808
18	Trasformatore potenza Transformateur de puissance Power trafo Leistungstransformer Transformador de potencia	169832
19	Protezione attacco torcia Support isolant torche Torch connection protection Brennersisolierlager Sosten isolator antorcha	312105
20	Frontale atlas 50mmq Partie frontal atlas 50mmq Front panel atlas 50mmq Geraetefront atlas 50mmq Frontal atlas 50mmq	321215
21	Supporto scheda Support fiche Card holder Kartehalter Sosten tarjeta	321196
22	Copertura manico Capot poignee Handlecover Handgriffsdeckel Copertura manija	321142
23	Spessore per schermo Blindage Shield Schild Proteccion	321194
24	Manico Poignee Handle Handgriff Manija	322883
25	Piedino Embout Foot Fuss Pie	323001
26	Supporto presa atlas Support prise atlas Socket holder atlas Steckdose halterung atlas Soporte enchufe atlas	645728
27	Diaframma Diaphragme Diaphragm Diaphragma Diafragma	645660
28	Gancio appendi torcia Accrocheur torche Torch hook Haken fuer brenner Gancho fijacion antorcha	645704
29	Kit mantello Kit capot Cover kit Deckel kit Kit panel de cobertura	981996
30	Sportello Guichet Door Tuer Portezuela	656162
31	Fianco Partie laterale Side panel Seitenblech Flanco	656161
32	Toledo 250 pinza di massa 250a Toledo 250 pince de masse 250a Toledo 250 work clamp 250a Toledo 250 masseklemme 250a Toledo 250 pinza de masa 250a	712030
33	Presa atlas 50mmq Prise atlas 50mmq Atlas socket 50mmq Atlas steckdose 50mmq Enchufe atlas 50mmq	712036
34	Spina atlas 50mmq Fiche atlas 50mmq Atlas plug 50mmq Atlas stecker 50mmq Enchufe atlas 50mmq	712040
35	Rullino traino 2r 0,6fe-0,8fe "f" Galet 2r 0,6fe-0,8fe "f" Feed roll 2r 0,6fe-0,8fe "f" Vorschubrolle 2r 0,6fe-0,8fe "f" Roldana 2r 0,6fe-0,8fe "f"	722112
36	Attacco torcia Attelage torche Torch connection Brenneranschluss Enganche soplete	723229
37	Entrata guidafilo Entree guide fil Wire guide inlet Drahtfuehrungsseeleeingang Entrata vaina guiadera alambre	742064
38	Rullino traino 2r 0,8al-1,0al "f" Galet 2r 0,8al-1,0al "f" Feed roll 2r 0,8al-1,0al "f" Vorschubrolle 2r 0,8al-1,0al "f" Roldana 2r 0,8al-1,0al "f"	742090
39	Ancora controrullino Ancre contre-galet Anchor for pressure roller Anker für gegenrolle Ancora para contra roldana	742096
40	Mt15 torcia mig 3m (red) Mt15 torche mig 3m (red) Mt15 mig torch 3m (red) Mt15 mig brenner 3m (red) Mt15 antorcha mig 3m (red)	742180
41	Tubo capillare ø 2x5 Tuyau capillaire ø 2x5 Wire conduit ø 2x5 Kapillarrohr ø 2x5 Tubo capilar ø 2x5	742365
42	Vite bloccarullino Vis ferme galet Rollerfixing screw Rollerhalterschraube Tornillo bloque roldana	742397
43	Kit igbt + diodo Kit igbt + diode Igbt + diode kit Igbt + diode kit Kit igbt + diodo	981370
44	Kit morsetto Kit borne Clamp kit Zange kit Kit borne	981383
45	Kit scheda completa Kit fiche complete Complete pcb kit Komplette karte kit Kit tarjeta completa	981577
46	Kit scheda pannello Kit platine frontal Kit front panel card Kit geraetefrontskarte Kit tarjeta frontal	981578
47	Kit traino due rulli Kit devidoir 2 roleaux Kit 2 rolls wirefeeder Kit 2 raeder drahtvorschub Kit alimentador de hilo 2 rollos	981496
48	Kit aspo 15kg Kit support bobine 15kg Reel kit 15kg Wickler kit 15kg Kit aspa 15kg	981703
49	Kit fondo Kit chassis Bottom kit Bodenteil kit Kit fondo	981498
50	Kit retro Kit partie arriere Back panel kit Rueckseite kit Kit trasera	981579
51	Kit frontale Kit partie frontal Front panel kit Geraetefront kit Kit frontal	981774
52	Kit pressacavo + ghiera Kit presse cable + embout Kit cable bushing + ring nut Kit kabelhalter + nutmutter Kit prensa cable + virola	990046
53	Kit guaina entrata motore Kit gaine entree moteur Gas hose kit Drahtfuehrungsseelekit Kit vaina guiadera alambre	990097
54	Distanziale per aspo Entretoise pour support bobine Reel spacer Distanzstueck Espàciador por aspa	321210
58	Assieme manopola per commutatore Set poigne pour commutateur Switch knob set Umschaltergriff set Set manjia para conmutador	323101
59	Igbt Igbt Igbt Igbt Igbt	111095
60	Varistore Varistor Varistor Varistor Varistor	116760
61	Soppressore di tensione Soppresseur de tension Voltage suppressor Spannungssoppressor Sopresor de tension	116935
62	Res. Met. 10r 2w 5% fuse Res. Met. 10r 2w 5% fuse Res. Met. 10r 2w 5% fuse Res. Met. 10r 2w 5% fuse Res. Met. 10r 2w 5% fuse	116962
63	Soppressore 24v Soppresseur de tension 24v Voltage suppressor 24v Spannungssoppressor 24v Sopresor de tension 24v	116980
64	Fusibile Fusible Fuse Sicherung Fusible	121456
65	Termostato Thermostat Thermostat Thermostat Termostato	121546
66	Induttanza Inductance Inductance Drossel Induccion	169746
67	Fusibile Fusible Fuse Sicherung Fusible	122432

REF.	ELENCO PEZZI DI RICAMBIO PIECES DETACHEES SPARE PARTS LIST ERSATZTEILLISTE PIEZAS DE REPUESTO	CODICE CODE KODE
68	Trasformatore ausiliario Transformateur auxiliaire Auxiliary transformer Hilfstransformator Transformador ausiliario	164270

REF.	ELENCO PEZZI DI RICAMBIO PIECES DETACHEES SPARE PARTS LIST ERSATZTEILLISTE PIEZAS DE REPUESTO	CODICE CODE KODE

REF.	ELENCO PEZZI DI RICAMBIO PIECES DETACHEES SPARE PARTS LIST ERSATZTEILLISTE PIEZAS DE REPUESTO	CODICE CODE KODE

Schema elettrico, Schéma électrique, Diagram, Schaltplan, Esquema de conexiones.

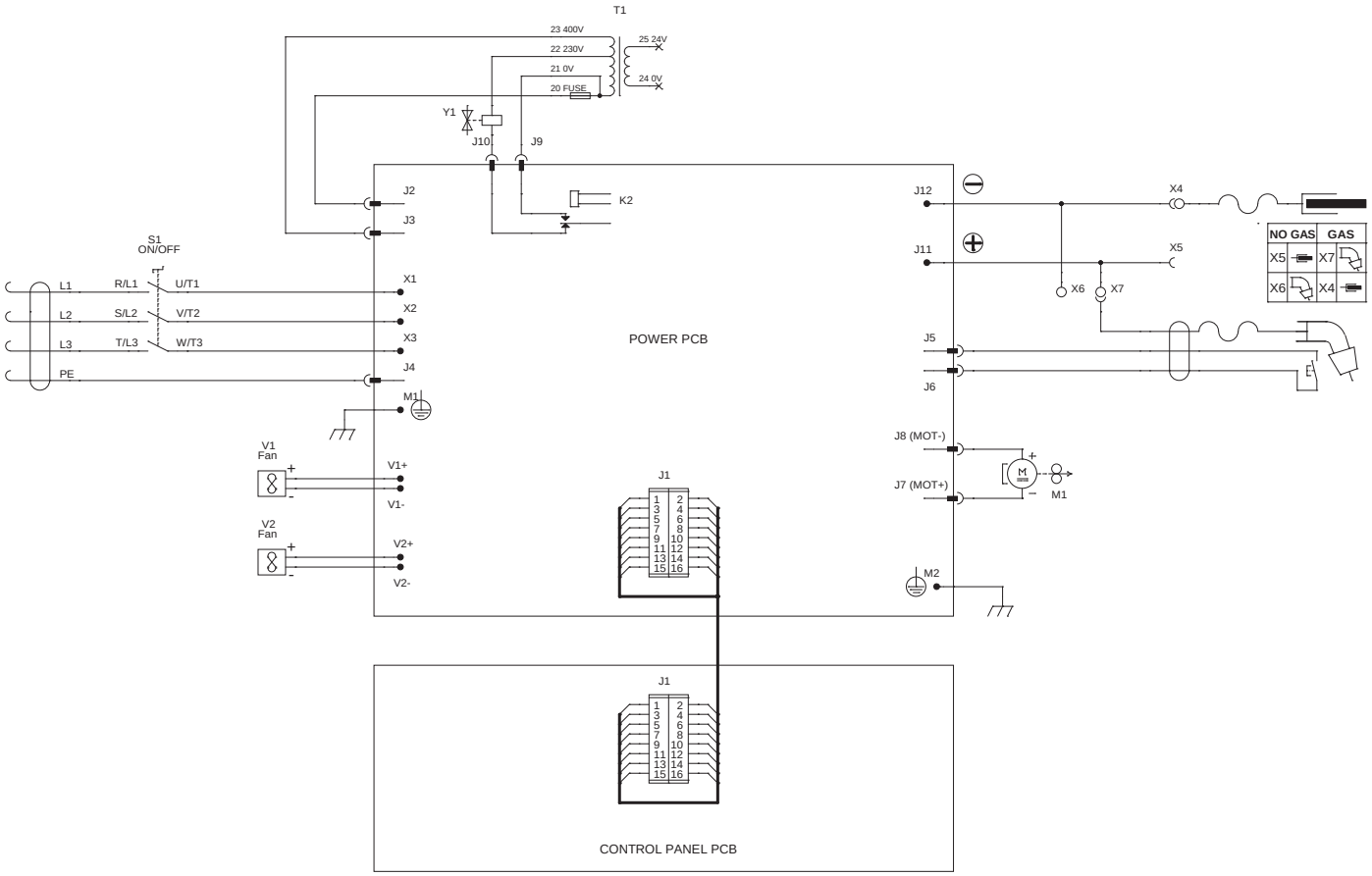

Esploso torcia, Dessin torche, Torch drawing, Schlauchpaket - Explosionszeichnung, Diseño seccionado antorcha.

742180 3m
742181 4m
742182 5m

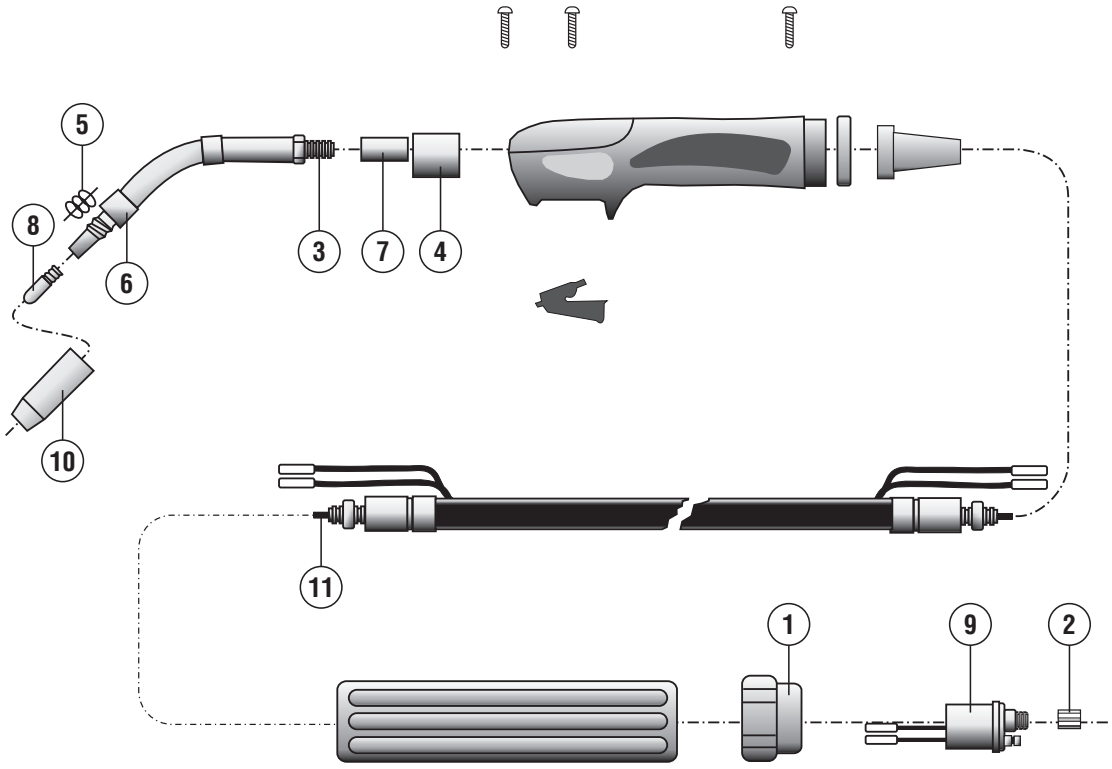

REF.	ELENCO PEZZI RICAMBIO TORCIA LISTE PIECES DETACHEES TORCHE SPARE PARTS LIST TORCH ERSATZTEILLISTE SCLAUCHPAKET PIEZAS DE REPUESTO ANTORCHA	CODICE CODE KODE
1	Ghiera fissaggio Embout fixage Ring nut Nutmutter Virola por fiyacion	722007
2	Dado fissaggio guaina Ecrou fixage gaine Liner nut Befestigungsmutter Dado por fiyacion vaina	722013
3	Lancia mt15 Lance mt15 Swan neck mt15 Brennerhals mt15 Encorvado mt15	722305
4	Isolante corpo torcia Isolant corps de torche Torch connection insulation Brenneranschlussblock isolierteil Aislador cuerpo de antorcha	722693
5	Molla per ugello tw160–180 mt15,spoolgun Ressort p. Buse tw160–180,mt15,spoolgun Nozzle spring tw 160–180, mt15, spoolgun Düsenfeder tw 160–180, mt15, spoolgun Muelle inyector tw160–180,mt15,spoolgun	722319
6	Isolante diffusore Isolant pour diffuseur Diffuser insulation Isolierbuchse Aislador diffusor	722326
7	Corpo torcia Corps de torche Torch connection Brenneranschlussblock Cuerpo de antorcha	722325
8	Tubetto di contatto d. 0,6 Mm fe Tube contact d. 0,6 Mm fe Contact tip d. 0,6 Mm fe Kontaktdüse d. 0,6 Mm fe Tubito de contacto d. 0,6 Mm fe	722415
8	Tubetto di contatto d. 0,8 Mm fe m6 Tube contact d. 0,8 Mm fe m6 Contact tip d. 0,8 Mm fe m6 Kontaktdüse d. 0,8 Mm fe m6 Tubito de contacto d. 0,8 Mm fe m6	722416
9	Corpo torcia Corp de torche Torch assy Brennerskörper Enganche antorcha	722441
10	Ugello cilindrico tw160–180,mt15,sp.Gun Bec conique tw160–180,mt15,sp.Gun Cylindrical nozzle tw160–180,mt15,sp.Gun Zylindrische düse tw160–180,mt15,sp.Gun Inyect. Cilindrico tw160–180,mt15,sp.Gun	722149
10	Ugello conico tw 160–180, mt15,spoolgun Buse conique tw 160–180, mt15,spoolgun Conical nozzle tw 160–180, mt15,spoolgun Gasdüse konisch tw 160–180,mt15,spoolgun Inyector conico tw 160–180,mt15,spoolgun	722423

REF.	ELENCO PEZZI RICAMBIO TORCIA LISTE PIECES DETACHEES TORCHE SPARE PARTS LIST TORCH ERSATZTEILLISTE SCLAUCHPAKET PIEZAS DE REPUESTO ANTORCHA	CODICE CODE KODE
11	Guaina guidafilo ø0.6-0.8 3m blu Gaine pour fil ø0.6-0.8 3m bleu Wire guide hose ø0.6-0.8 3m blue Drahtführungsseele ø0.6-0.8 3m blue Vaina guia hilo ø0.6-0.8 3m blue	722437
11	Guaina guidafilo ø1.0-1.2 3m rossa Gaine pour fil ø1.0-1.2 3m rouge Wire guide hose ø1.0-1.2 3m red Drahtführungsseele ø1.0-1.2 3m rot Vaina guia hilo ø1.0-1.2 3m roja	722689

REF.	ELENCO PEZZI RICAMBIO TORCIA LISTE PIECES DETACHEES TORCHE SPARE PARTS LIST TORCH ERSATZTEILLISTE SCLAUCHPAKET PIEZAS DE REPUESTO ANTORCHA	CODICE CODE KODE

ELENCO PEZZI DI RICAMBIO
LISTE PIECES DETACHEES
SPARE PARTS LIST
ERSATZTEILLISTE
PIEZAS DE REPUESTO

ELECTROMIG 300 SYNERGIC

TELWIN

Esploso macchina, Dessin appareil, Machine drawing, Explosions Zeichnung des Geräts, Diseño seccionado maquina.

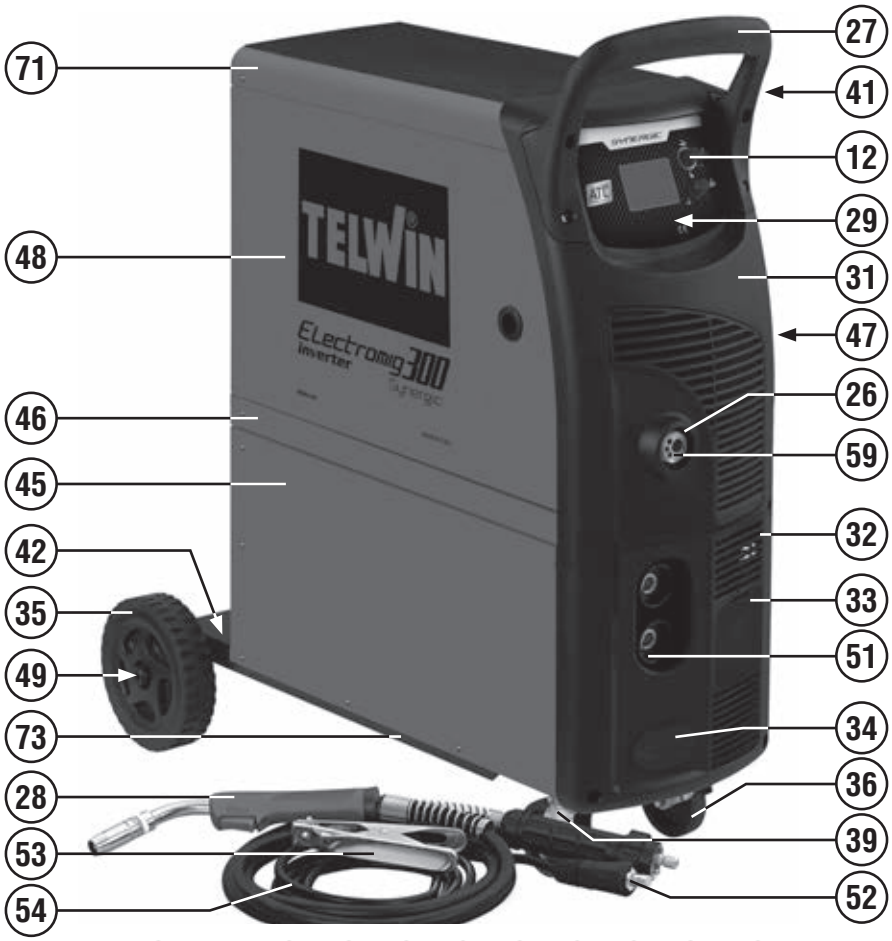

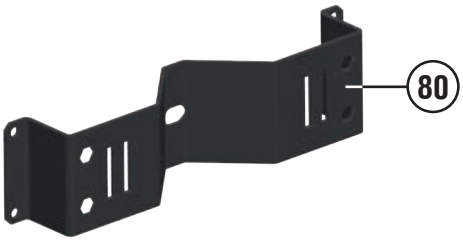

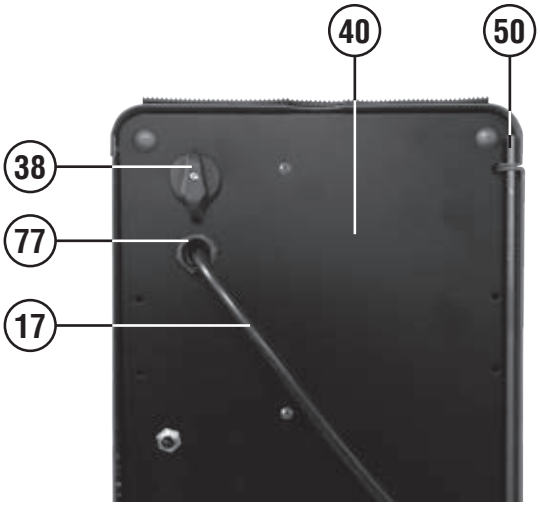

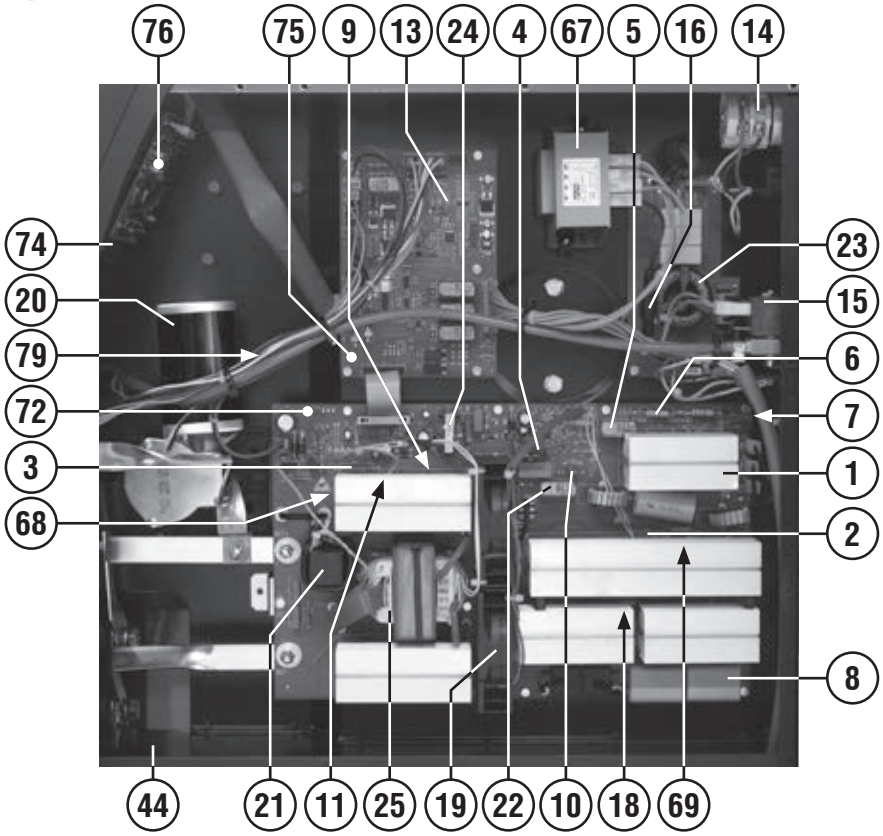

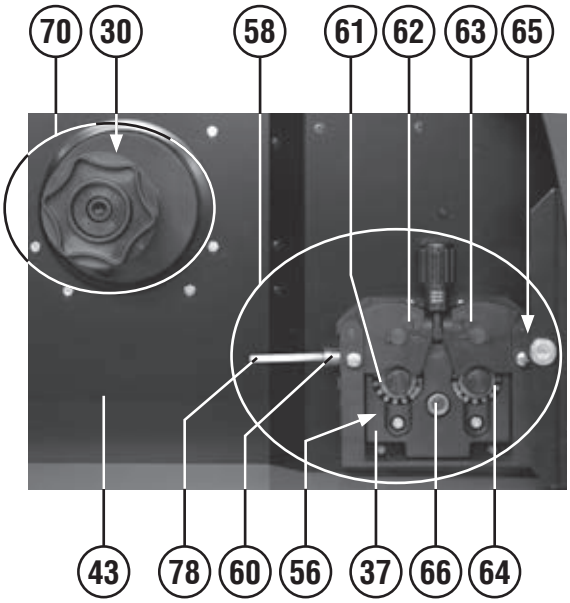

REF.	ELENCO PEZZI DI RICAMBIO PIECES DETACHEES SPARE PARTS LIST ERSATZTEILLISTE PIEZAS DE REPUESTO	CODICE CODE KODE
1	Ponte monofase Pont monophase Single phase bridge Einfasige brücke Puente monofasico	111017
2	Res. Met. 22r 5w 5% Res. Met. 22r 5w 5% Res. Met. 22r 5w 5% Res. Met. 22r 5w 5% Res. Met. 22r 5w 5%	111327
3	Res. Met. 10r 5w 5% Res. Met. 10r 5w 5% Res. Met. 10r 5w 5% Res. Met. 10r 5w 5% Res. Met. 10r 5w 5%	112374
4	Igbt Igbt Igbt Igbt Igbt	111094
5	Rele' Relais Relais Relais Relais	116320
6	Resistenza Resistance Resistance Widerstand Resistencia	116752
7	Varistore Varistor Varistor Varistor Varistor	116760
8	Condensatore Condensateur Condenser Kondensator Condensator	116882
9	Soppressore di tensione Soppresseur de tension Voltage suppressor Spannungssoppressor Sopresor de tension	116935
10	Res. Met. 10r 2w 5% fuse Res. Met. 10r 2w 5% fuse Res. Met. 10r 2w 5% fuse Res. Met. 10r 2w 5% fuse Res. Met. 10r 2w 5% fuse	116962
11	Termostato Thermostat Thermal switch Thermostat Termostato	121261
12	Manopola encoder d.15 Poignee encoder d.15 Encoder knob d.15 Griff encoder d.15 Manija encoder d.15	121315
13	Fusibile Fusible Fuse Sicherung Fusible	121456
14	Commutatore Commutateur Switch Schalter Switch	121556
15	Elettrovalvola Electrovanne Electrovalve Elektroventil Electrovalvula	121800
16	Fusibile Fusible Fuse Sicherung Fusible	122437
17	Cavo alim. 4g1.5 2 M Cable alim. 4g1.5 2 M Mains cable 4g1.5 2 M Netzkabel 4g1.5 2 M Cable alim. 4g1.5 2 M	132237
18	Trasformatore di corrente Transformateur de courant Current transformer Stromwandler Transformador de corriente	152230
19	Ventilatore Ventilateur Fan Ventilator Ventilador	152269
20	Motore Moteur Motor Motor Motor	153033
21	Induttanza Inductance Inductance Drossel Induccion	169556
22	Induttanza Inductance Inductance Drossel Induccion	169746
23	Induttanza filtro Inductance filtre Filter inductor Filterdrossel Filtro induccion	169747
24	Trasformatore flyback ausiliario Transformateur flyback auxiliaire Flyback auxiliary transformer Flyback hilfstransformator Transformador flyback auxiliar	169862
25	Trasformatore potenza Transformateur de puissance Power trafo Leistungstransformer Transformador de potencia	169887
26	Protezione attacco torcia Support isolant torche Torch connection protection Brennersisolierlager Sosten isolator antorcha	312105
27	Assieme manico Set poignee Handle set Handgriff set Set manija	321165
28	Mt25 torcia mig 3m Mt25 torche mig 3m Mt25 mig torch 3m Mt25 mig brenner 3m Mt25 antorcha mig 3m	742183
29	Kit supporto display Kit support display Display holder kit Display halterung kit Kit soporte display	981817
30	Distanziale per aspo Entretoise pour support bobine Reel spacer Distanzstueck Espàciador por aspa	321210
31	Frontale superiore Partie frontal superieur Upper front panel Obere geraetefront Frontal superior	321137
32	Frontale inferiore Partie frontal inferieur Lower front panel Geraetefront unten Frontal inferior	321232
33	Tappo Bouchon Cap Stopfen Tapon	321233
34	Tappo Bouchon Cap Stopfen Tapon	321234
35	Ruota Roue Wheel Rad Rueda	321390
36	Ruota Roue Wheel Rad Rueda	322245
37	Protezione Protecion Cover Deckel Proteccion	322814
38	Assieme manopola per commutatore Set poigne pour commutateur Switch knob set Umschaltergriff set Set manjia para conmutador	323101
39	Supporto girevole + freno Support tournant + frein Swivel support + brake Drehbarerhalter + bremse Sosten giratorio + freno	484688
40	Retro Partie arriere Back panel Rueckseite Trasera	642524
41	Gancio appendi torcia Accrocheur torche Torch hook Haken fuer brenner Gancho fijacion antorcha	645704
42	Staffa asse ruote Bride axe roues Wheels axle braket Radachsebuegel Estribo eje ruedas	645715
43	Diaframma Diaphragme Diaphragm Diaphragma Diafragma	645745
44	Ripiano Surface Surface Deckel Plano	645747
45	Fianco dx Partie lateral Right side panel Rechtes seitenteil Panel derecho	651242
46	Vano aspo Support bobine vain Reel space Wickler raum Espacio aspa	651240
47	Fianco sx Partie lateral Side panel Linkes seitenteil Panel izquierdo	656202
48	Sportello Guichet Door Tuer Portezuela	656203
49	Asse ruote Axe roues Wheels axle Radachse Eje ruedas	681067
50	Perno sportello Pivot guichet Door pin Tuerzapfen Perno portezuela	691013
51	Presa atlas 50mmq Prise atlas 50mmq Atlas socket 50mmq Atlas steckdose 50mmq Enchufe atlas 50mmq	712036
52	Spina atlas 50mmq Fiche atlas 50mmq Atlas plug 50mmq Atlas stecker 50mmq Enchufe atlas 50mmq	712040
53	Toledo 300 pinza di massa 300a Toledo 300 borne de masse 300a Toledo 300 work clamp 300a Toledo 300 masseklemme 300a Toledo 300 borne de masa 300a	712231
54	Cavo 25mmq 3m-pinza massa-atlas 50mmq Cable 25mmq 3m-pince masse-atlas 50mmq Cable 25mmq 3m-work clamp-atlas 50mmq Kabel 25mmq 3m-massezange-atlas 50mmq Cable 25mmq 3m-pinca masa-atlas 50mmq	713192
55	Rullino traino 4r ø0.6fe-0.8/0.9fe “p-k” Galet 4r ø 0.6fe-0.8/0.9fe “p-k” Feed roll 4r ø 0.6fe-0.8/0.9fe “p-k” Vorschubrolle 4r ø 0.6fe-0.8/0.9fe “p-k” Roldana 4r ø 0.6fe-0.8/0.9fe “p-k”	742576
56	Rullino traino 4r ø 0.8fe-1.0fe “p-k” Galet 4r ø 0.8fe-1.0fe “p-k” Feed roll 4r ø 0.8fe-1.0fe “p-k” Vorschubrolle 4r ø 0.8fe-1.0fe “p-k” Roldana 4r ø 0.8fe-1.0fe “p-k”	722227
57	Rullino traino 4r ø 1.2fe-1.6fe “p-k” Galet 4r ø 1.2fe-1.6fe “p-k” Feed roll 4r ø 1.2fe-1.6fe “p-k” Vorschubrolle 4r ø 1.2fe-1.6fe “p-k” Roldana 4r ø 1.2fe-1.6fe “p-k”	722241
58	Traino 4 rulli Devidoir 4 rouleaux 4 Roll wirefeeder 4 Räder drahtvorschub Alimendator de hilo 4 rodillos	981928
59	Attacco torcia Attelage torche Torch connection Brenneranschluss Enganche soplete	723229
60	Entrata guidafilo Entree guide fil Wire guide inlet Drahtfuehrungsseeleeingang Entrata vaina guiadera alambre	742064
61	Adattatore Adapteur Adapter Zahnrad Adaptador	742166
62	Ancora controrullino sinistra Ancre contre-galet gauche Left anchor for pressure roller Linker anker für gegenrolle Ancora izquierda para contra roldana	981929
63	Ancora controrullino destra Ancre contre-galet droit Right anchor for pressure roller Rechter anker für gegenrolle Ancora derecha para contra roldana	981930

REF.	ELENCO PEZZI DI RICAMBIO PIECES DETACHEES SPARE PARTS LIST ERSATZTEILLISTE PIEZAS DE REPUESTO	CODICE CODE KODE
64	Ingranaggio motore Engrenage motor Motor drive gear Motorszahnrad Engranaje motor	742348
65	Tubo capillare ø 2x5 Tuyau capillaire ø 2x5 Wire conduit ø 2x5 Kapillarrohr ø 2x5 Tubo capilar ø 2x5	742365
66	Ingranaggio Engrenages Gears Zahnrad Engranaje	742590
67	Kit autotrasfo Kit autotrasfo Autotrasfo kit Autotrasfo kit Kit autotrasfo	981278
68	Kit diodi Kit diodes Diode kit Diode kit Kit diodo	981632
69	Kit igbt + trasformatore impulsi Kit igbt + transformateur d'impulsions Kit igbt + impulse transformer Kit igbt + impuls-transformator Kit igbt + transformador de impulsos	981633
70	Kit aspo 15kg Kit support bobine 15kg Reel kit 15kg Wickler kit 15kg Kit aspa 15kg	981703

REF.	ELENCO PEZZI DI RICAMBIO PIECES DETACHEES SPARE PARTS LIST ERSATZTEILLISTE PIEZAS DE REPUESTO	CODICE CODE KODE
71	Kit mantello Kit capot Cover kit Deckelkit Kit panel de cobertura	981740
72	Kit scheda completa Kit fiche complete Complete pcb kit Komplette karte kit Kit tarjeta completa	981814
73	Kit fondo Kit chassis Bottom kit Bodenteil kit Kit fondo	981770
74	Kit frontale Kit partie frontal Front panel kit Geraetefront kit Kit frontal	981815
75	Kit scheda controllo Kit carte controle Control board kit Steuerungskarte kit Kit tarjeta control	981885
76	Kit scheda pannello Kit platine frontal Kit front panel card Kit geraetefrontskarte Kit tarjeta frontal	981816
77	Kit pressacavo + ghiera Kit presse cable + embout Kit cable bushing + ring nut Kit kabelhalter + nutmutter Kit prensa cable + virola	990046

REF.	ELENCO PEZZI DI RICAMBIO PIECES DETACHEES SPARE PARTS LIST ERSATZTEILLISTE PIEZAS DE REPUESTO	CODICE CODE KODE
78	Kit guaina entrata motore Kit gaine entree moteur Gas hose kit Drahtfuehrungsseelekit Kit vaina guiadera alambre	990097
79	Fusibile Fusible Fuse Sicherung Fusible	122434
80	Staffa portabombola Etrier porte-bouteille Bottle-holder bracket Kasten fuer flasche Estribo porta bombona	645673

Schema elettrico, Schéma électrique, Diagram, Schaltplan, Esquema de conexiones.

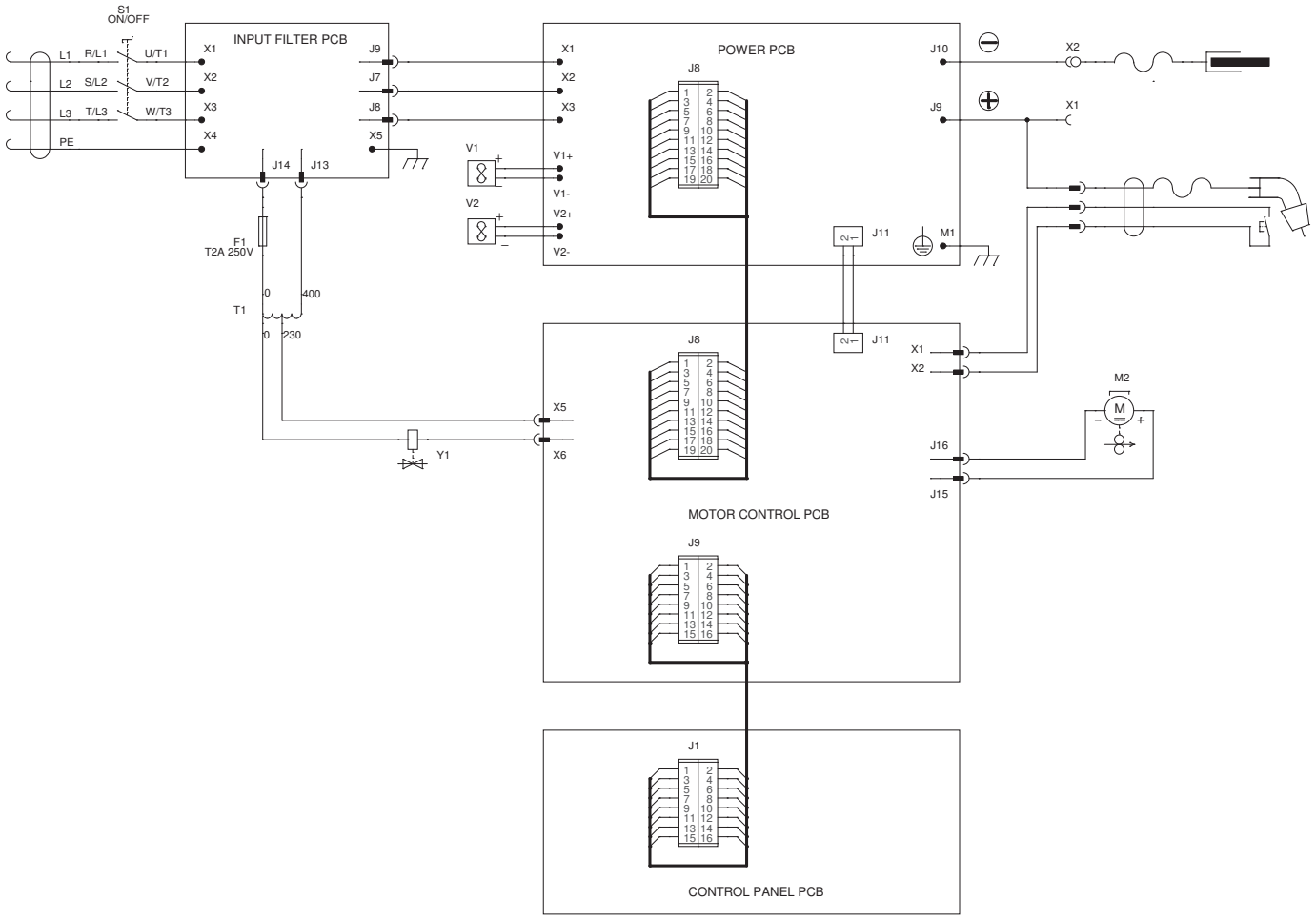

Esploso torcia, Dessin torche, Torch drawing, Schlauchpaket - Explosionszeichnung, Diseño seccionado antorcha.

742183 3m
742184 4m
742185 5m

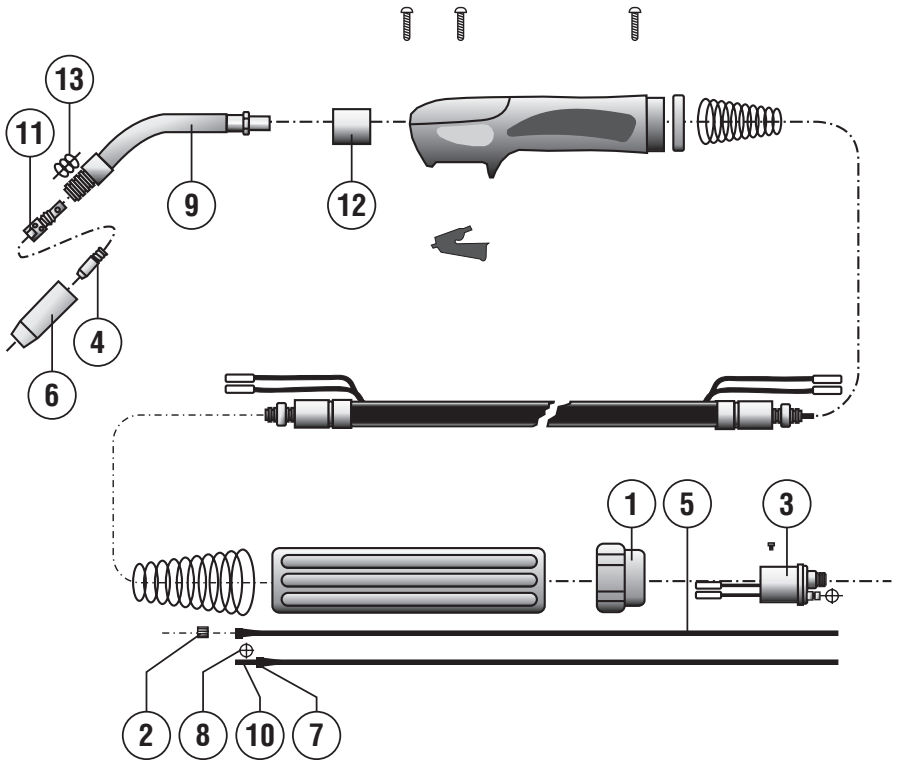

REF.	ELENCO PEZZI RICAMBIO TORCIA LISTE PIECES DETACHEES TORCHE SPARE PARTS LIST TORCH ERSATZTEILLISTE SCLAUCHPAKET PIEZAS DE REPUESTO ANTORCHA	CODICE CODE KODE
1	Ghiera fissaggio Embout fixage Ring nut Nutmutter Virola por fiyacion	722007
2	Dado fissaggio guaina Ecrou fixage gaine Liner nut Befestigungsmutter Dado por fiyacion vaina	722013
3	Corpo torcia Corp de torche Torch assy Brennerskörper Enganche antorcha	722441
4	Tubetto di contatto d. 1,2 Mm fe Tube contact d. 1,2 Mm fe Contact tip d. 1,2 Mm fe Kontaktdüse d. 1,2 Mm fe Tubito de contacto d. 1,2 Mm fe	722682
4	Tubetto di contatto d. 1 Mm fe m6 l=28mm Tube contact d. 1 Mm fe m6 l=28mm Contact tip d. 1 Mm fe m6 l=28mm Kontaktdüse d. 1 Mm fe m6 l=28mm Tubito de contacto d. 1 Mm fe m6 l=28mm	722681
4	Tubetto di contatto d. 0,8 Mm m6 Tube contact d. 0,8 Mm m6 Contact tip d. 0,8 Mm m6 Kontaktdüse d. 0,8 Mm m6 Tubito de contacto d. 0,8 Mm m6	722680
4	Tubetto di contatto d. 1,2 Mm al/flux m6 Tube contact d. 1,2 Mm al/flux m6 Contact tip d. 1,2 Mm al/flux m6 Kontaktdüse d. 1,2 Mm al/flux m6 Tubito de contacto d. 1,2 Mm al/flux m6	722553
4	Tubetto di contatto d. 1 Mm al/flux m6 Tube contact d. 1 Mm al/flux m6 Contact tip d. 1 Mm al/flux m6 Kontaktdüse d. 1 Mm al/flux m6 Tubito de contacto d. 1 Mm al/flux m6	722552
4	Tubetto di contatto d. 0,6 Mm fe Tube contact d. 0,6 Mm fe Contact tip d. 0,6 Mm fe Kontaktdüse d. 0,6 Mm fe Tubito de contacto d. 0,6 Mm fe	722415
5	Guaina guidafilo ø0.6-0.8 3m blu Gaine pour fil ø0.6-0.8 3m bleu Wire guide hose ø0.6-0.8 3m blue Drahtführungsseele ø0.6-0.8 3m blue Vaina guia hilo ø0.6-0.8 3m blue	722437
5	Guaina guidafilo ø1.0-1.2 3m rossa Gaine pour fil ø1.0-1.2 3m rouge Wire guide hose ø1.0-1.2 3m red Drahtführungsseele ø1.0-1.2 3m rot Vaina guia hilo ø1.0-1.2 3m roja	722689
5	Guaina guidafilo ø1.0-1.2 4m al Gaine pour fil ø 1.0-1.2 4m al Wire guide hose ø 1.0-1.2 4m al Drahtführungsseele ø 1.0-1.2 4m al Vaina guia hilo ø 1.0-1.2 4m al	742984

REF.	ELENCO PEZZI RICAMBIO TORCIA LISTE PIECES DETACHEES TORCHE SPARE PARTS LIST TORCH ERSATZTEILLISTE SCLAUCHPAKET PIEZAS DE REPUESTO ANTORCHA	CODICE CODE KODE
6	Ugello cilindrico mt25 Buse cylindrique mt25 Cylindrical nozzle mt25 Zylindrische düse mt25 Inyector cilindrico mt25	722684
6	Ugello conico mt25 Buse conique mt25 Conical nozzle mt25 Konische düse mt25 Inyector conico mt25	722685
6	Ugello testa fine mt25 Buse a tete fine mt25 Thin headed nozzle mt25 Verengte düse mt25 Inyector cabeza fina mt25	722686
6	Ugello per puntatura d. 18 Mm Buse pointage d. 18 Mm Spot welding nozzle d. 18 Mm Punktschweissgasdüse d. 18 Mm Inyector por puntos d. 18 Mm	722687
7	Nipples ferma guaina Nipples serre gaine Wire guide locking nipples Drahtseeleklemmnipples Nipples de bloqueo vaina	722598
8	Anello or Bague or Or ring Or ring Anillo or	722601
8	Anello or Anneau or Or ring Or ring Anillo or	722606
9	Lancia mt25 Lance mt25 Swan neck mt25 Brennerhals mt25 Encorvado mt25	722696
10	Tubetto ferma guaina Tuyau serre gaine Wire guide locking tube Drahtseeleklemmrohr Tubito de bloqueo vaina	722600
11	Diffusore gas mt25 Diffuseur gaz mt25 Gas diffuser mt25 Gasdiffusor mt25 Diffusor gas mt25	722688
12	Isolante corpo torcia Isolant corps de torche Torch connection insulation Brenneranschlussblock isolierteil Aislador cuerpo de antorcha	722693
13	Molla per ugello mt25 Ressort pour buse mt25 Nozzle spring mt25 Düsenfeder mt25 Muelle por inyector mt25	722690

REF.	ELENCO PEZZI RICAMBIO TORCIA LISTE PIECES DETACHEES TORCHE SPARE PARTS LIST TORCH ERSATZTEILLISTE SCLAUCHPAKET PIEZAS DE REPUESTO ANTORCHA	CODICE CODE KODE

ELENCO PEZZI DI RICAMBIO
LISTE PIECES DETACHEES
SPARE PARTS LIST
ERSATZTEILLISTE
PIEZAS DE REPUESTO

ELECTROMIG 400 SYNERGIC

TELWIN

Esploso macchina, Dessin appareil, Machine drawing, Explosions Zeichnung des Geräts, Diseño seccionado maquina.

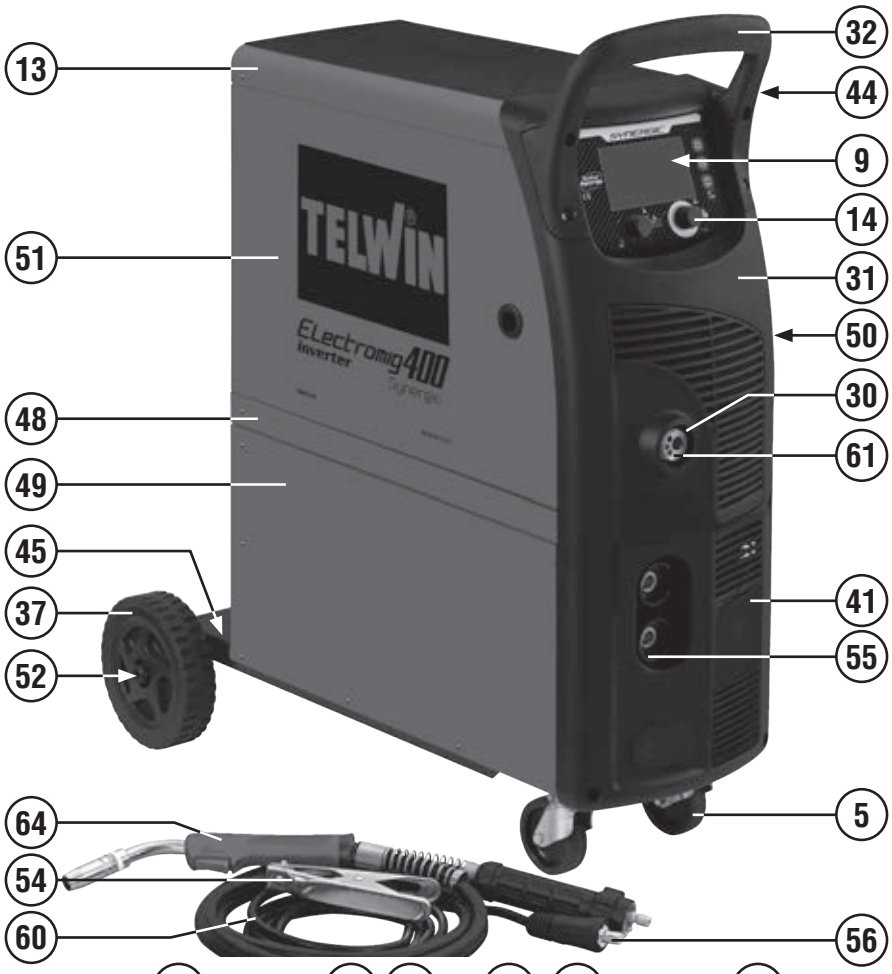

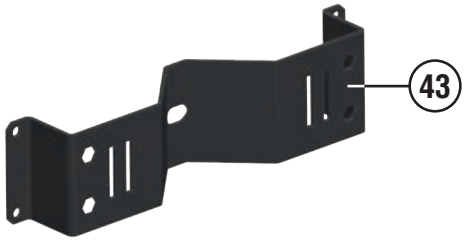

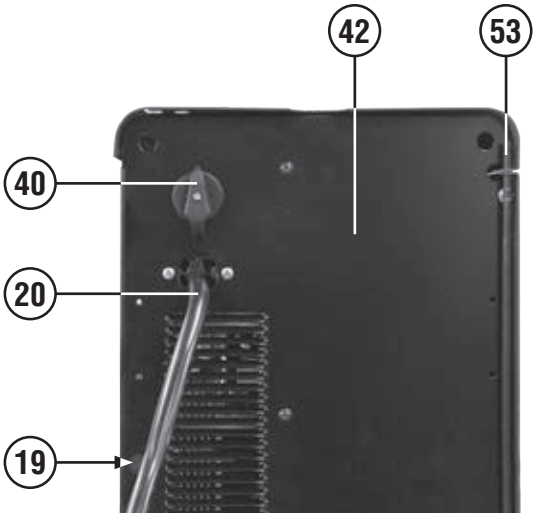

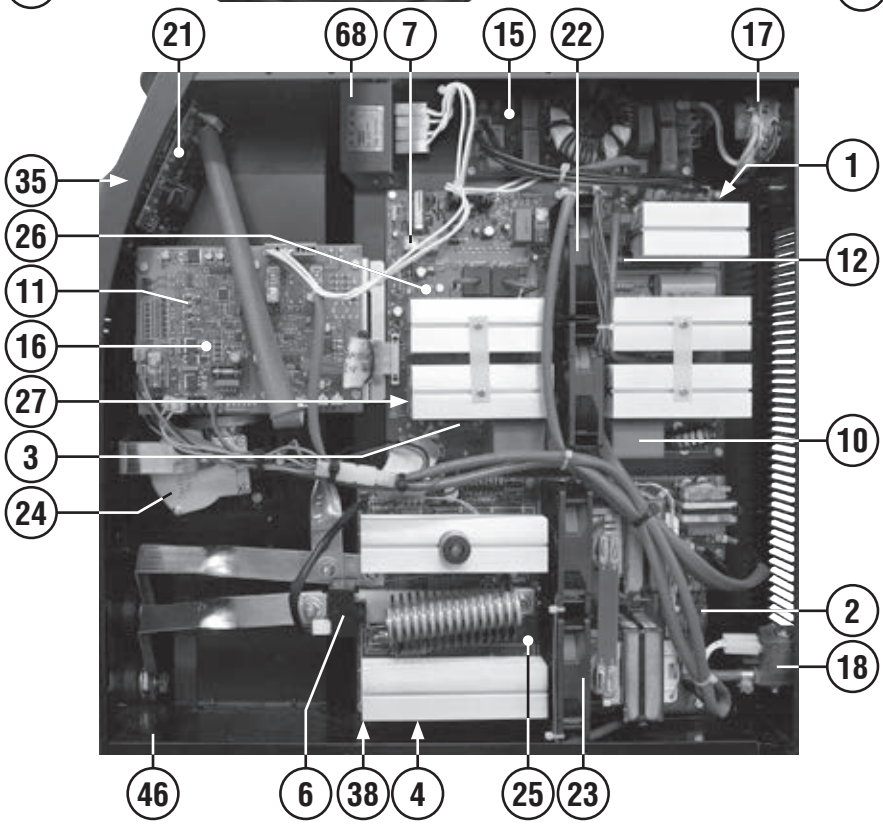

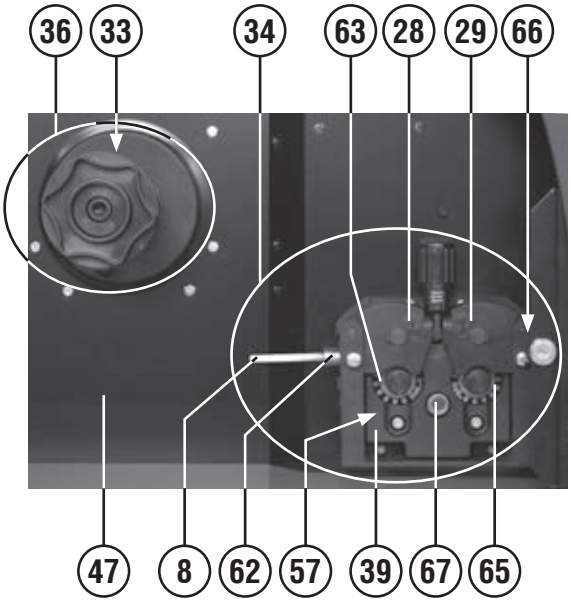

REF.	ELENCO PEZZI DI RICAMBIO PIECES DETACHEES SPARE PARTS LIST ERSATZTEILLISTE PIEZAS DE REPUESTO	CODICE CODE KODE
1	Ponte monofase Pont monophase Single phase bridge Einfasige brücke Puente monofasico	111017
2	Rele Relais Relais Relais Conectador	111583
3	Res. Met. 22r 5w 5% Res. Met. 22r 5w 5% Res. Met. 22r 5w 5% Res. Met. 22r 5w 5% Res. Met. 22r 5w 5%	111327
4	Res. Met. 4r7 5w 5% Res. Met. 4r7 5w 5% Res. Met. 4r7 5w 5% Res. Met. 4r7 5w 5% Res. Met. 4r7 5w 5%	111442
5	Kit ruote girevoli + freno d. 80mm Kit roues tournantes + frein d. 80mm Swivel wheels + brake kit d. 80mm Lenkrollen + bremse kit d. 80mm Kit ruedas giratorias + freno d. 80mm	804221
6	Sensore hall Capteur hall Sensor hall Messfuhler hall Sensor hall	113870
7	Rele' Relais Relais Relais Relais	116320
8	Kit guaina entrata motore Kit gaine entree moteur Gas hose kit Drahtfuehrungsseelekit Kit vaina guiadera alambre	990097
9	Kit supporto display Kit support display Display holder kit Display halterung kit Kit soporte display	981989
10	Condensatore Condensateur Condenser Kondensator Condensator	116882
11	Fusibile Fusible Fuse Sicherung Fusible	122434
12	Res. Met. 10r 2w 5% fuse Res. Met. 10r 2w 5% fuse Res. Met. 10r 2w 5% fuse Res. Met. 10r 2w 5% fuse Res. Met. 10r 2w 5% fuse	116962
13	Kit mantello Kit capot Cover kit Deckelkit Kit panel de cobertura	981740
14	Kit manopola encoder d.29 Kit poignee encoder d.29 Encoder knob kit d.29 Encodergriff kit d.29 Kit manija encoder d.29	980968
15	Kit scheda filtro ingresso Kit platine filtre input Input filter card kit Input filterkarte kit Kit tarjeta filtro input	980947
16	Kit scheda controllo Kit carte controle Control board kit Steuerungskarte kit Kit tarjeta control	982322
17	Commutatore Commutateur Switch Schalter Conmutador	122017
18	Elettrovalvola Electrovanne Electrovalve Elektroventil Electrovalvula	121800
19	Fusibile Fusible Fuse Sicherung Fusible	122437
20	Cavo alim. 4g4 2 m Cable alim. 4g4 2 m Mains cable 4g4 2 m Netzkabel 4g4 2 m Cable alim. 4g4 2 m	132206
21	Kit scheda pannello Kit platine frontal Front panel card kit Gerätefrontskarte kit Kit tarjeta frontal	982311
22	Ventilatore Ventilateur Fan Ventilator Ventilador	152269
23	Ventilatore Ventilateur Fan Ventilator Ventilador	152904
24	Motore Moteur Motor Motor Motor	153033
25	Scheda secondario Fiche secondaire Secondary pcb Sekundaertrafokarte Tarjeta secundario	981984
26	Scheda primario Fiche primaire Primary pcb Primaertrafokarte Tarjeta primario	981983
27	Kit igbt Kit igbt Kit igbt Kit igbt Kit igbt	981982
28	Ancora controrullino sinistra Ancre contre-galet gauche Left anchor for pressure roller Linker anker für gegenrolle Ancora izquierda para contra roldana	981929
29	Ancora controrullino destra Ancre contre-galet droit Right anchor for pressure roller Rechter anker für gegenrolle Ancora derecha para contra roldana	981930
30	Protezione attacco torcia Support isolant torche Torch connection protection Brennersisolierlager Sosten isolator antorcha	312105
31	Frontale superiore Partie frontal superieur Upper front panel Obere geraetefront Frontal superior	321137
32	Assieme manico Set poignee Handle set Handgriff set Set manija	321165
33	Distanziale per aspo Entretoise pour support bobine Reel spacer Distanzstueck Espàciador por aspa	321210
34	Traino 4 rulli Devidoir 4 rouleaux 4 Roll wirefeeder 4 Räder drahtvorschub Alimendator de hilo 4 rodillos	981928
35	Kit frontale Kit partie frontal Front panel kit Geraetefront kit Kit frontal	981815
36	Kit aspo 15kg Kit support bobine 15kg Reel kit 15kg Wickler kit 15kg Kit aspa 15kg	981703
37	Ruota fissa Roue fixe Fixed wheel Fixes rad Rueda firme	322200
38	Kit diodi Kit diodes Diode kit Diode kit Kit diodo	982298
39	Protezione Protecion Cover Deckel Proteccion	322814
40	Assieme manopola per commutatore Set poigne pour commutateur Switch knob set Umschaltergriff set Set manjia para conmutador	323101
41	Kit frontale inferiore Kit partie frontal inferieur Lower front panel kit Gerätefront unten kit Kit frontal inferior	982289
42	Retro Partie arriere Back panel Rueckseite Trasera	642653
43	Staffa portabombola Etrier porte-bouteille Bottle-holder bracket Kasten fuer flasche Estribo porta bombona	645673
44	Gancio appendi torcia Accrocheur torche Torch hook Haken fuer brenner Gancho fijacion antorcha	645704
45	Staffa asse ruote Bride axe roues Wheels axle braket Radachsebuegel Estribo eje ruedas	645715
46	Ripiano Surface Surface Deckel Plano	645747
47	Diaframma Diaphragme Diaphragm Diaphragma Diafragma	645835
48	Vano aspo Support bobine vain Reel space Wickler raum Espacio aspa	651240
49	Fianco dx Partie lateral Right side panel Rechtes seitenteil Panel derecho	651242
50	Fianco sx Partie lateral Side panel Linkes seitenteil Panel izquierdo	656222
51	Sportello Guichet Door Tuer Portezuela	656223
52	Asse ruote Axe roues Wheels axle Radachse Eje ruedas	681067
53	Perno sportello Pivot guichet Door pin Tuerzapfen Perno portezuela	691013
54	Toledo 400 pinza di massa 400a bl Toledo 400 pince de masse 400a bl Toledo 400 work clamp 400a bl Toledo 400 masseklemme 400a bl Toledo 400 pinza de masa 400a bl	802534
55	Presa atlas 50mmq Prise atlas 50mmq Socket atlas 50mmq Steckdose atlas 50mmq Enchufe atlas 50mmq	804197
56	Spina atlas 50mmq Fiche atlas 50mmq Plug atlas 50mmq Stecker atlas 50mmq Enchufe atlas 50mmq	804200
57	Rullino traino 4r ø0.6fe-0.8/0.9fe "p-k" Galet 4r ø 0.6fe-0.8/0.9fe "p-k" Feed roll 4r ø 0.6fe-0.8/0.9fe "p-k" Vorschubrolle 4r ø 0.6fe-0.8/0.9fe "p-k" Roldana 4r ø 0.6fe-0.8/0.9fe "p-k"	742576
58	Rullino traino 4r ø 0.8fe-1.0fe "p-k" Galet 4r ø 0.8fe-1.0fe "p-k" Feed roll 4r ø 0.8fe-1.0fe "p-k" Vorschubrolle 4r ø 0.8fe-1.0fe "p-k" Roldana 4r ø 0.8fe-1.0fe "p-k"	722227
59	Rullino traino 4r ø 1.2fe-1.6fe "p-k" Galet 4r ø 1.2fe-1.6fe "p-k" Feed roll 4r ø 1.2fe-1.6fe "p-k" Vorschubrolle 4r ø 1.2fe-1.6fe "p-k" Roldana 4r ø 1.2fe-1.6fe "p-k"	722241
60	Pinza di massa + cavo 35mmq 3m ax50 Pince de masse + cable 35mmq 3m ax50 Work clamp + cable 35mmq 3m ax50 Massezange + kabel 35mmq 3m ax50 Pinca de masa +cable 35mmq 3m pinca ax50	804217
61	Attacco torcia Attelage torche Torch connection Brenneranschluss Enganche soplete	723229
62	Entrata guidafilo Entree guide fil Wire guide inlet Drahtfuehrungsseeleeingang Entrata vaina guiadera alambre	742064
63	Adattatore Adapteur Adapter Zahnrad Adaptador	742166

REF.	ELENCO PEZZI DI RICAMBIO PIECES DETACHEES SPARE PARTS LIST ERSATZTEILLISTE PIEZAS DE REPUESTO	CODICE CODE KODE
64	Mt36 torcia mig 3m Mt36 torche mig 3m Mt36 mig torch 3m Mt36 mig brenner 3m Mt36 antorcha mig 3m	742186
65	Ingranaggio motore Engrenage motor Motor drive gear Motorszahnrad Engranaje motor	742348
66	Tubo capillare ø 2x5 Tuyau capillaire ø 2x5 Wire conduit ø 2x5 Kapillarrohr ø 2x5 Tubo capilar ø 2x5	742365
67	Ingranaggio Engrenages Gears Zahnrad Engranaje	742590
68	Kit autotrasfo Kit autotrasfo Autotrasfo kit Autotrasfo kit Kit autotrasfo	981278

REF.	ELENCO PEZZI DI RICAMBIO PIECES DETACHEES SPARE PARTS LIST ERSATZTEILLISTE PIEZAS DE REPUESTO	CODICE CODE KODE

REF.	ELENCO PEZZI DI RICAMBIO PIECES DETACHEES SPARE PARTS LIST ERSATZTEILLISTE PIEZAS DE REPUESTO	CODICE CODE KODE

Schema elettrico, Schéma électrique, Diagram, Schaltplan, Esquema de conexiones.

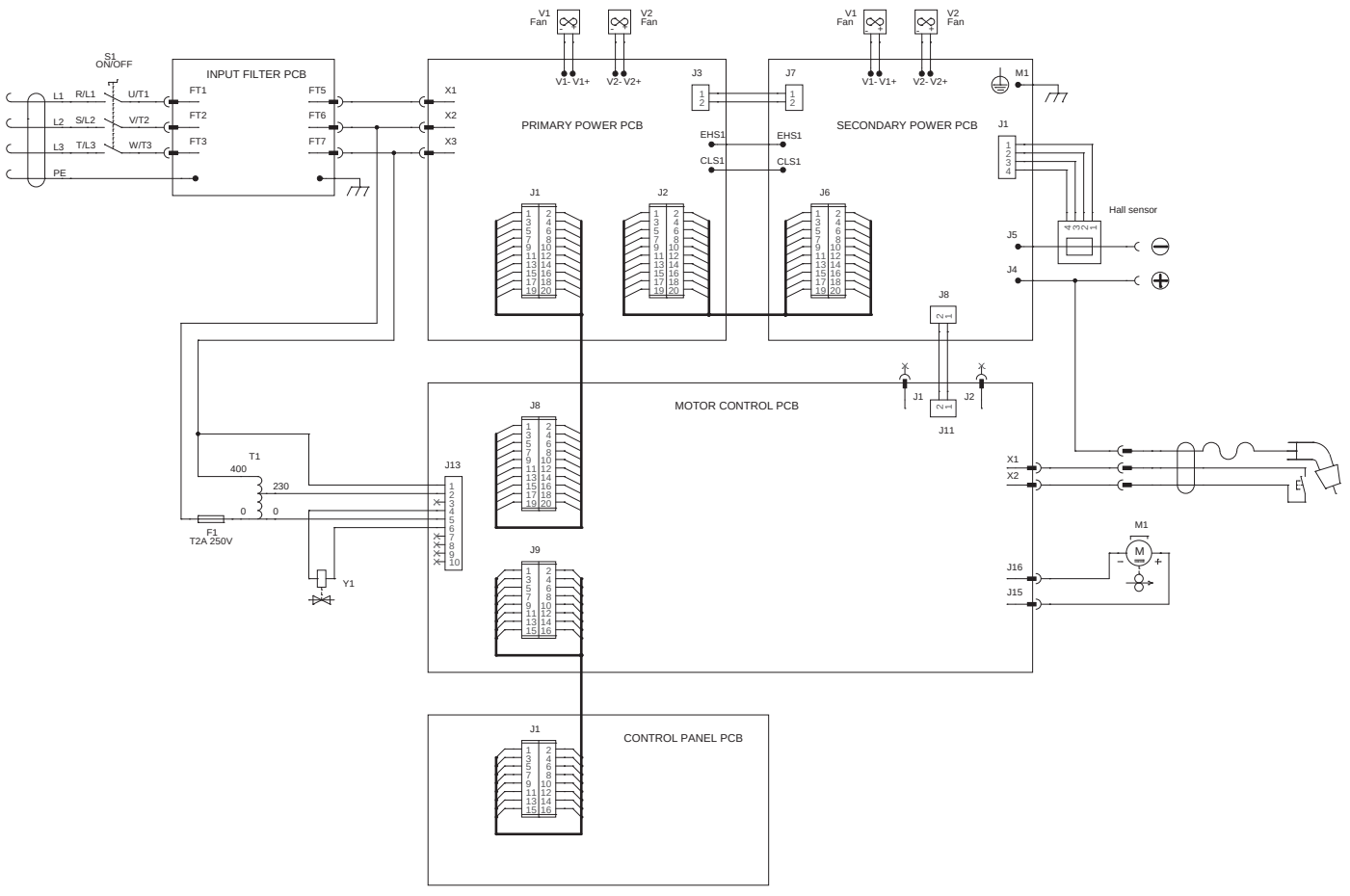

Esploso torcia, Dessin torche, Torch drawing, Schlauchpaket - Explosionszeichnung, Diseño seccionado antorcha.

742186 3m
742187 4m
742188 5m

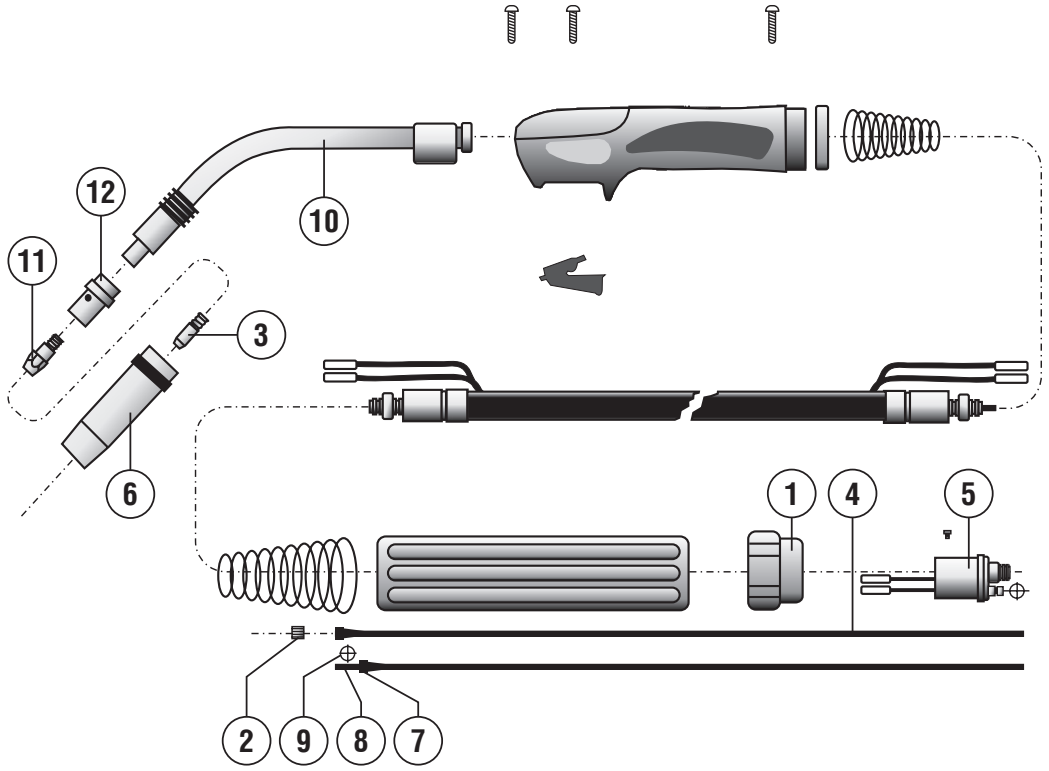

REF.	ELENCO PEZZI RICAMBIO TORCIA LISTE PIECES DETACHEES TORCHE SPARE PARTS LIST TORCH ERSATZTEILLISTE SCLAUCHPAKET PIEZAS DE REPUESTO ANTORCHA	CODICE CODE KODE
1	Ghiera fissaggio Embout fixage Ring nut Nutmutter Virola por fiyacion	722007
2	Dado fissaggio guaina Ecrou fixage gaine Liner nut Befestigungsmutter Dado por fiyacion vaina	722013
3	Tubetto di contatto d. 1,6 Mm al/flux m6 Tube contact d. 1,6 Mm al/flux m6 Contact tip d. 1,6 Mm al/flux m6 Kontaktdüse d. 1,6 Mm al/flux m6 Tubito de contacto d. 1,6 Mm al/flux m6	722818
3	Tubetto di contatto d. 1,6 Mm fe Tube contact d. 1,6 Mm fe Contact tip d. 1,6 Mm fe Kontaktroehrchen d. 1,6 Mm fe Tubito de contacto d. 1,6 Mm fe	722797
3	Tubetto di contatto d. 1,2 Mm fe Tube contact d. 1,2 Mm fe Contact tip d. 1,2 Mm fe Kontaktdüse d. 1,2 Mm fe Tubito de contacto d. 1,2 Mm fe	722682
3	Tubetto di contatto d. 1 Mm fe m6 l=28mm Tube contact d. 1 Mm fe m6 l=28mm Contact tip d. 1 Mm fe m6 l=28mm Kontaktdüse d. 1 Mm fe m6 l=28mm Tubito de contacto d. 1 Mm fe m6 l=28mm	722681
3	Tubetto di contatto d. 0,8 Mm m6 Tube contact d. 0,8 Mm m6 Contact tip d. 0,8 Mm m6 Kontaktdüse d. 0,8 Mm m6 Tubito de contacto d. 0,8 Mm m6	722680
3	Tubetto di contatto d. 1,2 Mm al/flux m6 Tube contact d. 1,2 Mm al/flux m6 Contact tip d. 1,2 Mm al/flux m6 Kontaktdüse d. 1,2 Mm al/flux m6 Tubito de contacto d. 1,2 Mm al/flux m6	722553
3	Tubetto di contatto d. 1 Mm al/flux m6 Tube contact d. 1 Mm al/flux m6 Contact tip d. 1 Mm al/flux m6 Kontaktdüse d. 1 Mm al/flux m6 Tubito de contacto d. 1 Mm al/flux m6	722552
3	Tubetto di contatto d. 0,6 Mm fe Tube contact d. 0,6 Mm fe Contact tip d. 0,6 Mm fe Kontaktdüse d. 0,6 Mm fe Tubito de contacto d. 0,6 Mm fe	722415
4	Guaina guidafilo ø1.0-1.2 3m rossa Gaine pour fil ø1.0-1.2 3m rouge Wire guide hose ø1.0-1.2 3m red Drahtführungsseele ø1.0-1.2 3m rot Vaina guia hilo ø1.0-1.2 3m roja	722689
4	Guaina guidafilo ø0.6-0.8 3m blu Gaine pour fil ø0.6-0.8 3m bleu Wire guide hose ø0.6-0.8 3m blue Drahtführungsseele ø0.6-0.8 3m blue Vaina guia hilo ø0.6-0.8 3m blue	722437

REF.	ELENCO PEZZI RICAMBIO TORCIA LISTE PIECES DETACHEES TORCHE SPARE PARTS LIST TORCH ERSATZTEILLISTE SCLAUCHPAKET PIEZAS DE REPUESTO ANTORCHA	CODICE CODE KODE
4	Guaina guidafilo ø1.2-1.6 4m al Gaine pour fil ø1.2-1.6 4m al Wire guide hose ø1.2-1.6 4m al Drahtführungsseele ø1.2-1.6 4m al Vaina guia hilo ø1.2-1.6 4m al	742811
4	Guaina guidaf. Ø1.0-1.2 4m al Gaine pour fil ø1.0-1.2 4m al Wire guide hose ø1.0-1.2 4m al Drahtführungsseele ø1.0-1.2 4m al Vaina guia hilo ø1.0-1.2 4m al	742812
5	Corpo torcia Corp de torche Torch assy Brennerskörper Enganche antorcha	722441
6	Ugello conico mt36 Buse conique mt36 Conical nozzle mt36 Konische düse mt36 Inyector conico mt36	722792
6	Ugello testa fine mt36 Buse a tete fine mt36 Thin headed nozzle mt36 Verengte düse mt36 Inyector cabeza fina mt36	722793
6	Ugello puntatura Buse pour pointage Spot welding nozzle Punktschweissdüse Inyector por puntos	722794
7	Nipples ferma guaina Nipples serre gaine Wire guide locking nipples Drahtseeleklemmnipples Nipples de bloqueo vaina	722598
7	Nipples ferma guaina Nipples serre gaine Wire guide locking nipples Drahtseeleklemmnipples Nipples de bloqueo vaina	722599
8	Tubetto ferma guaina Tuyau serre gaine Wire guide locking tube Drahtseeleklemmrohr Tubito de bloqueo vaina	722600
9	Anello or Bague or Or ring Or ring Anillo or	722601
9	Anello or Anneau or Or ring Or ring Anillo or	722606
10	Lancia mt36 Lance mt36 Swan neck mt36 Brennerhals mt36 Encorvado mt36	722788

REF.	ELENCO PEZZI RICAMBIO TORCIA LISTE PIECES DETACHEES TORCHE SPARE PARTS LIST TORCH ERSATZTEILLISTE SCLAUCHPAKET PIEZAS DE REPUESTO ANTORCHA	CODICE CODE KODE
11	Supporto tubetto contatto mt36 Support tube contact mt36 Contact tip holder mt36 Kontaktröhrchen träger mt36 Sosten tubito de contacto mt36	722789
12	Diffusore gas isolante mt 36 Diffuseur gaz isolant mt 36 Insulating gas diffuser mt 36 Isolierte gas diffusor mt 36 Difusor gas aislante mt 36	722791

ELENCO PEZZI DI RICAMBIO
LISTE PIECES DETACHEES
SPARE PARTS LIST
ERSATZTEILLISTE
PIEZAS DE REPUESTO

ELECTROMIG 450 SYNERGIC

TELWIN

Esploso macchina, Dessin appareil, Machine drawing, Explosions Zeichnung des Geräts, Diseño seccionado maquina.

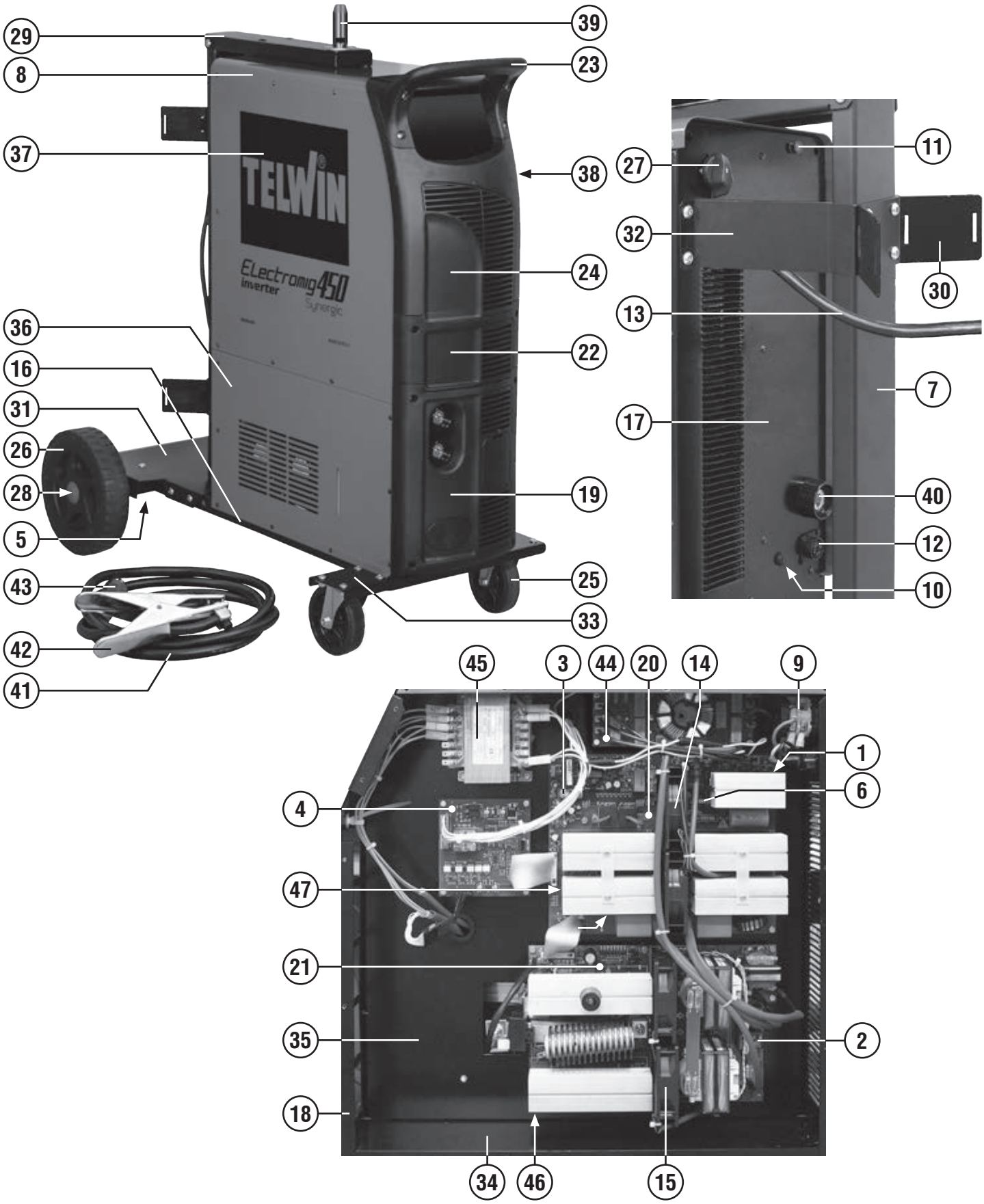

REF.	ELENCO PEZZI DI RICAMBIO PIECES DETACHEES SPARE PARTS LIST ERSATZTEILLISTE PIEZAS DE REPUESTO	CODICE CODE KODE
1	Ponte monofase Pont monophase Single phase bridge Einfasige brücke Puente monofasico	111017
2	Rele Relais Relais Relais Conectador	111583
3	Rele' Relais Relais Relais Relais	116320
4	Kit scheda controllo Kit carte controle Control board kit Steuerungskarte kit Kit tarjeta control	982287
5	Kit staffa ruote Kit bride roues Wheels braket kit Rad buegel kit Kit estribo ruedas	982063
6	Res. Met. 10r 2w 5% fuse Res. Met. 10r 2w 5% fuse Res. Met. 10r 2w 5% fuse Res. Met. 10r 2w 5% fuse Res. Met. 10r 2w 5% fuse	116962
7	Kit colonna Kit colonne Column kit Spalte kit Kit columna	982062
8	Kit mantello Kit capot Cover kit Deckel kit Kit panel de cobertura	982061
9	Commutatore Commutateur Switch Schalter Conmutador	122017
10	Fusibile Fusible Fuse Sicherung Fusible	122437
11	Lampada Temoin lumineux Lamp Kontrollampe Lamparilla de control	122709
12	Cablaggio II° Cable II° Cable II° Kabel II° Cable II°	125155
13	Cavo alim. 4g4 2 m Cable alim. 4g4 2 m Mains cable 4g4 2 m Netzkabel 4g4 2 m Cable alim. 4g4 2 m	132206
14	Ventilatore Ventilateur Fan Ventilator Ventilador	152269
15	Ventilatore Ventilateur Fan Ventilator Ventilador	152904
16	Kit fondo Kit chassis Bottom kit Bodenteil kit Kit fondo	982060

REF.	ELENCO PEZZI DI RICAMBIO PIECES DETACHEES SPARE PARTS LIST ERSATZTEILLISTE PIEZAS DE REPUESTO	CODICE CODE KODE
17	Kit retro Kit partie arriere Back panel kit Rückseite kit Kit trasera	982286
18	Kit frontale Kit partie frontal Front panel kit Geraetefront kit Kit frontal	982058
19	Kit frontale inferiore Kit partie frontal inferieur Lower front panel kit Gerätefront unten kit Kit frontal inferior	982289
20	Scheda primario Fiche primaire Primary pcb Primaertrafokarte Tarjeta primario	981983
21	Scheda secondario Fiche secondaire Secondary pcb Sekundaertrafokarte Tarjeta secundario	981984
22	Frontale Partie frontal Front panel Gerätefront Frontal	321241
23	Manico Poignee Handle Handgriff Manija	321279
24	Frontale superiore Partie frontal superieur Upper front panel Obere gerätefront Frontal superior	321320
25	Ruota con supporto Roue + support tournant Wheel + swivel support Rad + drehbarerhalter Rueda + sosten giratorio	321398
26	Ruota Roue Wheel Rad Rueda	321389
27	Assieme manopola per commutatore Set poigne pour commutateur Switch knob set Umschaltergriff set Set manjia para conmutador	323101
28	Asse per ruote Axes pour roue Wheels axle Raederachse Eje por rueda	422940
29	Braccio Brace Arm Arm Brazo	641093
30	Staffa portabombola Etrier porte-bouteille Bottle-holder bracket Kasten für flasche Estribo porta bombona	641095
31	Supporto bombola Support bouteille Bottle holder Flaschenhalter Sosten bombona	641096
32	Supporto colonna Support colonne Column holder Säule halterung Soporte columna	641098

REF.	ELENCO PEZZI DI RICAMBIO PIECES DETACHEES SPARE PARTS LIST ERSATZTEILLISTE PIEZAS DE REPUESTO	CODICE CODE KODE
33	Staffa supporto ruote Bride suport roues Wheel holding bracket Bügel f. Räderhalterung Estribo sosten ruedas	641099
34	Ripiano Surface Surface Deckel Plano	645863
35	Diaframma Diaphragme Diaphragm Diaphragma Diafragma	645864
36	Fianco destro Partie laterale droit Side panel right Seitenblech recht Panel derecho	656206
37	Fianco destro Partie lateral droite Right side panel Rechts seitenblech Flanco derecho	656231
38	Fianco sinistro Partie lateral gauche Left side panel Links seitenblech Flanco isquierdo	656232
39	Perno Goujon Pin Zapfen Perno	689037
40	Presa atlas 70/95mmq Prise atlas 70/95mmq Socket atlas 70/95mmq Steckdose atlas 70/95mmq Enchufe atlas 70/95mmq	804198
41	Pinza di massa + cavo 35mmq 3m ax50 Pince de masse + cable 35mmq 3m ax50 Work clamp + cable 35mmq 3m ax50 Massezange + kabel 35mmq 3m ax50 Pinca de masa +cable 35mmq 3m pinca ax50	804217
42	Toledo 400 pinza di massa 400a bl Toledo 400 pince de masse 400a bl Toledo 400 work clamp 400a bl Toledo 400 masseklemme 400a bl Toledo 400 pinza de masa 400a bl	802534
43	Spina atlas 50mmq Fiche atlas 50mmq Plug atlas 50mmq Stecker atlas 50mmq Enchufe atlas 50mmq	804200
44	Kit scheda filtro ingresso Kit platine filtre input Input filter card kit Input filterkarte kit Kit tarjeta filtro input	980947
45	Kit trasformatore ausiliario Kit transformateur auxiliaire Auxiliary transformer kit Hilfstransformatorkit Kit transformador auxiliar	980958
46	Kit diodi Kit diodes Diode kit Diode kit Kit diodo	981632
47	Kit igbt Kit igbt Kit igbt Kit igbt Kit igbt	981982

Schema elettrico, Schéma électrique, Diagram, Schaltplan, Esquema de conexiones.

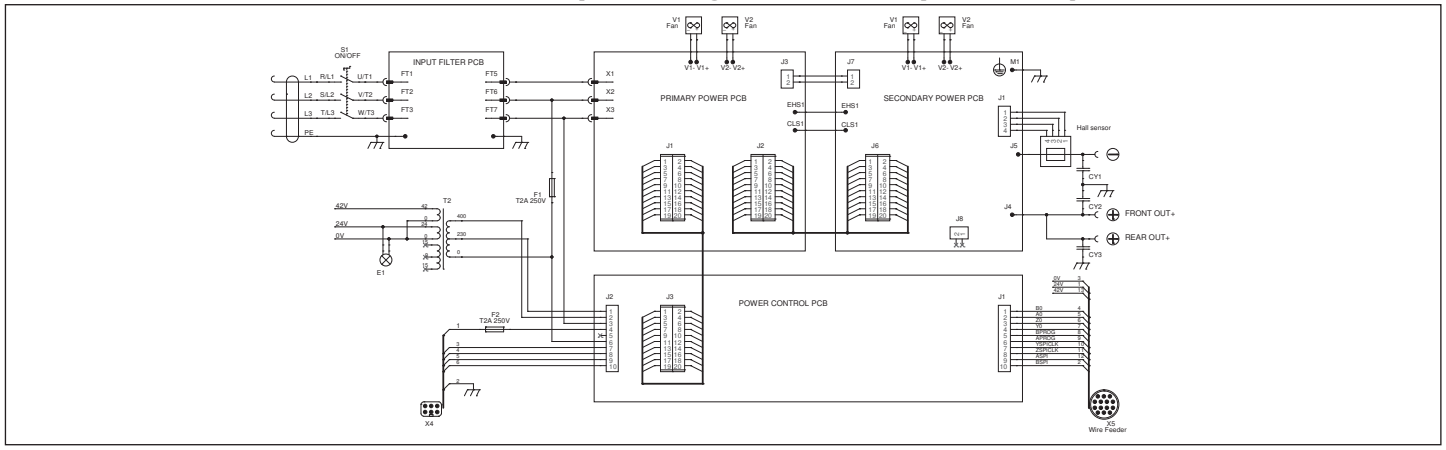

Esploso torcia, Dessin torche, Torch drawing, Schlauchpaket - Explosionszeichnung, Diseño seccionado antorcha.

742186 3m
742187 4m
742188 5m

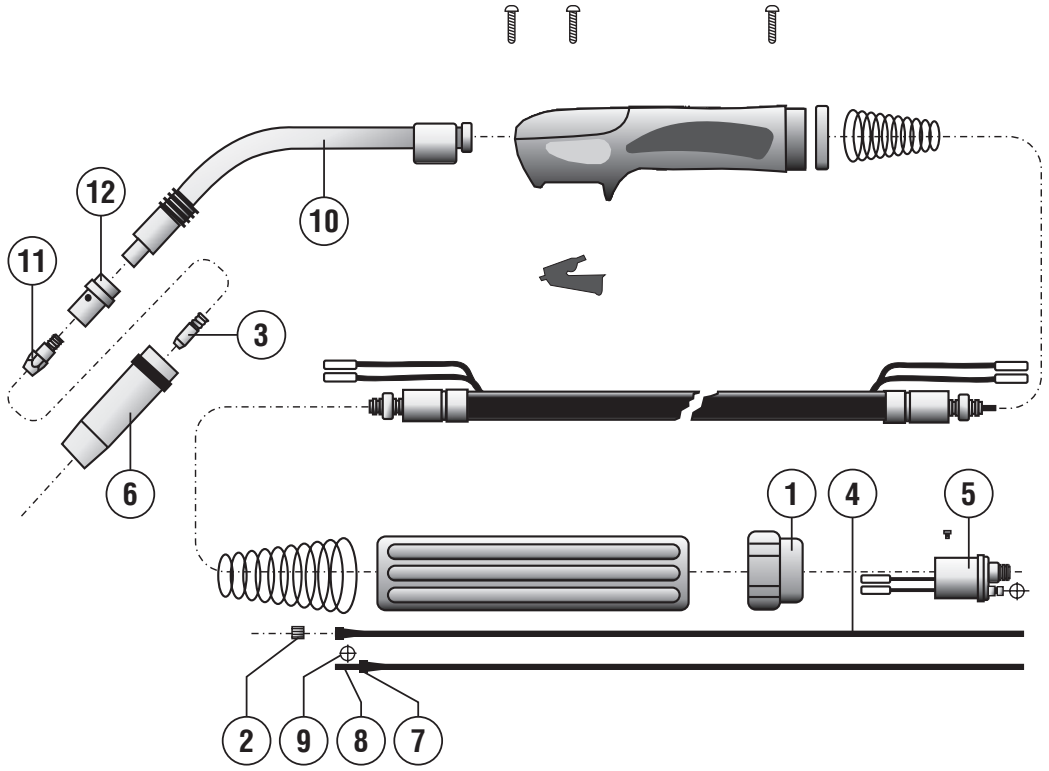

REF.	ELENCO PEZZI RICAMBIO TORCIA LISTE PIECES DETACHEES TORCHE SPARE PARTS LIST TORCH ERSATZTEILLISTE SCLAUCHPAKET PIEZAS DE REPUESTO ANTORCHA	CODICE CODE KODE
1	Ghiera fissaggio Embout fixage Ring nut Nutmutter Virola por fiyacion	722007
2	Dado fissaggio guaina Ecrou fixage gaine Liner nut Befestigungsmutter Dado por fiyacion vaina	722013
3	Tubetto di contatto d. 1,6 Mm al/flux m6 Tube contact d. 1,6 Mm al/flux m6 Contact tip d. 1,6 Mm al/flux m6 Kontaktdüse d. 1,6 Mm al/flux m6 Tubito de contacto d. 1,6 Mm al/flux m6	722818
3	Tubetto di contatto d. 1,6 Mm fe Tube contact d. 1,6 Mm fe Contact tip d. 1,6 Mm fe Kontaktroehrchen d. 1,6 Mm fe Tubito de contacto d. 1,6 Mm fe	722797
3	Tubetto di contatto d. 1,2 Mm fe Tube contact d. 1,2 Mm fe Contact tip d. 1,2 Mm fe Kontaktdüse d. 1,2 Mm fe Tubito de contacto d. 1,2 Mm fe	722682
3	Tubetto di contatto d. 1 Mm fe m6 l=28mm Tube contact d. 1 Mm fe m6 l=28mm Contact tip d. 1 Mm fe m6 l=28mm Kontaktdüse d. 1 Mm fe m6 l=28mm Tubito de contacto d. 1 Mm fe m6 l=28mm	722681
3	Tubetto di contatto d. 0,8 Mm m6 Tube contact d. 0,8 Mm m6 Contact tip d. 0,8 Mm m6 Kontaktdüse d. 0,8 Mm m6 Tubito de contacto d. 0,8 Mm m6	722680
3	Tubetto di contatto d. 1,2 Mm al/flux m6 Tube contact d. 1,2 Mm al/flux m6 Contact tip d. 1,2 Mm al/flux m6 Kontaktdüse d. 1,2 Mm al/flux m6 Tubito de contacto d. 1,2 Mm al/flux m6	722553
3	Tubetto di contatto d. 1 Mm al/flux m6 Tube contact d. 1 Mm al/flux m6 Contact tip d. 1 Mm al/flux m6 Kontaktdüse d. 1 Mm al/flux m6 Tubito de contacto d. 1 Mm al/flux m6	722552
3	Tubetto di contatto d. 0,6 Mm fe Tube contact d. 0,6 Mm fe Contact tip d. 0,6 Mm fe Kontaktdüse d. 0,6 Mm fe Tubito de contacto d. 0,6 Mm fe	722415
4	Guaina guidafilo ø1.0-1.2 3m rossa Gaine pour fil ø1.0-1.2 3m rouge Wire guide hose ø1.0-1.2 3m red Drahtführungsseele ø1.0-1.2 3m rot Vaina guia hilo ø1.0-1.2 3m roja	722689
4	Guaina guidafilo ø0.6-0.8 3m blu Gaine pour fil ø0.6-0.8 3m bleu Wire guide hose ø0.6-0.8 3m blue Drahtführungsseele ø0.6-0.8 3m blue Vaina guia hilo ø0.6-0.8 3m blue	722437

REF.	ELENCO PEZZI RICAMBIO TORCIA LISTE PIECES DETACHEES TORCHE SPARE PARTS LIST TORCH ERSATZTEILLISTE SCLAUCHPAKET PIEZAS DE REPUESTO ANTORCHA	CODICE CODE KODE
4	Guaina guidafilo ø1.2-1.6 4m al Gaine pour fil ø1.2-1.6 4m al Wire guide hose ø1.2-1.6 4m al Drahtführungsseele ø1.2-1.6 4m al Vaina guia hilo ø1.2-1.6 4m al	742811
4	Guaina guidaf. Ø1.0-1.2 4m al Gaine pour fil ø1.0-1.2 4m al Wire guide hose ø1.0-1.2 4m al Drahtführungsseele ø1.0-1.2 4m al Vaina guia hilo ø1.0-1.2 4m al	742812
5	Corpo torcia Corp de torche Torch assy Brennerskörper Enganche antorcha	722441
6	Ugello conico mt36 Buse conique mt36 Conical nozzle mt36 Konische düse mt36 Inyector conico mt36	722792
6	Ugello testa fine mt36 Buse a tete fine mt36 Thin headed nozzle mt36 Verengte düse mt36 Inyector cabeza fina mt36	722793
6	Ugello puntatura Buse pour pointage Spot welding nozzle Punktschweissdüse Inyector por puntos	722794
7	Nipples ferma guaina Nipples serre gaine Wire guide locking nipples Drahtseeleklemmnipples Nipples de bloqueo vaina	722598
7	Nipples ferma guaina Nipples serre gaine Wire guide locking nipples Drahtseeleklemmnipples Nipples de bloqueo vaina	722599
8	Tubetto ferma guaina Tuyau serre gaine Wire guide locking tube Drahtseeleklemmrohr Tubito de bloqueo vaina	722600
9	Anello or Bague or Or ring Or ring Anillo or	722601
9	Anello or Anneau or Or ring Or ring Anillo or	722606
10	Lancia mt36 Lance mt36 Swan neck mt36 Brennerhals mt36 Encorvado mt36	722788

REF.	ELENCO PEZZI RICAMBIO TORCIA LISTE PIECES DETACHEES TORCHE SPARE PARTS LIST TORCH ERSATZTEILLISTE SCLAUCHPAKET PIEZAS DE REPUESTO ANTORCHA	CODICE CODE KODE
11	Supporto tubetto contatto mt36 Support tube contact mt36 Contact tip holder mt36 Kontaktröhrchen träger mt36 Sosten tubito de contacto mt36	722789
12	Diffusore gas isolante mt 36 Diffuseur gaz isolant mt 36 Insulating gas diffuser mt 36 Isolierte gas diffusor mt 36 Difusor gas aislante mt 36	722791

Esploso torcia, Dessin torche, Torch drawing, Schlauchpaket - Explosionszeichnung, Diseño seccionado antorcha.

- Esploso torcia R.A. (Raffreddata ad acqua)
- Dessin torche R.A. (Refroide par eau)
- Drawing sectionalized torch R.A. (Water cooled)
- Zerlegte Zeichnung Schlauchpaket R.A. (Wasserkuhlung)
- Diseno seccionado antorcha R.A. (Enfriadar a agua)

722625 3m
742821 4m
722683 5m

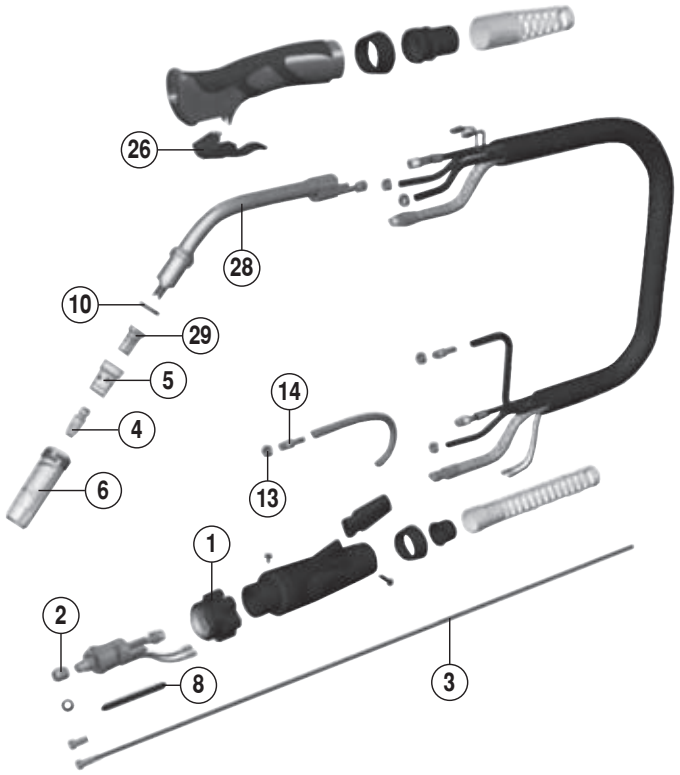

REF.	ELENCO PEZZI RICAMBIO TORCIA LISTE PIECES DETACHEES TORCHE SPARE PARTS LIST TORCH ERSATZTEILLISTE SCLAUCHPAKET PIEZAS DE REPUESTO ANTORCHA	CODICE CODE KODE
1	Ghiera fissaggio Embout fixage Ring nut Nutmutter Virola por fiyacion	722007
2	Dado fissaggio guaina Ecrou fixage gaine Liner nut Befestigungsmutter Dado por fiyacion vaina	722013
3	Guaina guidafilo ø1-1,2 tefl/graf.+Term. Gaine pour fil ø1-1,2 tefl/graf.+Term. Wire guide hose ø1-1,2 tefl/graf.+Term. Drahtführungsseele ø1-1,2 tefl/graf.+Te Vaina guia hilo ø1-1,2 tefl/graf.+Term.	742812
3	Guaina guidafilo ø 1,2-1,6 mm 3 m Gaine pour fil ø 1,2-1,6 mm 3 m Wire guide hose ø 1,2-1,6 mm 3 m Drahtführungsseele ø 1,2-1,6 mm 3 m Vaina guia hilo ø 1,2-1,6 mm 3 m	722588
3	Guaina guidafilo ø 1,0-1,2 mm 3 m Gaine pour fil ø 1,0-1,2 mm 3 m Wire guide hose ø 1,0-1,2 mm 3 m Drahtführungsseele ø 1,0-1,2 mm 3 m Vaina guia hilo ø 1,0-1,2 mm 3 m	722590
3	Guaina guidafilo ø 1,6-2,0 al teflon Gaine pour fil ø 1,6-2,0 al teflon Wire guide hose ø 1,6-2,0 al teflon Drahtführungsseele ø 1,6-2,0 al teflon Vaina guia hilo ø 1,6-2,0 al teflon	742811
3	Guaina g.F. D.2-2,4 Mt.3 Gaine guide fil d.2-2,4 M3 Wire guide hose d.2-2,4 M3 Drahtfuehrungsseele d.2-2,4 M3 Vaina guiadera alambre d. 2-2,4 M3	722820
4	Tubetto di contatto d. 0,8 Mm m8 Tube contact d. 0,8 Mm m8 Contact tip d. 0,8 Mm m8 Kontaktdüse d. 0,8 Mm m8 Tubito de contacto d. 0,8 Mm m8	722581
4	Tubetto di contatto d. 1 Mm Tube contact d. 1 Mm Contact tip d. 1 Mm Kontaktdüse d. 1 Mm Tubito de contacto d. 1 Mm	722582
4	Tubetto di contatto d. 1,2 Mm Tube contact d. 1,2 Mm Contact tip d. 1,2 Mm Kontaktdüse d. 1,2 Mm Tubito de contacto d. 1,2 Mm	722583
4	Tubetto di contatto ø 2,4 mm Tube contact ø 2,4 mm Contact tip ø 2,4 mm Kontaktdüse ø 2,4 mm Tubito de contacto ø 2,4 mm	722773
4	Tubetto contatto d.2,0 Tube contact d.2,0 Contact tip d.2,0 Kontaktroehrchen d.2,0 Tubito de contacto d.2,0	722586

REF.	ELENCO PEZZI RICAMBIO TORCIA LISTE PIECES DETACHEES TORCHE SPARE PARTS LIST TORCH ERSATZTEILLISTE SCLAUCHPAKET PIEZAS DE REPUESTO ANTORCHA	CODICE CODE KODE
4	Tubetto di contatto d. 1,6 Mm Tube contact d. 1,6 Mm Contact tip d. 1,6 Mm Kontaktroehrchen d. 1,6 Mm Tubito de contacto d. 1,6 Mm	722587
4	Tubetto di contatto d. 2 Mm al/flux Tube contact d. 2 Mm al/flux Contact tip d. 2 Mm al/flux Kontaktdüse d. 2 Mm al/flux Tubito de contacto d. 2 Mm al/flux	722772
4	Tubetto di contatto d. 1,6 Mm al/flux m8 Tube contact d. 1,6 Mm al/flux m8 Contact tip d. 1,6 Mm al/flux m8 Kontaktdüse d. 1,6 Mm al/flux m8 Tubito de contacto d. 1,6 Mm al/flux m8	722771
4	Tubetto di contatto d. 1,2 Mm al/flux m8 Tube contact d. 1,2 Mm al/flux m8 Contact tip d. 1,2 Mm al/flux m8 Kontaktdüse d. 1,2 Mm al/flux m8 Tubito de contacto d. 1,2 Mm al/flux m8	722770
4	Tubetto di contatto d. 1,6 Mm(cu cr zr) Tube contact d. 1,6 Mm (cu cr zr) Contact tip d. 1,6 Mm (cu cr zr) Kontaktdüse d. 1,6 Mm (cu cr zr) Tubito de contacto d. 1,6 Mm (cu cr zr)	742161
4	Tubetto di contatto d. 1,2 Mm(cu cr zr) Tube contact d. 1,2 Mm (cu cr zr) Contact tip d. 1,2 Mm (cu cr zr) Kontaktdüse d. 1,2 Mm (cu cr zr) Tubito de contacto d. 1,2 Mm (cu cr zr)	742160
4	Tubetto di contatto d. 1 Mm (cu cr zr) Tube contact d. 1 Mm (cu cr zr) Contact tip d. 1 Mm (cu cr zr) Kontaktdüse d. 1 Mm (cu cr zr) Tubito de contacto d. 1 Mm (cu cr zr)	742159
4	Tubetto di contatto d. 1 Mm al/flux m8 Tube contact d. 1 Mm al/flux m8 Contact tip d. 1 Mm al/flux m8 Kontaktdüse d. 1 Mm al/flux m8 Tubito de contacto d. 1 Mm al/flux m8	722769
5	Diffusore gas isolante mt 501 Diffuseur gaz isolant mt 501 Insulating gas diffuser mt 501 Isolierte gas diffusor mt 501 Difusor gas aislante mt 501	722593
6	Ugello puntatura Buse pointage Spot welding nozzle Punktschweissduese Inyector por puntos	722594
6	Ugello cilindrico mt500 Buse cylindrique mt500 Cylindrical nozzle mt500 Zylindrische düse mt500 Inyector cilindrico mt500	722595
6	Ugello conico mt500 Buse conique mt500 Conical nozzle mt500 Konische düse mt500 Inyector conico mt500	722585

REF.	ELENCO PEZZI RICAMBIO TORCIA LISTE PIECES DETACHEES TORCHE SPARE PARTS LIST TORCH ERSATZTEILLISTE SCLAUCHPAKET PIEZAS DE REPUESTO ANTORCHA	CODICE CODE KODE
8	Tubetto ferma guaina Tuyau serre gaine Wire guide locking tube Drahtseeleklemmrohr Tubito de bloqueo vaina	722600
10	Rondella isolante Rondelle isolante Insulating washer Isolierschraube Arandela aislante	722603
13	Fascetta Collier Hose ring Schelle Cintura	232114
14	Riduzione innesti rapidi Reducteur Reduction Schnelle kupplungreduktion Reduccion inyertos rapidos	722608
26	Pulsante Poussoir Pushbutton Druckknopf Pulsador	722677
28	Lancia mt500 Lance mt500 Swan neck mt500 Brennerhals mt500 Encorvado mt500	722708
29	Supporto tubetto contatto mt500 Support tube contact mt500 Contact tip holder mt500 Kontaktröhrchen träger mt500 Sosten tubito de contacto mt500	722709

ELENCO PEZZI DI RICAMBIO
LISTE PIECES DETACHEES
SPARE PARTS LIST
ERSATZTEILLISTE
PIEZAS DE REPUESTO

TE 450 AIR WIREFEEDER

Esploso macchina, Dessin appareil, Machine drawing, Explosions Zeichnung des Geräts, Diseño seccionado maquina.

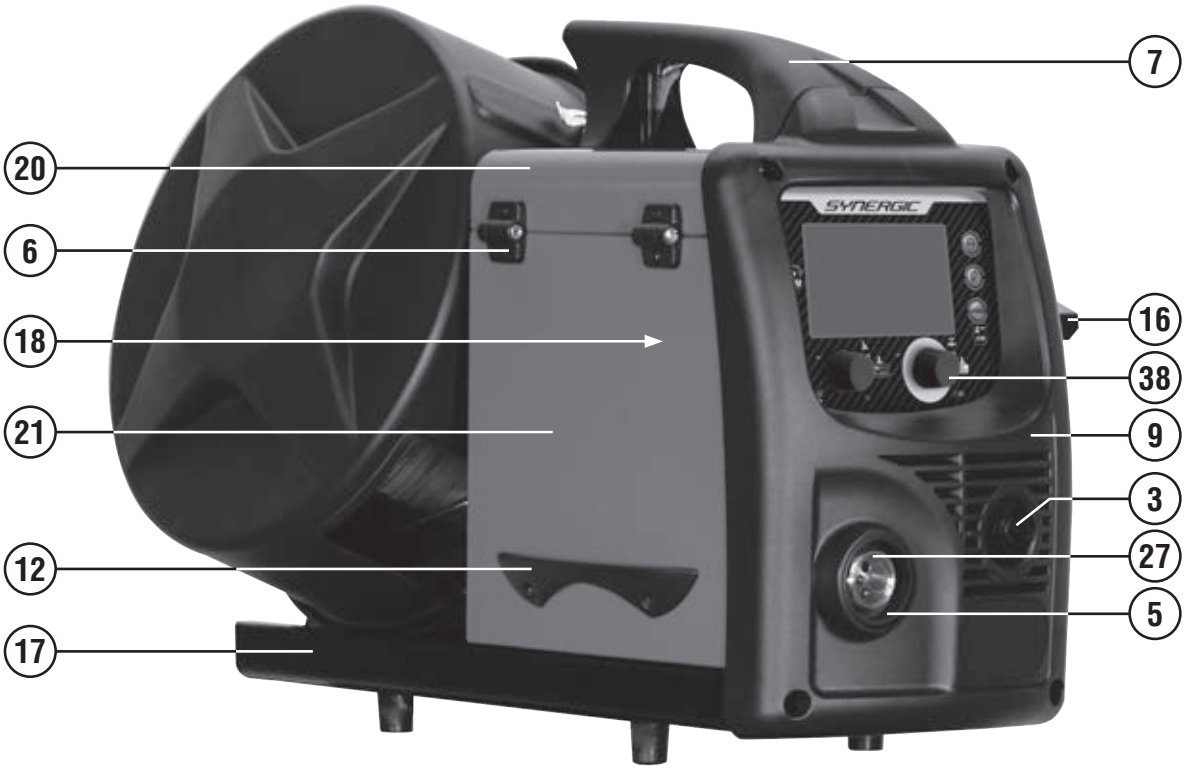

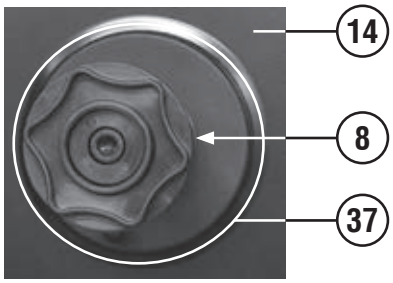

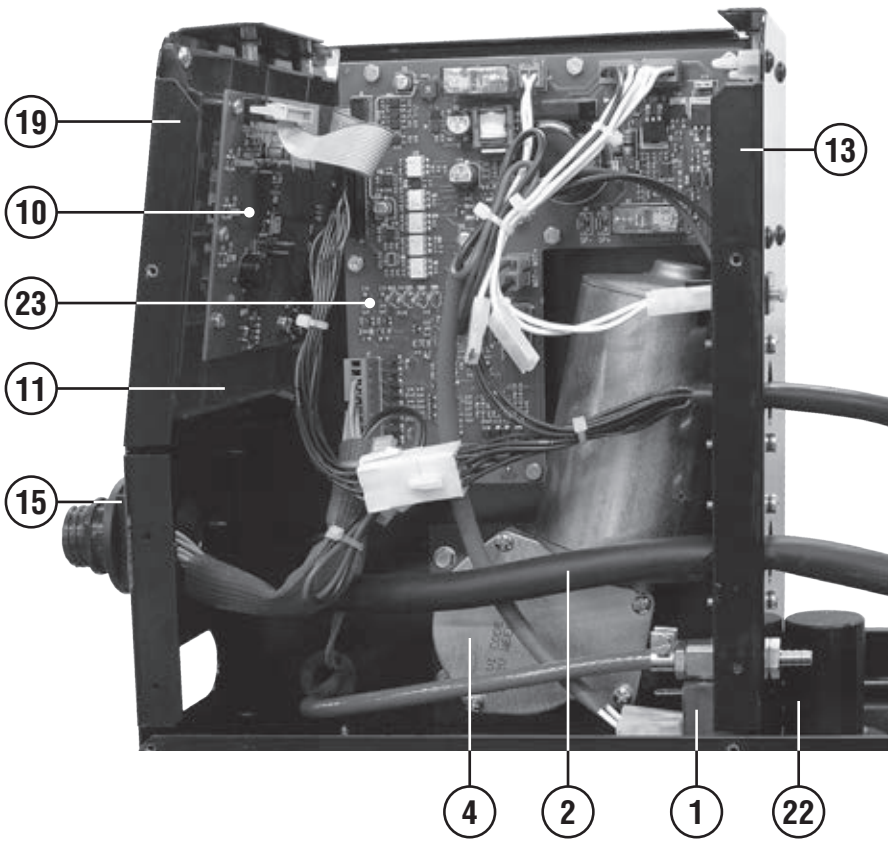

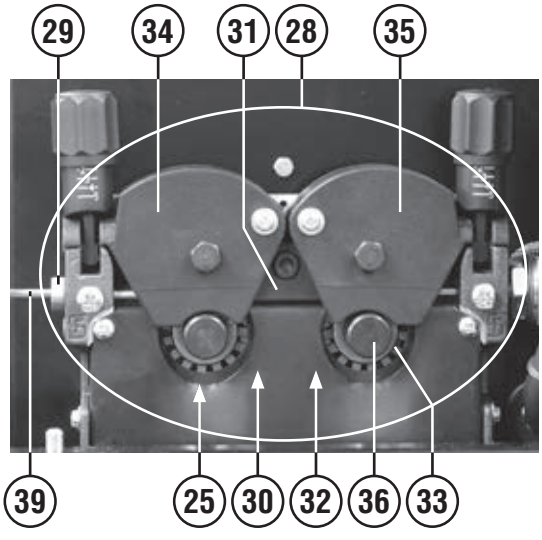



REF.	ELENCO PEZZI DI RICAMBIO PIECES DETACHEES SPARE PARTS LIST ERSATZTEILLISTE PIEZAS DE REPUESTO	CODICE CODE KODE
1	Elettrovalvola Electrovanne Electrovalve Elektroventil Electrovalvula	121801
2	Cavo 70 mmq 1,65 m - spina atlas 70 Cable 70 mmq 1,65 m - fiche atlas 70 Cable 70 mmq 1,65 m - plug atlas 70 Kabel 70 mmq 1,65 m - stecker atlas 70 Cavo 70 mmq 1,65 m - enchufe atlas 70	123067
3	Cablaggio connettore Cable connecteur Connector cable Anschlusskabel Cable conectador	125156
4	Motorino trainafilo Moteur pour devidoir Wire feed motor Drahtvorschubmotor Motor por arrastre hilo	153029
5	Protezione attacco torcia Support isolant torche Torch connection protection Brennersiolierlager Sosten isolator antorcha	312105
6	Assieme cerniera Charnière set Hinge set Scharnier set Bisagra set	312382
7	Manico Poignee Handle Handgriff Manija	312420
8	Distanziale per aspo Entretoise pour support bobine Reel spacer Distanzstueck Espàciador por aspa	321210
9	Kit frontale Kit partie frontal Front panel kit Gerätefront kit Kit frontal	982293
10	Kit scheda pannello Kit platine frontal Front panel card kit Gerätefrontskarte kit Kit tarjeta frontal	982285
11	Kit supporto display Kit support display Display holder kit Display halterung kit Kit soporte display	982288
12	Maniglia Poignee Handle Handgriff Manija	322590
13	Retro Partie arriere Back panel Rückseite Trasera	642813
14	Staffa Bride Braket Buegel Estribo	645406

REF.	ELENCO PEZZI DI RICAMBIO PIECES DETACHEES SPARE PARTS LIST ERSATZTEILLISTE PIEZAS DE REPUESTO	CODICE CODE KODE
15	Supporto presa Support prise Socket holder Steckdose halterung Soporte enchufe	645675
16	Gancio appendi torcia Accrocheur torche Torch hook Haken fuer brenner Gancho fijacion antorcha	645704
17	Assieme fondo Set chassis Bottom set Bodenteil set Set fondo	645869
18	Protezione scheda Protection fiche Card cover Kartedeckel Proteccion tarjeta	645871
19	Frontale Partie frontal Front panel Gerätefront Frontal	645872
20	Mantello Capot Cover Deckel Panel de cobertura	651258
21	Sportello Guichet Door Tür Portezuela	651259
22	Kit supporto traino Kit support devidoir Wirefeeder holding kit Drahtvorschubhalterungskit Kit sosten alimentador de hilo	982294
23	Kit scheda controllo Kit carte controle Control board kit Steuerungskarte kit Kit tarjeta control	982284
24	Spina atlas 70mmq Fiche atlas 70mmq Plug atlas 70mmq Stecker atlas 70mmq Enchufe atlas 70mmq	804201
25	Rullino traino 4r ø 0.8fe-1.0fe “p-k” Galet 4r ø 0.8fe-1.0fe “p-k” Feed roll 4r ø 0.8fe-1.0fe “p-k” Vorschubrolle 4r ø 0.8fe-1.0fe “p-k” Roldana 4r ø 0.8fe-1.0fe “p-k”	722227
26	Rullino traino 4r ø 1.2fe-1.6fe “p-k” Galet 4r ø 1.2fe-1.6fe “p-k” Feed roll 4r ø 1.2fe-1.6fe “p-k” Vorschubrolle 4r ø 1.2fe-1.6fe “p-k” Roldana 4r ø 1.2fe-1.6fe “p-k”	722241
27	Attacco torcia Attelage torche Torch connection Schlauchpacketanschluss Enghanche antorcha	723067
28	Gruppo traino Dévidoir Wire feed assy Drahtvorschub Arrastre hilo	723096

REF.	ELENCO PEZZI DI RICAMBIO PIECES DETACHEES SPARE PARTS LIST ERSATZTEILLISTE PIEZAS DE REPUESTO	CODICE CODE KODE
29	Entrata guidafilo Entree guide fil Wire guide inlet Drahtfuehrungsseeleeingang Entrata vaina guiadera alambre	742064
30	Vite blocca ingranaggio Vis bloc engrenage Gearblocking screw Zahnradhalterschraube Tornillo bloqueo engranaje	742079
31	Guidafilo intermedio Guide fil Wire guide Drahtfuehrungsseele Vaina guiadera alambre	742121
32	Ingranaggio motore Engrenage motor Motor drive gear Motorszahnrad Engranaje motor	742155
33	Adattatore Adapteur Adapter Zahnrad Adaptador	742166
34	Ancora controrullino sinistra Ancre galet gauche Left anchor for pressure roller Linke anker fuer gegenrolle Ancora para contra roldana izquierdo	742167
35	Ancora controrullino destra Ancre galet droite Right anchor for pressure roller Rechte anker fuer gegenrolle Ancora para contra roldana derecho	742168
36	Vite bloccarullino Vis ferme galet Rollerfixing screw Rollerhalterschraube Tornillo bloque roldana	742397
37	Kit aspo 15kg Kit support bobine 15kg Reel kit 15kg Wickler kit 15kg Kit aspa 15kg	981703
38	Kit manopola encoder d.29 Kit poignee encoder d.29 Encoder knob kit d.29 Encodergriff kit d.29 Kit manija encoder d.29	982070
39	Kit guaina entrata motore Kit gaine entree moteur Gas hose kit Drahtfuehrungsseelekit Kit vaina guiadera alambre	990873

Schema elettrico, Schéma électrique, Diagram, Schaltplan, Esquema de conexiones.

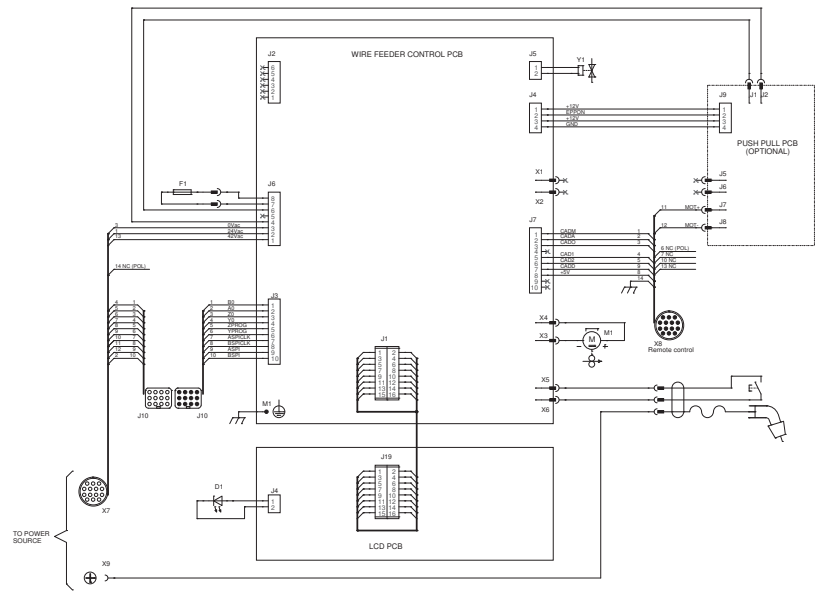

ELENCO PEZZI DI RICAMBIO
LISTE PIECES DETACHEES
SPARE PARTS LIST
ERSATZTEILLISTE
PIEZAS DE REPUESTO

TE 450 WIREFEEDER

Esploso macchina, Dessin appareil, Machine drawing, Explosions Zeichnung des Geräts, Diseño seccionado maquina.

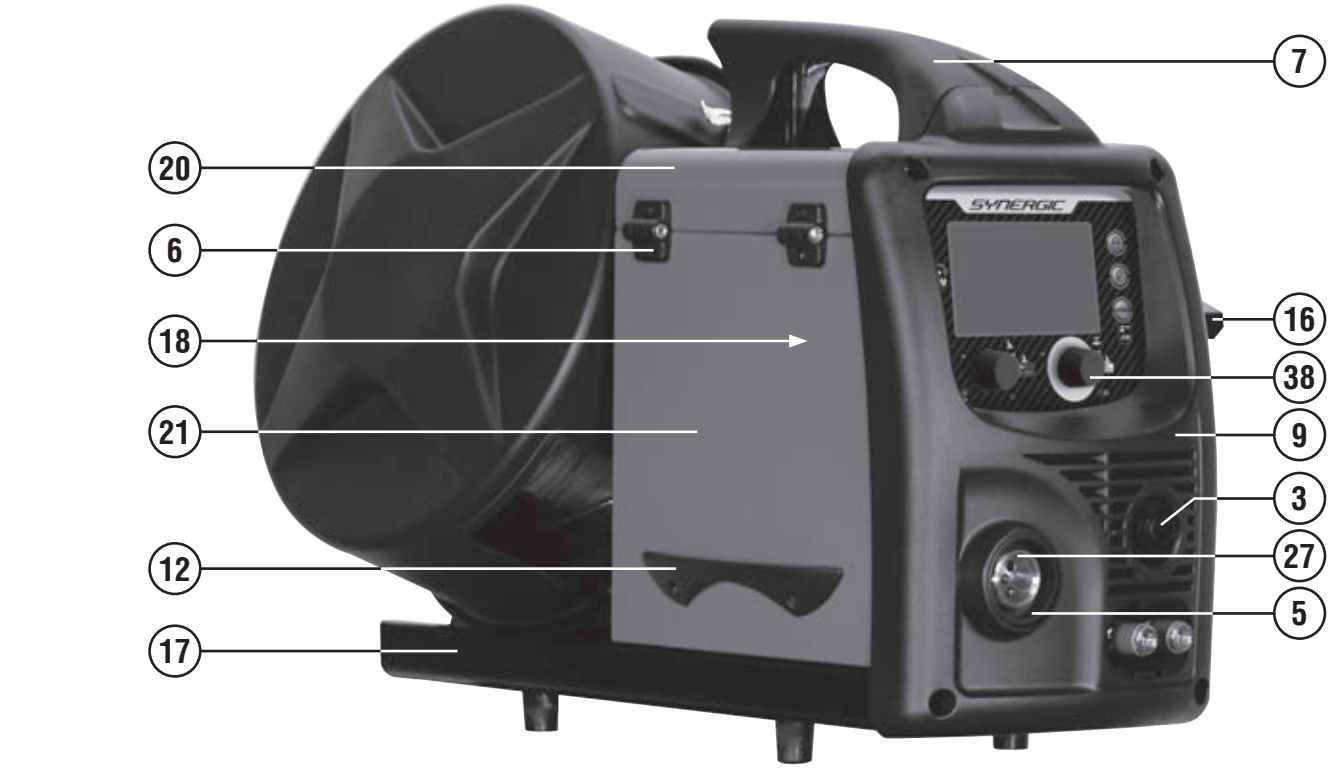

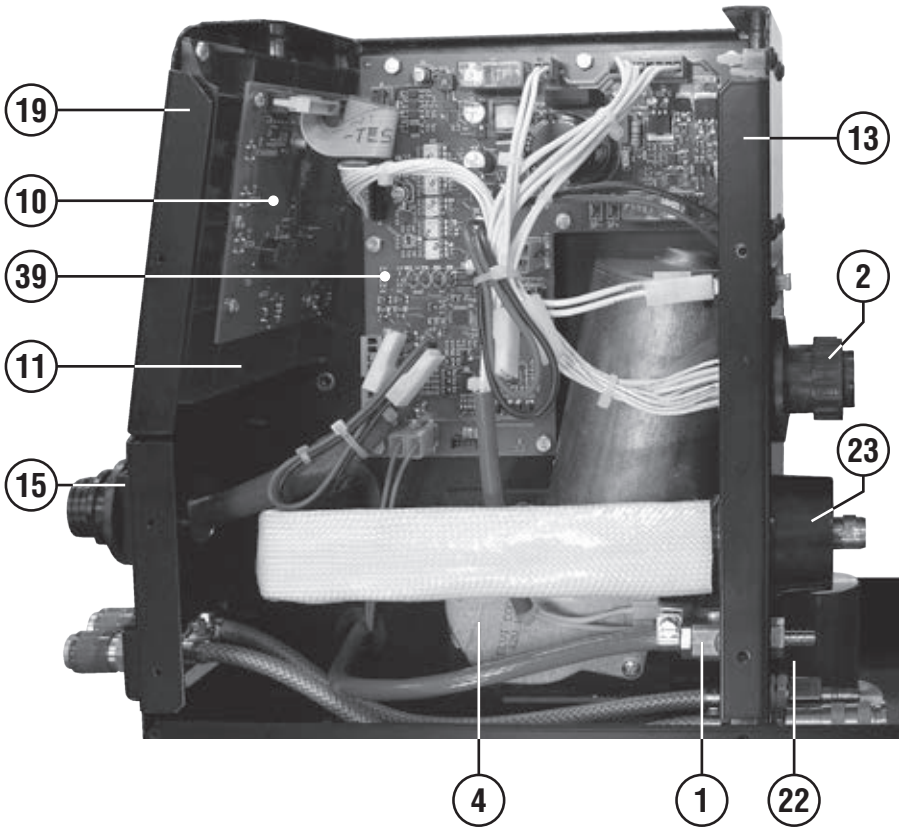

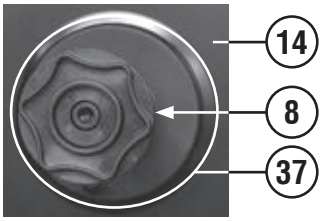

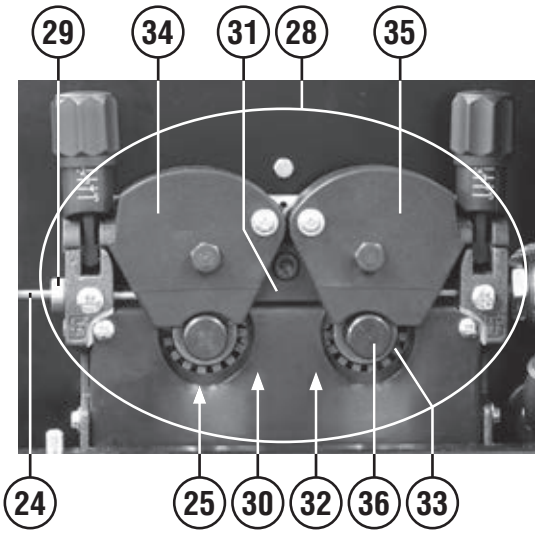

REF.	ELENCO PEZZI DI RICAMBIO PIECES DETACHEES SPARE PARTS LIST ERSATZTEILLISTE PIEZAS DE REPUESTO	CODICE CODE KODE
1	Elettrovalvola Electrovanne Electrovalve Elektroventil Electrovalvula	121801
2	Cablaggio traino Cable devidoir Wirefeeder cable Drahtvorschubskabel Cable alimentador de hilo	125157
3	Cablaggio connettore Cable connecteur Connector cable Anschlusskabel Cable conectador	125156
4	Motorino trainafilo Moteur pour devidoir Wire feed motor Drahtvorschubmotor Motor por arrastre hilo	153029
5	Protezione attacco torcia Support isolant torche Torch connection protection Brennersiolierlager Sosten isolator antorcha	312105
6	Assieme cerniera Charnière set Hinge set Scharnier set Bisagra set	312382
7	Manico Poignee Handle Handgriff Manija	312420
8	Distanziale per aspo Entretoise pour support bobine Reel spacer Distanzstueck Espàciador por aspa	321210
9	Kit frontale Kit partie frontal Front panel kit Gerätefront kit Kit frontal	982293
10	Kit scheda pannello Kit platine frontal Front panel card kit Gerätefrontskarte kit Kit tarjeta frontal	982285
11	Kit supporto display Kit support display Display holder kit Display halterung kit Kit soporte display	982288
12	Maniglia Poignee Handle Handgriff Manija	322590
13	Retro Partie arriere Back panel Rückseite Trasera	642814
14	Staffa Bride Braket Buegel Estribo	645406
15	Supporto presa Support prise Socket holder Steckdose halterung Soporte enchufe	645675
16	Gancio appendi torcia Accrocheur torche Torch hook Haken fuer brenner Gancho fijacion antorcha	645704
17	Assieme fondo Set chassis Bottom set Bodenteil set Set fondo	645869
18	Protezione scheda Protection fiche Card cover Kartedeckel Proteccion tarjeta	645871
19	Frontale Partie frontal Front panel Gerätefront Frontal	645868
20	Mantello Capot Cover Deckel Panel de cobertura	651258
21	Sportello Guichet Door Tür Portezuela	651259
22	Kit supporto traino Kit support devidoir Wirefeeder holding kit Drahtvorschubhalterungskit Kit sosten alimentador de hilo	982294
23	Spina fissa ax mmq.70/95 Fiche atlas ax 70/95 Atlas plug ax 70/95 Atlas stecker ax 70/95 Enchufe atlas ax 70/95	804220
24	Kit guaina entrata motore Kit gaine entree moteur Gas hose kit Drahtfuehrungsseelekit Kit vaina guiadera alambre	990873
25	Rullino traino 4r ø 0.8fe-1.0fe “p-k” Galet 4r ø 0.8fe-1.0fe “p-k” Feed roll 4r ø 0.8fe-1.0fe “p-k” Vorschubrolle 4r ø 0.8fe-1.0fe “p-k” Roldana 4r ø 0.8fe-1.0fe “p-k”	722227
26	Rullino traino 4r ø 1.2fe-1.6fe “p-k” Galet 4r ø 1.2fe-1.6fe “p-k” Feed roll 4r ø 1.2fe-1.6fe “p-k” Vorschubrolle 4r ø 1.2fe-1.6fe “p-k” Roldana 4r ø 1.2fe-1.6fe “p-k”	722241
27	Attacco torcia Attelage torche Torch connection Schlauchpacketanschluss Enghanche antorcha	723067
28	Gruppo traino Dévidoir Wire feed assy Drahtvorschub Arrastre hilo	723096
29	Entrata guidafilo Entree guide fil Wire guide inlet Drahtfuehrungsseeleeingang Entrata vaina guiadera alambre	742064
30	Vite blocca ingranaggio Vis bloc engrenage Gearblocking screw Zahnradhalterschraube Tornillo bloqueo engranaje	742079
31	Guidafilo intermedio Guide fil Wire guide Drahtfuehrungsseele Vaina guiadera alambre	742121
32	Ingranaggio motore Engrenage motor Motor drive gear Motorszahnrad Engranaje motor	742155
33	Adattatore Adapteur Adapter Zahnrad Adaptador	742166
34	Ancora controrullino sinistra Ancre galet gauche Left anchor for pressure roller Linke anker fuer gegenrolle Ancora para contra roldana izquierdo	742167
35	Ancora controrullino destra Ancre galet droite Right anchor for pressure roller Rechte anker fuer gegenrolle Ancora para contra roldana derecho	742168
36	Vite bloccarullino Vis ferme galet Rollerfixing screw Rollerhalterschraube Tornillo bloque roldana	742397
37	Kit aspo 15kg Kit support bobine 15kg Reel kit 15kg Wickler kit 15kg Kit aspa 15kg	981703
38	Kit manopola encoder d.29 Kit poignee encoder d.29 Encoder knob kit d.29 Encodergriff kit d.29 Kit manija encoder d.29	982070
39	Kit scheda controllo Kit carte controle Control board kit Steuerungskarte kit Kit tarjeta control	982284

Schema elettrico, Schéma électrique, Diagram, Schaltplan, Esquema de conexiones.

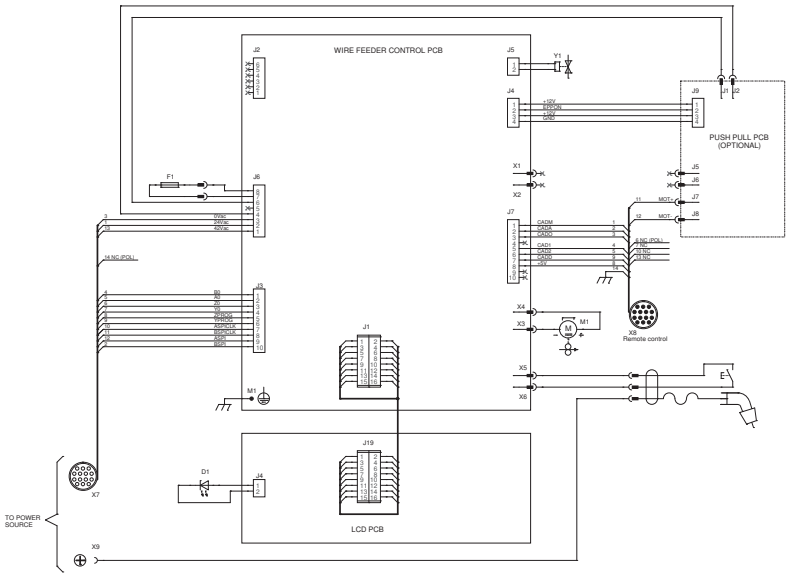

ELENCO PEZZI DI RICAMBIO
LISTE PIECES DETACHEES
SPARE PARTS LIST
ERSATZTEILLISTE
PIEZAS DE REPUESTO

ELECTROMIG 550 SYNERGIC

TELWIN

Esploso macchina, Dessin appareil, Machine drawing, Explosions Zeichnung des Geräts, Diseño seccionado maquina.

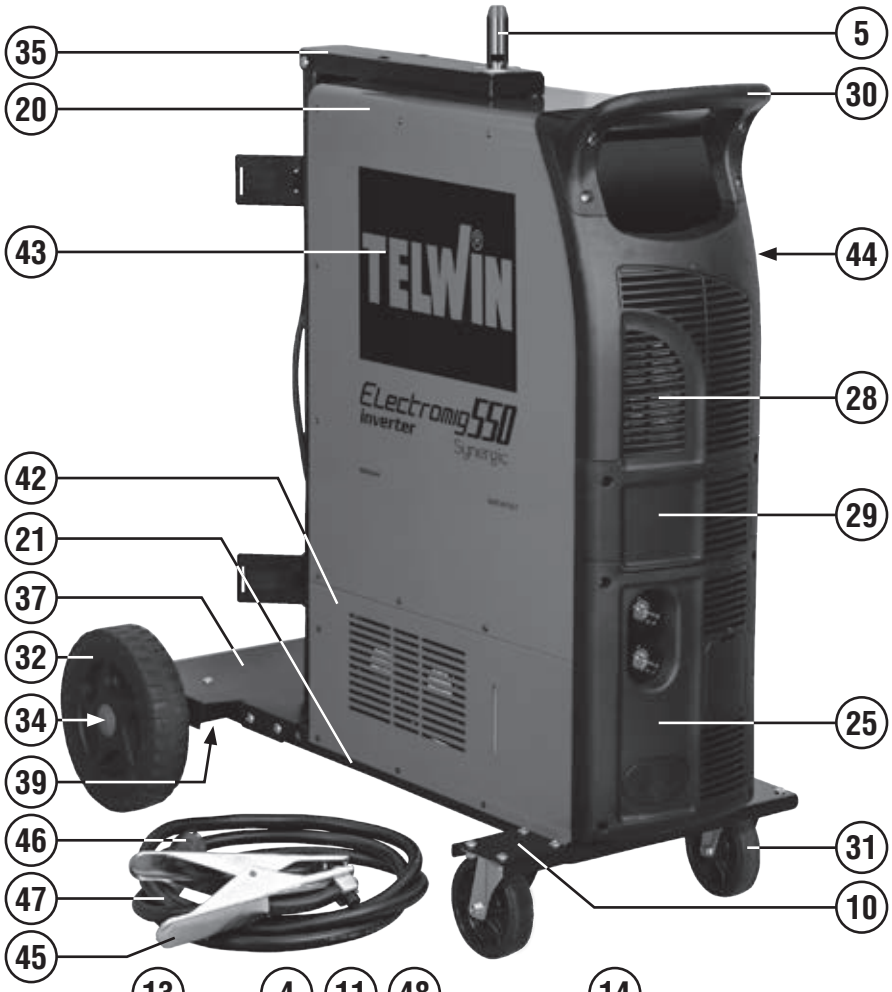

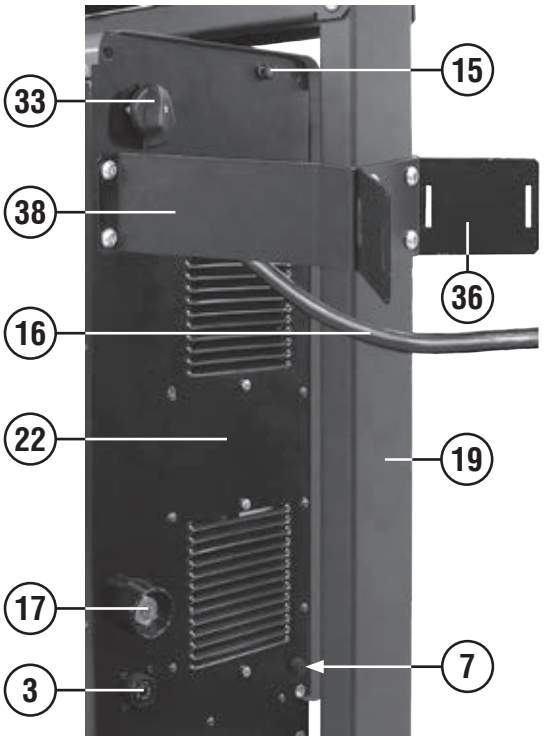

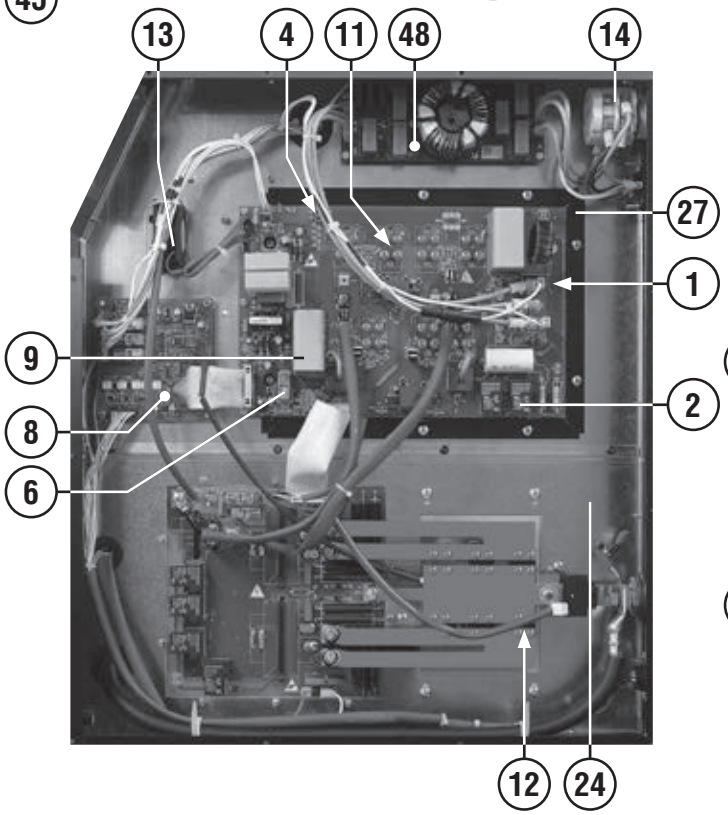

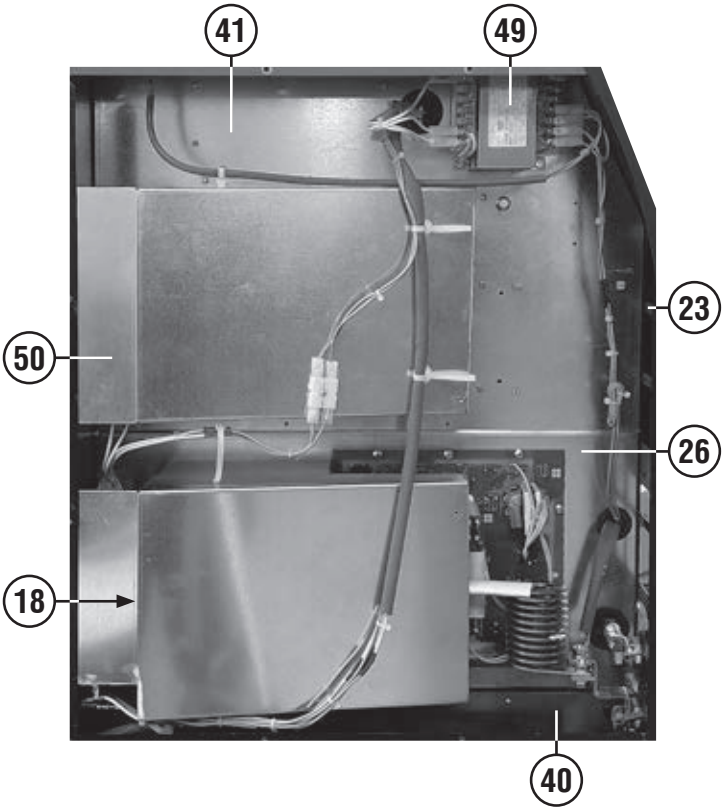

REF.	ELENCO PEZZI DI RICAMBIO PIECES DETACHEES SPARE PARTS LIST ERSATZTEILLISTE PIEZAS DE REPUESTO	CODICE CODE KODE
1	Ponte Pont Bridge Brücke Puente	111465
2	Rele Relais Relais Relais Conectador	111211
3	Cablaggio II° Cable II° Cable II° Kabel II° Cable II°	125185
4	Resistenza Resistance Resistance Widerstand Resistencia	116307
5	Perno Goujon Pin Zapfen Perno	689037
6	Rele' Relais Relais Relais Relais	116320
7	Fusibile Fusible Fuse Sicherung Fusible	122437
8	Kit scheda controllo Kit carte controle Control board kit Steuerungskarte kit Kit tarjeta control	982323
9	Condensatore Condensateur Condenser Kondensator Condensator	116740
10	Staffa supporto ruote Bride suport roues Wheel holding bracket Bügel f. Räderhalterung Estribo sosten ruedas	641099
11	Igbt gt80da120u 80a 1200v sot227 Igbt gt80da120u 80a 1200v sot227 Igbt gt80da120u 80a 1200v sot227 Igbt gt80da120u 80a 1200v sot227 Igbt gt80da120u 80a 1200v sot227	112020
12	Diodo Diode Diode Diode Diodo	113747
13	Cablaggio ventilatore Cable de ventilateur Fan cable Ventilatorskabel Cable de vendilador	125085
14	Commutatore Commutateur Switch Schalter Conmutador	121505
15	Lampada Temoin lumineux Lamp Kontrollampe Lamparilla de control	122709
16	Cavo alim.Fror 4g06.00 L=03.00 Cable alim. Fror 4g06.00 L=03.00 Mains cable fror 4g06.00 L=03.00 Netzkabel fror 4g06.00 L=03.00 Cable alim. Fror 4g06.00 L=03.00	132449
17	Presa atlas 70/95mmq Prise atlas 70/95mmq Socket atlas 70/95mmq Steckdose atlas 70/95mmq Enchufe atlas 70/95mmq	804198
18	Ventilatore Ventilateur Fan Ventilator Ventilador	152297
19	Kit colonna Kit colonne Column kit Spalte kit Kit columna	982062
20	Kit mantello Kit capot Cover kit Deckel kit Kit panel de cobertura	982061
21	Kit fondo Kit chassis Bottom kit Bodenteil kit Kit fondo	982060
22	Kit retro Kit partie arriere Back panel kit Rückseite kit Kit trasera	982092
23	Kit frontale Kit partie frontal Front panel kit Gerätefront kit Kit frontal	982091
24	Kit scheda secondario Kit fiche secondaire Secondary pcb kit Sekundaertrafokarte kit Kit tarjeta secundario	982090
25	Kit frontale inferiore Kit partie frontal inferieur Lower front panel kit Gerätefront unten kit Kit frontal inferior	982289
26	Diaframma inferiore Diaphragme inferieur Lower diaphragm Unten diaphragma Diafragma inferior	485095
27	Kit scheda primario Kit fiche primaire Primary pcb kit Primärtrafokarte kit Kit tarjeta primario	982089
28	Frontale superiore Partie frontal superieur Upper front panel Obere gerätefront Frontal superior	321320
29	Frontale Partie frontal Front panel Gerätefront Frontal	321241
30	Manico Poignee Handle Handgriff Manija	321279
31	Ruota con supporto Roue + support tournant Wheel + swivel support Rad + drehbarerhalter Rueda + sosten giratorio	321398
32	Ruota Roue Wheel Rad Rueda	321389
33	Assieme manopola per commutatore Set poigne pour commutateur Switch knob set Umschaltergriff set Set manija para conmutador	323101
34	Asse per ruote Axes pour roue Wheels axle Raederachse Eje por rueda	422940
35	Braccio Brace Arm Arm Brazo	641093
36	Staffa portabombola Etrier porte-bouteille Bottle-holder bracket Kasten für flasche Estribo porta bombona	641095
37	Supporto bombola Support bouteille Bottle holder Flaschenhalter Sosten bombona	641096
38	Supporto colonna Support colonne Column holder Säule halterung Soporte columna	641098
39	Kit staffa ruote Kit bride roues Wheels braket kit Rad buegel kit Kit estribo ruedas	982063
40	Ripiano Surface Surface Deckel Plano	645887
41	Diaframma superiore Diaphragme superieur Upper diaphragm Obere diaphragma Diafragma superior	484907
42	Fianco destro Partie lateral droite Right side panel Rechts seitenblech Flanco derecho	656234
43	Fianco destro Partie lateral droite Right side panel Rechts seitenblech Flanco derecho	656235
44	Fianco sinistro Partie lateral gauche Left side panel Links seitenblech Flanco isquierdo	656236
45	Toledo 600 pinza di massa 600a Toledo 600 pince de masse 600a Toledo 600 work clamp 600a Toledo 600 masseklemme 600a Toledo 600 pinza de masa 600a	804184
46	Spina atlas 70mmq Fiche atlas 70mmq Plug atlas 70mmq Stecker atlas 70mmq Enchufe atlas 70mmq	804201
47	Pinza di massa + cavo 70mmq 3m ax70 Pince de masse + cable 70mmq 3m ax70 Work clamp + cable 70mmq 3m ax70 Massezange + kabel 70mmq 3m ax70 Pinca de masa + cable 70mmq 3m ax70	804222
48	Kit scheda filtro ingresso Kit platine filtre input Input filter card kit Input filterkarte kit Kit tarjeta filtro input	980947
49	Kit trasformatore ausiliario Kit transformateur auxiliaire Auxiliary transformer kit Hilfstransformatorkit Kit transformador auxiliar	980958
50	Convogliatore Conveyeur Conveyor Luefterabdeckung Conveyor	485092

Schema elettrico, Schéma électrique, Diagram, Schaltplan, Esquema de conexiones.

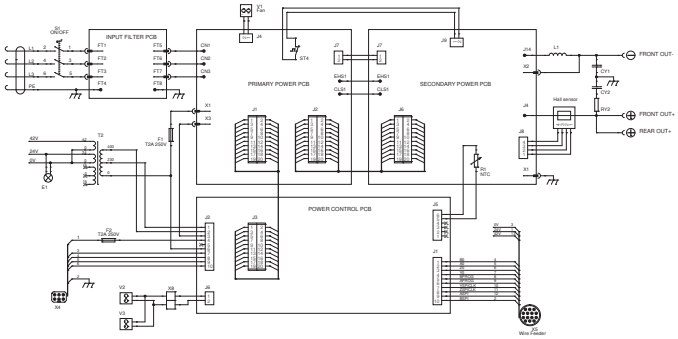

Esploso torcia, Dessin torche, Torch drawing, Schlauchpaket - Explosionszeichnung, Diseño seccionado antorcha.

722798 3m
722800 5m

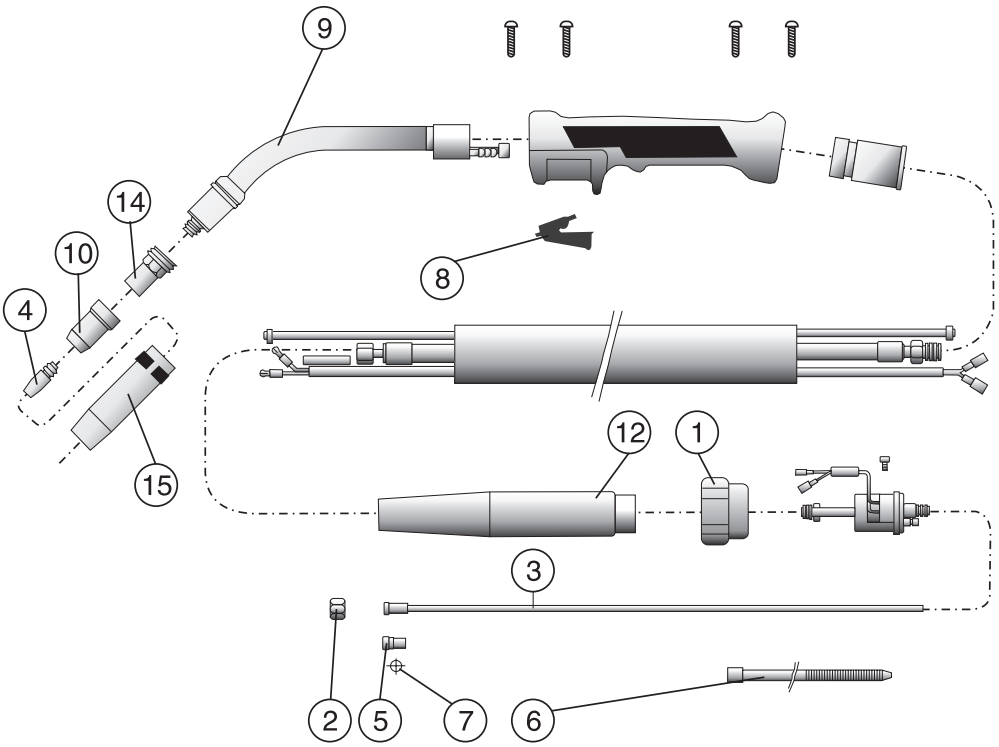

REF.	ELENCO PEZZI RICAMBIO TORCIA LISTE PIECES DETACHEES TORCHE SPARE PARTS LIST TORCH ERSATZTEILLISTE SCLAUCHPAKET PIEZAS DE REPUESTO ANTORCHA	CODICE CODE KODE
1	Ghiera fissaggio Embout fixage Ring nut Nutmutter Virola por fiyacion	722007
2	Dado fissaggio guaina Ecrou fixage gaine Liner nut Befestigungsmutter Dado por fiyacion vaina	722013
3	Guaina guidafilo d. 1-1,2 Mm 3 m Gaine pour fil d. 1-1,2 Mm 3 m Wire guide hose d. 1-1,2 Mm 3 m Drahtführungsseele d. 1-1,2 Mm 3 m Vaina guia hilo d. 1-1,2 Mm 3 m	742164
3	Guaina guidafilo ø 1,6-2mm 3m Gaine guide fil ø 1,6-2mm 3m Wire guide hose ø 1,6-2mm 3m Drahtführungsseele ø 1,6-2mm 3m Vaina guida alambre ø 1,6-2mm 3m	722814
3	Guaina guidafilo d. 1,2-1,6mm 3m gialla Gaine pour fil d. 1,2-1,6mm 3m jaune Wire guide hose d. 1,2-1,6mm 3m yellow Drahtführungsseele d. 1,2-1,6mm 3m gelbe Vaina guia hilo d. 1,2-1,6mm 3m amarilla	722795
3	Guaina guidafilo d. 1,0-1,2 3 M rossa Gaine pour fil d. 1,0-1,2 3 M rouge Wire guide hose d. 1,0-1,2 3 M red Drahtführungsseele d. 1,0-1,2 3 M rot Vaina guia hilo d.1,0-1,2 3 M roja	722689
3	Guaina guidafilo d. 1,6-2 Mm 3 m al Gaine pour fil d. 1,6-2 Mm 3 m al Wire guide hose d. 1,6-2 Mm 3 m al Drahtführungsseele d. 1,6-2 Mm 3 m al Vaina guia hilo d. 1,6-2 Mm 3 m al	722597
4	Tubetto di contatto d. 0,8 Mm m8 Tube contact d. 0,8 Mm m8 Contact tip d. 0,8 Mm m8 Kontaktdüse d. 0,8 Mm m8 Tubito de contacto d. 0,8 Mm m8	722581
4	Tubetto di contatto d. 1,6 Mm(cu cr zr) Tube contact d. 1,6 Mm (cu cr zr) Contact tip d. 1,6 Mm (cu cr zr) Kontaktdüse d. 1,6 Mm (cu cr zr) Tubito de contacto d. 1,6 Mm (cu cr zr)	742161
4	Tubetto di contatto d. 1,2 Mm(cu cr zr) Tube contact d. 1,2 Mm (cu cr zr) Contact tip d. 1,2 Mm (cu cr zr) Kontaktdüse d. 1,2 Mm (cu cr zr) Tubito de contacto d. 1,2 Mm (cu cr zr)	742160
4	Tubetto di contatto d. 1 Mm (cu cr zr) Tube contact d. 1 Mm (cu cr zr) Contact tip d. 1 Mm (cu cr zr) Kontaktdüse d. 1 Mm (cu cr zr) Tubito de contacto d. 1 Mm (cu cr zr)	742159
4	Tubetto di contatto d. 1 Mm Tube contact d. 1 Mm Contact tip d. 1 Mm Kontaktdüse d. 1 Mm Tubito de contacto d. 1 Mm	722582
4	Tubetto di contatto d. 1,2 Mm Tube contact d. 1,2 Mm Contact tip d. 1,2 Mm Kontaktdüse d. 1,2 Mm Tubito de contacto d. 1,2 Mm	722583
4	Tubetto di contatto d. 2 Mm al/flux Tube contact d. 2 Mm al/flux Contact tip d. 2 Mm al/flux Kontaktdüse d. 2 Mm al/flux Tubito de contacto d. 2 Mm al/flux	722772
4	Tubetto di contatto d. 1,6 Mm al/flux m8 Tube contact d. 1,6 Mm al/flux m8 Contact tip d. 1,6 Mm al/flux m8 Kontaktdüse d. 1,6 Mm al/flux m8 Tubito de contacto d. 1,6 Mm al/flux m8	722771
4	Tubetto di contatto d. 1,2 Mm al/flux m8 Tube contact d. 1,2 Mm al/flux m8 Contact tip d. 1,2 Mm al/flux m8 Kontaktdüse d. 1,2 Mm al/flux m8 Tubito de contacto d. 1,2 Mm al/flux m8	722770
4	Tubetto di contatto d. 1 Mm al/flux m8 Tube contact d. 1 Mm al/flux m8 Contact tip d. 1 Mm al/flux m8 Kontaktdüse d. 1 Mm al/flux m8 Tubito de contacto d. 1 Mm al/flux m8	722769
4	Tubetto contatto d.2,0 Tube contact d.2,0 Contact tip d.2,0 Kontaktroehrchen d.2,0 Tubito de contacto d.2,0	722586
4	Tubetto di contatto d. 1,6 Mm Tube contact d. 1,6 Mm Contact tip d. 1,6 Mm Kontaktroehrchen d. 1,6 Mm Tubito de contacto d. 1,6 Mm	722587
5	Nippel ferma guaina Nippel serre gaine Wire guide locking nipples Drahtseeleklemmnippel Nippel de bloqueo vaina	722599
5	Nipples ferma guaina Nipples serre gaine Wire guide locking nipples Drahtseeleklemmnippel Nipples de bloqueo vaina	722598
6	Tubetto ferma guaina Tuyau serre gaine Wire guide locking tube Drahtseeleklemmrohr Tubito de bloqueo vaina	722600
7	Anello or Anneau or Or ring Or ring Anillo or	722606
7	Anello or Bague or Or ring Or ring Anillo or	722601
8	Pulsante Poussoir Pushbutton Druckknopf Pulsador	722677
9	Lancia mt40 Lance mt40 Swan neck mt40 Brennerhals mt40 Encorvado mt40	722801
10	Diffusore gas isolante mt 40 Diffuseur gaz isolant mt 40 Insulating gas diffuser mt 40 Isolierte gas diffusor mt 40 Difusor gas aislante mt 40	722802
14	Supporto tubetto contatto mt40 Support tube contact mt40 Contact tip holder mt40 Kontaktröhrchen träger mt40 Sosten tubito de contacto mt40	722807
15	Ugello conico mt40 Buse conique mt40 Conical nozzle mt40 Konische düse mt40 Inyector conico mt40	722808
15	Ugello cilindrico mt40 Buse cylindrique mt40 Cylindrical nozzle mt40 Zylindrische düse mt40 Inyector cilindrico mt40	722809

Esploso torcia, Dessin torche, Torch drawing, Schlauchpaket - Explosionszeichnung, Diseño seccionado antorcha.

- Esploso torcia R.A. (Raffreddata ad acqua)
- Dessin torche R.A. (Refroide par eau)
- Drawing sectionalized torch R.A. (Water cooled)
- Zerlegte Zeichnung Schlauchpaket R.A. (Wasserkuhlung)
- Diseno seccionado antorcha R.A. (Enfriadar a agua)

722625 3m
742821 4m
722683 5m

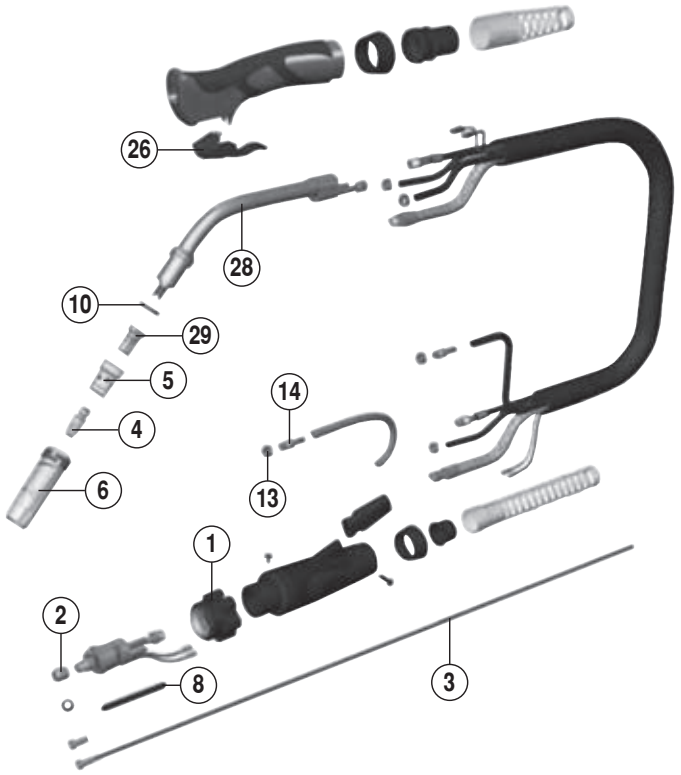

REF.	ELENCO PEZZI RICAMBIO TORCIA LISTE PIECES DETACHEES TORCHE SPARE PARTS LIST TORCH ERSATZTEILLISTE SCLAUCHPAKET PIEZAS DE REPUESTO ANTORCHA	CODICE CODE KODE
1	Ghiera fissaggio Embout fixage Ring nut Nutmutter Virola por fiyacion	722007
2	Dado fissaggio guaina Ecrou fixage gaine Liner nut Befestigungsmutter Dado por fiyacion vaina	722013
3	Guaina guidafilo ø1-1,2 tefl/graf.+Term. Gaine pour fil ø1-1,2 tefl/graf.+Term. Wire guide hose ø1-1,2 tefl/graf.+Term. Drahtführungsseele ø1-1,2 tefl/graf.+Te Vaina guia hilo ø1-1,2 tefl/graf.+Term.	742812
3	Guaina guidafilo ø 1,2-1,6 mm 3 m Gaine pour fil ø 1,2-1,6 mm 3 m Wire guide hose ø 1,2-1,6 mm 3 m Drahtführungsseele ø 1,2-1,6 mm 3 m Vaina guia hilo ø 1,2-1,6 mm 3 m	722588
3	Guaina guidafilo ø 1,0-1,2 mm 3 m Gaine pour fil ø 1,0-1,2 mm 3 m Wire guide hose ø 1,0-1,2 mm 3 m Drahtführungsseele ø 1,0-1,2 mm 3 m Vaina guia hilo ø 1,0-1,2 mm 3 m	722590
3	Guaina guidafilo ø 1,6-2,0 al teflon Gaine pour fil ø 1,6-2,0 al teflon Wire guide hose ø 1,6-2,0 al teflon Drahtführungsseele ø 1,6-2,0 al teflon Vaina guia hilo ø 1,6-2,0 al teflon	742811
3	Guaina g.F. D.2-2,4 Mt.3 Gaine guide fil d.2-2,4 M3 Wire guide hose d.2-2,4 M3 Drahtfuehrungsseele d.2-2,4 M3 Vaina guiadera alambre d. 2-2,4 M3	722820
4	Tubetto di contatto d. 0,8 Mm m8 Tube contact d. 0,8 Mm m8 Contact tip d. 0,8 Mm m8 Kontaktdüse d. 0,8 Mm m8 Tubito de contacto d. 0,8 Mm m8	722581
4	Tubetto di contatto d. 1 Mm Tube contact d. 1 Mm Contact tip d. 1 Mm Kontaktdüse d. 1 Mm Tubito de contacto d. 1 Mm	722582
4	Tubetto di contatto d. 1,2 Mm Tube contact d. 1,2 Mm Contact tip d. 1,2 Mm Kontaktdüse d. 1,2 Mm Tubito de contacto d. 1,2 Mm	722583
4	Tubetto di contatto ø 2,4 mm Tube contact ø 2,4 mm Contact tip ø 2,4 mm Kontaktdüse ø 2,4 mm Tubito de contacto ø 2,4 mm	722773
4	Tubetto contatto d.2,0 Tube contact d.2,0 Contact tip d.2,0 Kontaktroehrchen d.2,0 Tubito de contacto d.2,0	722586

REF.	ELENCO PEZZI RICAMBIO TORCIA LISTE PIECES DETACHEES TORCHE SPARE PARTS LIST TORCH ERSATZTEILLISTE SCLAUCHPAKET PIEZAS DE REPUESTO ANTORCHA	CODICE CODE KODE
4	Tubetto di contatto d. 1,6 Mm Tube contact d. 1,6 Mm Contact tip d. 1,6 Mm Kontaktroehrchen d. 1,6 Mm Tubito de contacto d. 1,6 Mm	722587
4	Tubetto di contatto d. 2 Mm al/flux Tube contact d. 2 Mm al/flux Contact tip d. 2 Mm al/flux Kontaktdüse d. 2 Mm al/flux Tubito de contacto d. 2 Mm al/flux	722772
4	Tubetto di contatto d. 1,6 Mm al/flux m8 Tube contact d. 1,6 Mm al/flux m8 Contact tip d. 1,6 Mm al/flux m8 Kontaktdüse d. 1,6 Mm al/flux m8 Tubito de contacto d. 1,6 Mm al/flux m8	722771
4	Tubetto di contatto d. 1,2 Mm al/flux m8 Tube contact d. 1,2 Mm al/flux m8 Contact tip d. 1,2 Mm al/flux m8 Kontaktdüse d. 1,2 Mm al/flux m8 Tubito de contacto d. 1,2 Mm al/flux m8	722770
4	Tubetto di contatto d. 1,6 Mm(cu cr zr) Tube contact d. 1,6 Mm (cu cr zr) Contact tip d. 1,6 Mm (cu cr zr) Kontaktdüse d. 1,6 Mm (cu cr zr) Tubito de contacto d. 1,6 Mm (cu cr zr)	742161
4	Tubetto di contatto d. 1,2 Mm(cu cr zr) Tube contact d. 1,2 Mm (cu cr zr) Contact tip d. 1,2 Mm (cu cr zr) Kontaktdüse d. 1,2 Mm (cu cr zr) Tubito de contacto d. 1,2 Mm (cu cr zr)	742160
4	Tubetto di contatto d. 1 Mm (cu cr zr) Tube contact d. 1 Mm (cu cr zr) Contact tip d. 1 Mm (cu cr zr) Kontaktdüse d. 1 Mm (cu cr zr) Tubito de contacto d. 1 Mm (cu cr zr)	742159
4	Tubetto di contatto d. 1 Mm al/flux m8 Tube contact d. 1 Mm al/flux m8 Contact tip d. 1 Mm al/flux m8 Kontaktdüse d. 1 Mm al/flux m8 Tubito de contacto d. 1 Mm al/flux m8	722769
5	Diffusore gas isolante mt 501 Diffuseur gaz isolant mt 501 Insulating gas diffuser mt 501 Isolierte gas diffusor mt 501 Difusor gas aislante mt 501	722593
6	Ugello puntatura Buse pointage Spot welding nozzle Punktschweissduese Inyector por puntos	722594
6	Ugello cilindrico mt500 Buse cylindrique mt500 Cylindrical nozzle mt500 Zylindrische düse mt500 Inyector cilindrico mt500	722595
6	Ugello conico mt500 Buse conique mt500 Conical nozzle mt500 Konische düse mt500 Inyector conico mt500	722585

REF.	ELENCO PEZZI RICAMBIO TORCIA LISTE PIECES DETACHEES TORCHE SPARE PARTS LIST TORCH ERSATZTEILLISTE SCLAUCHPAKET PIEZAS DE REPUESTO ANTORCHA	CODICE CODE KODE
8	Tubetto ferma guaina Tuyau serre gaine Wire guide locking tube Drahtseeleklemmrohr Tubito de bloqueo vaina	722600
10	Rondella isolante Rondelle isolante Insulating washer Isolierschraube Arandela aislante	722603
13	Fascetta Collier Hose ring Schelle Cintura	232114
14	Riduzione innesti rapidi Reducteur Reduction Schnelle kupplungreduktion Reduccion inyertos rapidos	722608
26	Pulsante Poussoir Pushbutton Druckknopf Pulsador	722677
28	Lancia mt500 Lance mt500 Swan neck mt500 Brennerhals mt500 Encorvado mt500	722708
29	Supporto tubetto contatto mt500 Support tube contact mt500 Contact tip holder mt500 Kontaktröhrchen träger mt500 Sosten tubito de contacto mt500	722709

ELENCO PEZZI DI RICAMBIO
LISTE PIECES DETACHEES
SPARE PARTS LIST
ERSATZTEILLISTE
PIEZAS DE REPUESTO

TE 550 AIR WIREFEEDER

TELWIN®

Esploso macchina, Dessin appareil, Machine drawing, Explosions Zeichnung des Geräts, Diseño seccionado maquina.

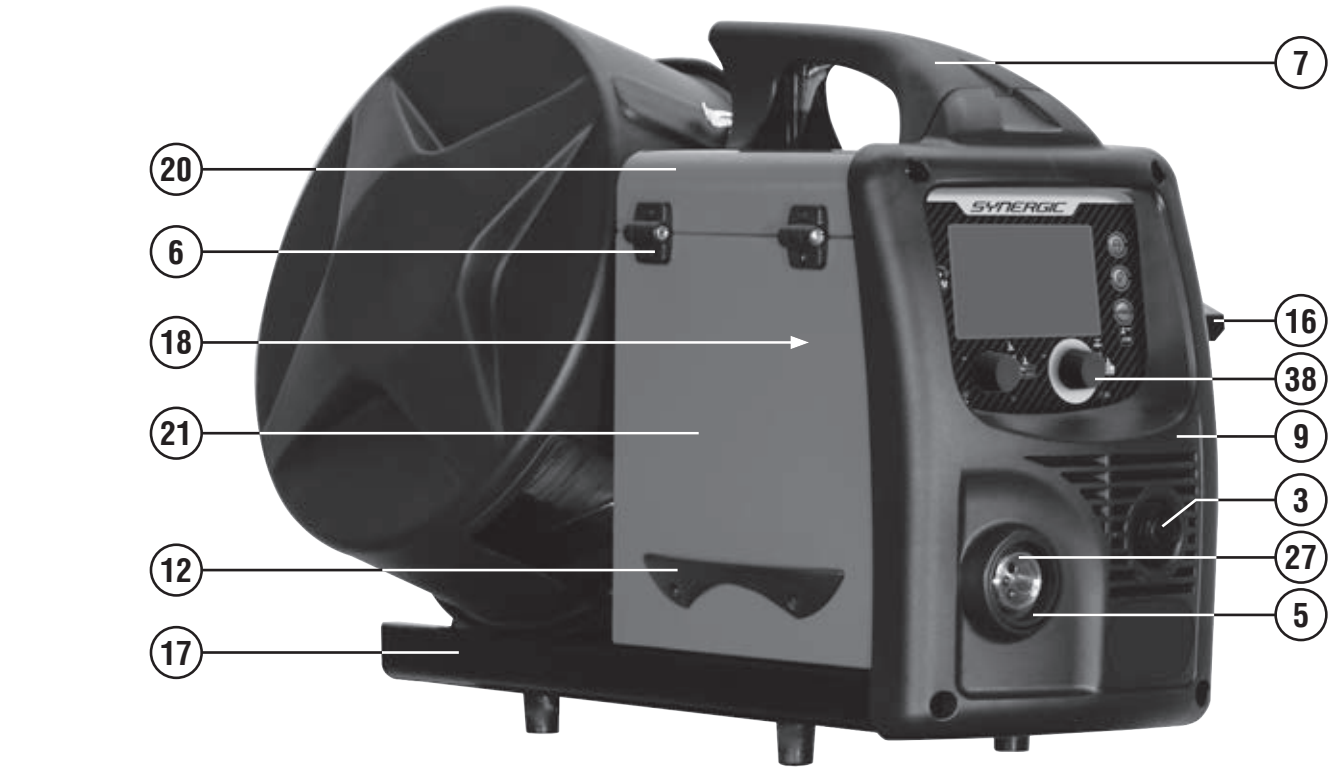

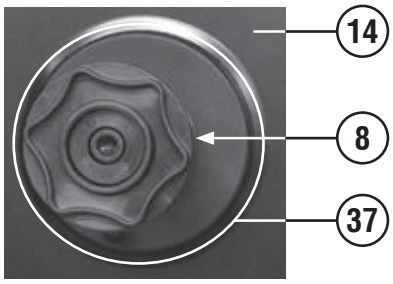

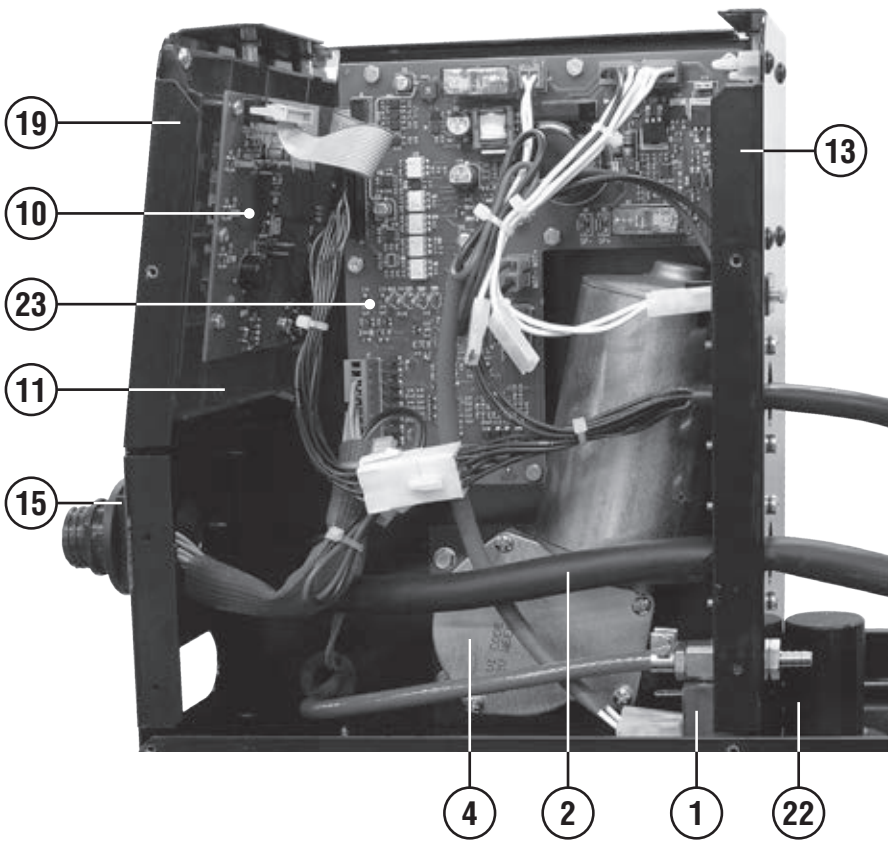

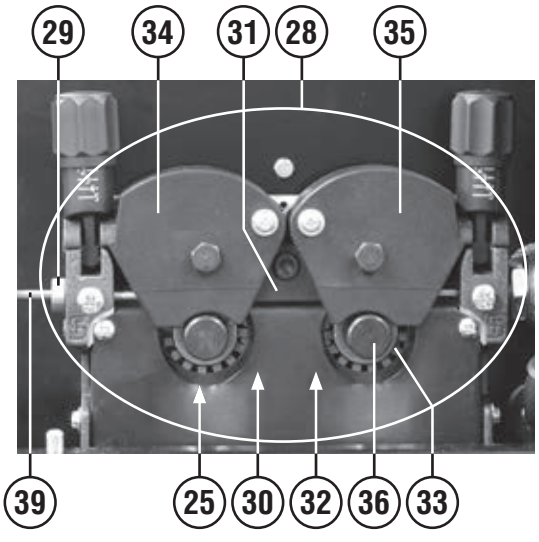



REF.	ELENCO PEZZI DI RICAMBIO PIECES DETACHEES SPARE PARTS LIST ERSATZTEILLISTE PIEZAS DE REPUESTO	CODICE CODE KODE
1	Elettrovalvola Electrovanne Electrovalve Elektroventil Electrovalvula	121801
2	Cavo 70 mmq 1,65 m - spina atlas 70 Cable 70 mmq 1,65 m - fiche atlas 70 Cable 70 mmq 1,65 m - plug atlas 70 Kabel 70 mmq 1,65 m - stecker atlas 70 Cavo 70 mmq 1,65 m - enchufe atlas 70	123067
3	Cablaggio connettore Cable connecteur Connector cable Anschlusskabel Cable conectador	125156
4	Motorino trainafilo Moteur pour devidoir Wire feed motor Drahtvorschubmotor Motor por arrastre hilo	153029
5	Protezione attacco torcia Support isolant torche Torch connection protection Brennersisolierlager Sosten isolator antorcha	312105
6	Assieme cerniera Charnière set Hinge set Scharnier set Bisagra set	312382
7	Manico Poignee Handle Handgriff Manija	312420
8	Distanziale per aspo Entretoise pour support bobine Reel spacer Distanzstueck Espàciador por aspa	321210
9	Kit frontale Kit partie frontal Front panel kit Gerätefront kit Kit frontal	982293
10	Kit scheda pannello Kit platine frontal Front panel card kit Gerätefrontskarte kit Kit tarjeta frontal	982299
11	Kit supporto display Kit support display Display holder kit Display halterung kit Kit soporte display	982288
12	Maniglia Poignee Handle Handgriff Manija	322590
13	Retro Partie arriere Back panel Rückseite Trasera	642813
14	Staffa Bride Braket Buegel Estribo	645406
15	Supporto presa Support prise Socket holder Steckdose halterung Soporte enchufe	645675
16	Gancio appendi torcia Accrocheur torche Torch hook Haken fuer brenner Gancho fijacion antorcha	645704
17	Assieme fondo Set chassis Bottom set Bodenteil set Set fondo	645869
18	Protezione scheda Protection fiche Card cover Kartedeckel Proteccion tarjeta	645871
19	Frontale Partie frontal Front panel Gerätefront Frontal	645872
20	Mantello Capot Cover Deckel Panel de cobertura	651258
21	Sportello Guichet Door Tür Portezuela	651259
22	Kit supporto traino Kit support devidoir Wirefeeder holding kit Drahtvorschubhalterungskit Kit sosten alimentador de hilo	982294
23	Kit scheda controllo Kit carte controle Control board kit Steuerungskarte kit Kit tarjeta control	982284
24	Spina atlas 70mmq Fiche atlas 70mmq Plug atlas 70mmq Stecker atlas 70mmq Enchufe atlas 70mmq	804201
25	Rullino traino 4r ø 0.8fe-1.0fe “p-k” Galet 4r ø 0.8fe-1.0fe “p-k” Feed roll 4r ø 0.8fe-1.0fe “p-k” Vorschubrolle 4r ø 0.8fe-1.0fe “p-k” Roldana 4r ø 0.8fe-1.0fe “p-k”	722227
26	Rullino traino 4r ø 1.2fe-1.6fe “p-k” Galet 4r ø 1.2fe-1.6fe “p-k” Feed roll 4r ø 1.2fe-1.6fe “p-k” Vorschubrolle 4r ø 1.2fe-1.6fe “p-k” Roldana 4r ø 1.2fe-1.6fe “p-k”	722241
27	Attacco torcia Attelage torche Torch connection Schlauchpacketanschluss Enghanche antorcha	723067
28	Gruppo traino Dévidoir Wire feed assy Drahtvorschub Arrastre hilo	723096
29	Entrata guidafilo Entree guide fil Wire guide inlet Drahtfuehrungsseeleeingang Entrata vaina guiadera alambre	742064
30	Vite blocca ingranaggio Vis bloc engrenage Gearblocking screw Zahnradhalterschraube Tornillo bloqueo engranaje	742079
31	Guidafilo intermedio Guide fil Wire guide Drahtfuehrungsseele Vaina guiadera alambre	742121
32	Ingranaggio motore Engrenage motor Motor drive gear Motorszahnrad Engranaje motor	742155
33	Adattatore Adapteur Adapter Zahnrad Adaptador	742166
34	Ancora controrullino sinistra Ancre galet gauche Left anchor for pressure roller Linke anker fuer gegenrolle Ancora para contra roldana izquierdo	742167
35	Ancora controrullino destra Ancre galet droite Right anchor for pressure roller Rechte anker fuer gegenrolle Ancora para contra roldana derecho	742168
36	Vite bloccarullino Vis ferme galet Rollerfixing screw Rollerhalterschraube Tornillo bloque roldana	742397
37	Kit aspo 15kg Kit support bobine 15kg Reel kit 15kg Wickler kit 15kg Kit aspa 15kg	981703
38	Kit manopola encoder d.29 Kit poignee encoder d.29 Encoder knob kit d.29 Encodergriff kit d.29 Kit manija encoder d.29	982070
39	Kit guaina entrata motore Kit gaine entree moteur Gas hose kit Drahtfuehrungsseelekit Kit vaina guiadera alambre	990873

Schema elettrico, Schéma électrique, Diagram, Schaltplan, Esquema de conexiones.

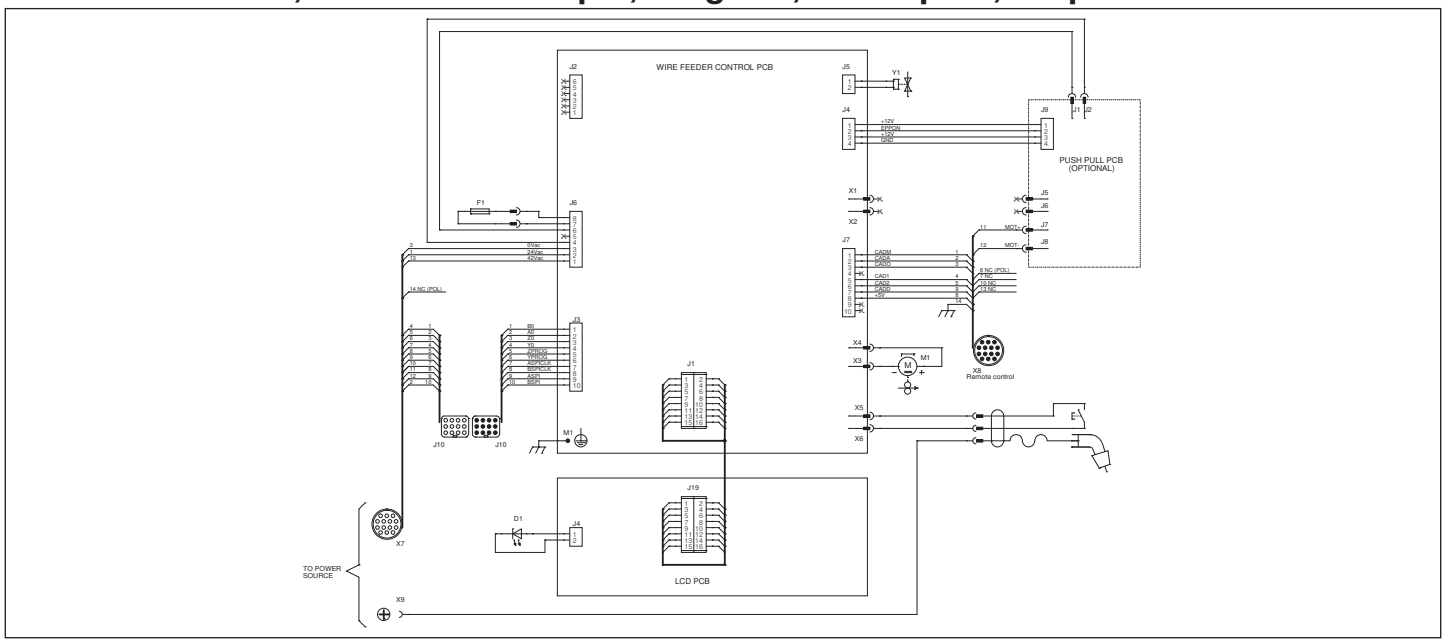

ELENCO PEZZI DI RICAMBIO
LISTE PIECES DETACHEES
SPARE PARTS LIST
ERSATZTEILLISTE
PIEZAS DE REPUESTO

TE 550 WIREFEEDER

Esploso macchina, Dessin appareil, Machine drawing, Explosions Zeichnung des Geräts, Diseño seccionado maquina.

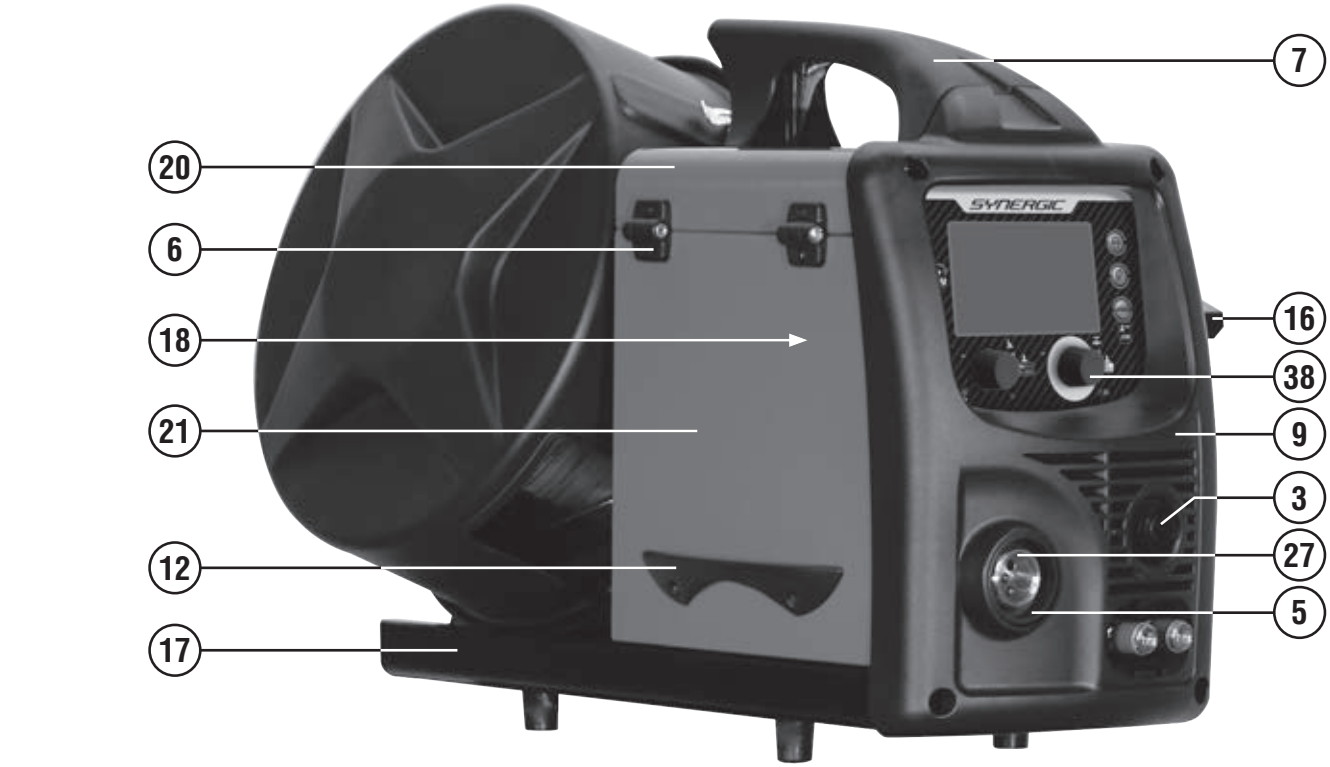

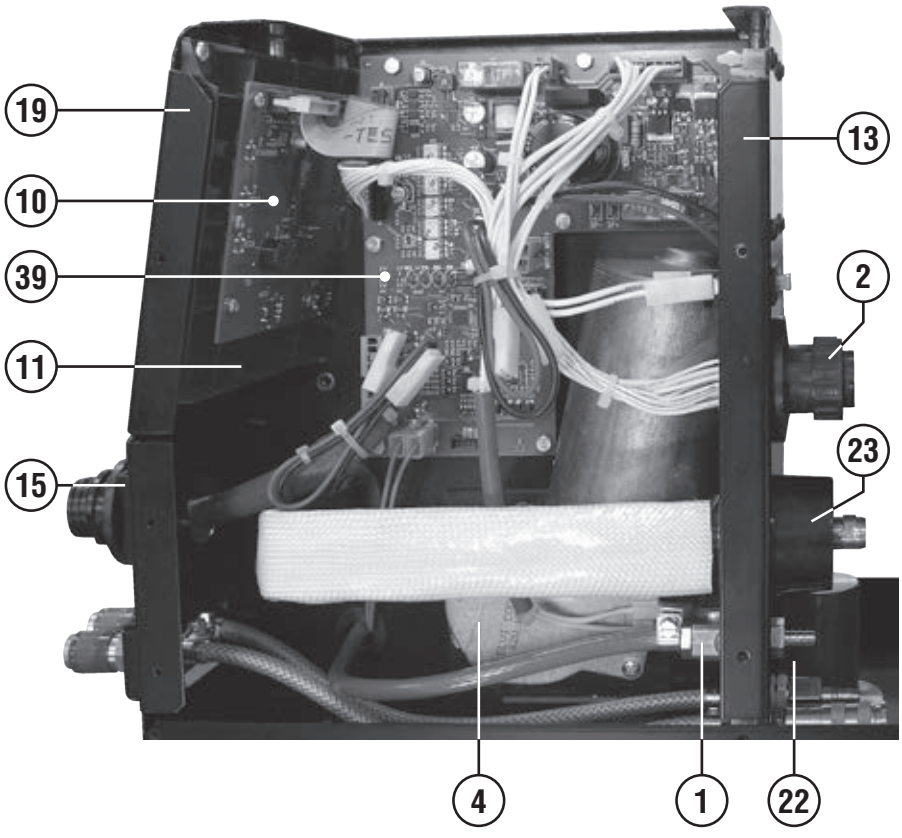

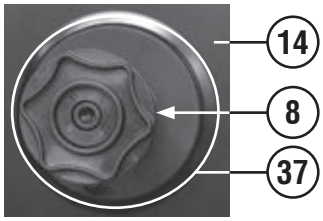

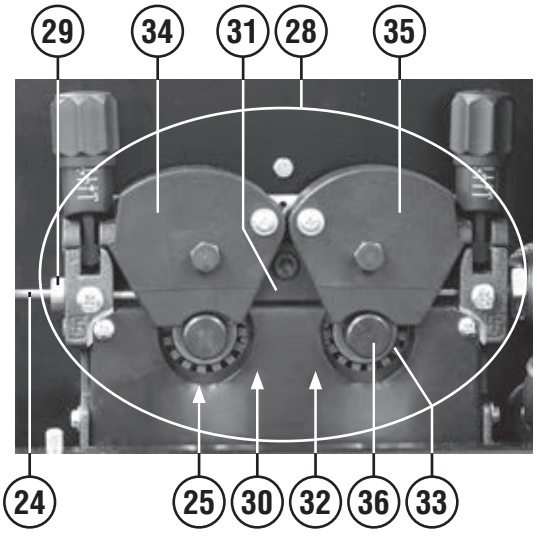

REF.	ELENCO PEZZI DI RICAMBIO PIECES DETACHEES SPARE PARTS LIST ERSATZTEILLISTE PIEZAS DE REPUESTO	CODICE CODE KODE
1	Elettrovalvola Electrovanne Electrovalve Elektroventil Electrovalvula	121801
2	Cablaggio traino Cable devidoir Wirefeeder cable Drahtvorschubskabel Cable alimentador de hilo	125157
3	Cablaggio connettore Cable connecteur Connector cable Anschlusskabel Cable conectador	125156
4	Motorino trainafilo Moteur pour devidoir Wire feed motor Drahtvorschubmotor Motor por arrastre hilo	153029
5	Protezione attacco torcia Support isolant torche Torch connection protection Brennersisolierlager Sosten isolator antorcha	312105
6	Assieme cerniera Charnière set Hinge set Scharnier set Bisagra set	312382
7	Manico Poignee Handle Handgriff Manija	312420
8	Distanziale per aspo Entretoise pour support bobine Reel spacer Distanzstueck Espàciador por aspa	321210
9	Kit frontale Kit partie frontal Front panel kit Gerätefront kit Kit frontal	982293
10	Kit scheda pannello Kit platine frontal Front panel card kit Gerätefrontskarte kit Kit tarjeta frontal	982299
11	Kit supporto display Kit support display Display holder kit Display halterung kit Kit soporte display	982288
12	Maniglia Poignee Handle Handgriff Manija	322590
13	Retro Partie arriere Back panel Rückseite Trasera	642814
14	Staffa Bride Braket Buegel Estribo	645406
15	Supporto presa Support prise Socket holder Steckdose halterung Soporte enchufe	645675
16	Gancio appendi torcia Accrocheur torche Torch hook Haken fuer brenner Gancho fijacion antorcha	645704
17	Assieme fondo Set chassis Bottom set Bodenteil set Set fondo	645869
18	Protezione scheda Protection fiche Card cover Kartedeckel Proteccion tarjeta	645871
19	Frontale Partie frontal Front panel Gerätefront Frontal	645868
20	Mantello Capot Cover Deckel Panel de cobertura	651258
21	Sportello Guichet Door Tür Portezuela	651259
22	Kit supporto traino Kit support devidoir Wirefeeder holding kit Drahtvorschubhalterungskit Kit sosten alimentador de hilo	982294
23	Spina fissa ax mmq.70/95 Fiche atlas ax 70/95 Atlas plug ax 70/95 Atlas stecker ax 70/95 Enchufe atlas ax 70/95	804220
24	Kit guaina entrata motore Kit gaine entree moteur Gas hose kit Drahtfuehrungsseelekit Kit vaina guiadera alambre	990873
25	Rullino traino 4r ø 0.8fe-1.0fe “p-k” Galet 4r ø 0.8fe-1.0fe “p-k” Feed roll 4r ø 0.8fe-1.0fe “p-k” Vorschubrolle 4r ø 0.8fe-1.0fe “p-k” Roldana 4r ø 0.8fe-1.0fe “p-k”	722227
26	Rullino traino 4r ø 1.2fe-1.6fe “p-k” Galet 4r ø 1.2fe-1.6fe “p-k” Feed roll 4r ø 1.2fe-1.6fe “p-k” Vorschubrolle 4r ø 1.2fe-1.6fe “p-k” Roldana 4r ø 1.2fe-1.6fe “p-k”	722241
27	Attacco torcia Attelage torche Torch connection Schlauchpacketanschluss Enghanche antorcha	723067
28	Gruppo traino Dévidoir Wire feed assy Drahtvorschub Arrastre hilo	723096
29	Entrata guidafilo Entree guide fil Wire guide inlet Drahtfuehrungsseeleeingang Entrata vaina guiadera alambre	742064
30	Vite blocca ingranaggio Vis bloc engrenage Gearblocking screw Zahnradhalterschraube Tornillo bloqueo engranaje	742079
31	Guidafilo intermedio Guide fil Wire guide Drahtfuehrungsseele Vaina guiadera alambre	742121
32	Ingranaggio motore Engrenage motor Motor drive gear Motorszahnrad Engranaje motor	742155
33	Adattatore Adapteur Adapter Zahnrad Adaptador	742166
34	Ancora controrullino sinistra Ancre galet gauche Left anchor for pressure roller Linke anker fuer gegenrolle Ancora para contra roldana izquierdo	742167
35	Ancora controrullino destra Ancre galet droite Right anchor for pressure roller Rechte anker fuer gegenrolle Ancora para contra roldana derecho	742168
36	Vite bloccarullino Vis ferme galet Rollerfixing screw Rollerhalterschraube Tornillo bloque roldana	742397
37	Kit aspo 15kg Kit support bobine 15kg Reel kit 15kg Wickler kit 15kg Kit aspa 15kg	981703
38	Kit manopola encoder d.29 Kit poignee encoder d.29 Encoder knob kit d.29 Encodergriff kit d.29 Kit manija encoder d.29	982070
39	Kit scheda controllo Kit carte controle Control board kit Steuerungskarte kit Kit tarjeta control	982284

Schema elettrico, Schéma électrique, Diagram, Schaltplan, Esquema de conexiones.

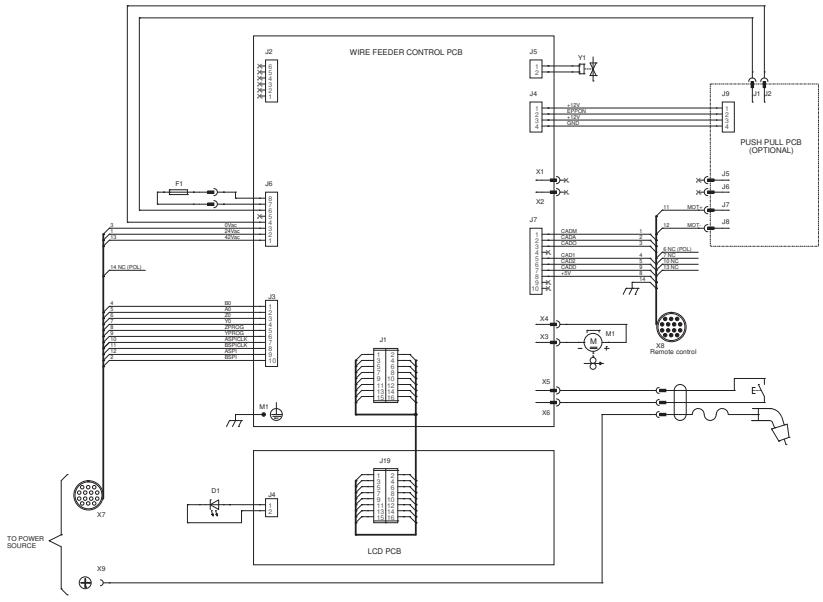

ELENCO PEZZI DI RICAMBIO
LISTE PIECES DETACHEES
SPARE PARTS LIST
ERSATZTEILLISTE
PIEZAS DE REPUESTO

G.R.A. 5500

TELWIN®

Esploso macchina, Dessin appareil, Machine drawing, Explosions Zeichnung des Geräts, Diseño seccionado maquina.

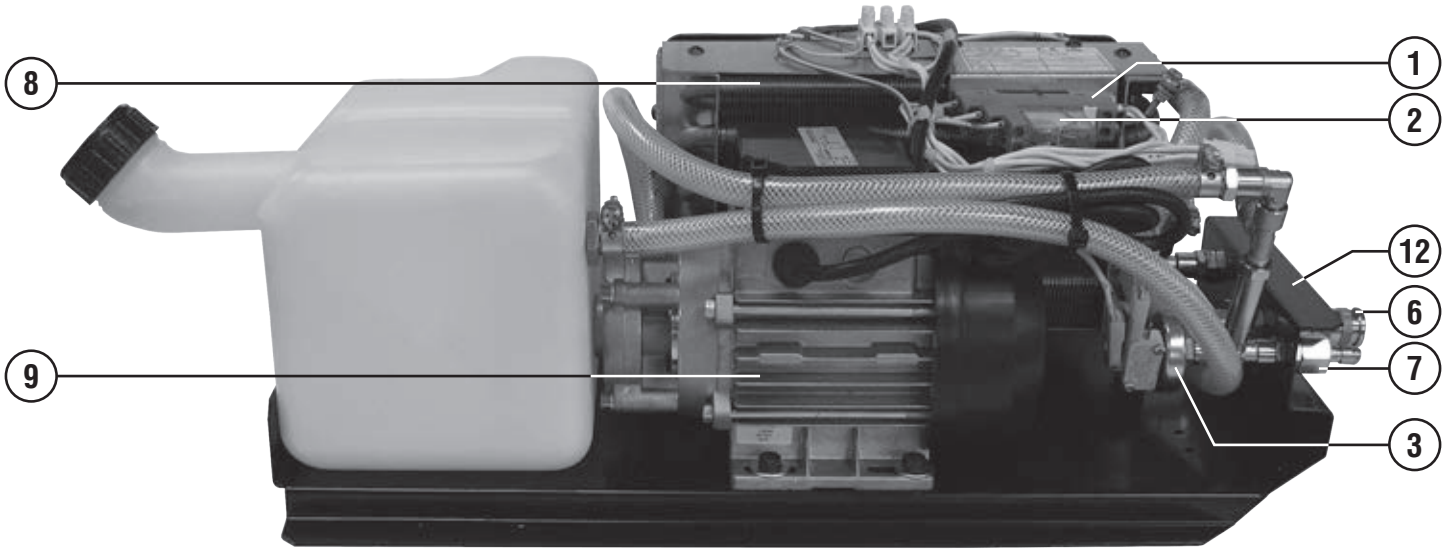

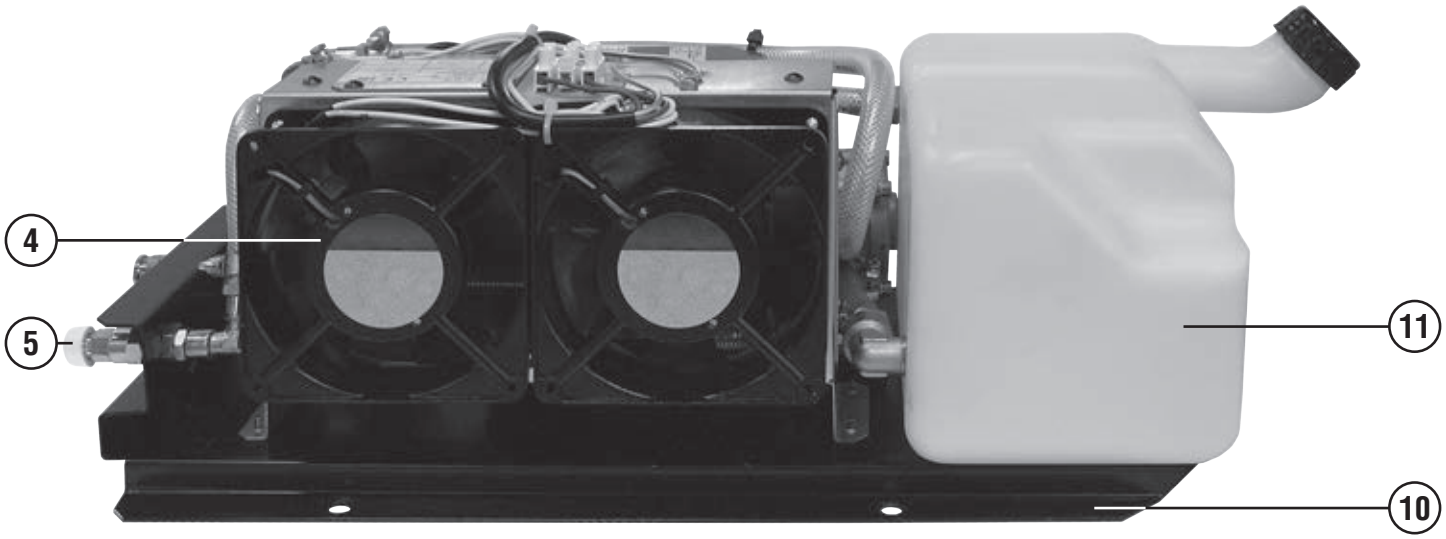

REF.	ELENCO PEZZI DI RICAMBIO PIECES DETACHEES SPARE PARTS LIST ERSATZTEILLISTE PIEZAS DE REPUESTO	CODICE CODE KODE
1	Base Base Basis Basis Base	112482
2	Rele' Relais Relais Relais Relais	116154
3	Pressostato Pressostat Pressure switch Druckanzeige Presostato	121750
4	Ventilatore Ventilateur Fan Ventilator Ventilador	152101
5	Valvola Vanne Valve Ventil Valvula	602261
6	Attacco rapido Embout rapide Quick connection Schnellanschluss Enchufe	602131
7	Attacco rapido Embout rapide Quick connection Schnellanschluss Conexion rapida	602033
8	Radiatore gra Radiateur gra Gra radiator Gra radiator Radiator gra	602312
9	Elettropompa Pompe electrique Electric pump Elektropump Bomba electrica	602259
10	Fondo Chassis Bottom Bodenteil Fondo	645875
11	Kit serbatoio Kit reservoir Tank kit Behaelter kit Kit tanque	981006
12	Staffa Bride Braket Bügel Estribo	645877

REF.	ELENCO PEZZI DI RICAMBIO PIECES DETACHEES SPARE PARTS LIST ERSATZTEILLISTE PIEZAS DE REPUESTO	CODICE CODE KODE

REF.	ELENCO PEZZI DI RICAMBIO PIECES DETACHEES SPARE PARTS LIST ERSATZTEILLISTE PIEZAS DE REPUESTO	CODICE CODE KODE

Schema elettrico, Schéma électrique, Diagram, Schaltplan, Esquema de conexiones.

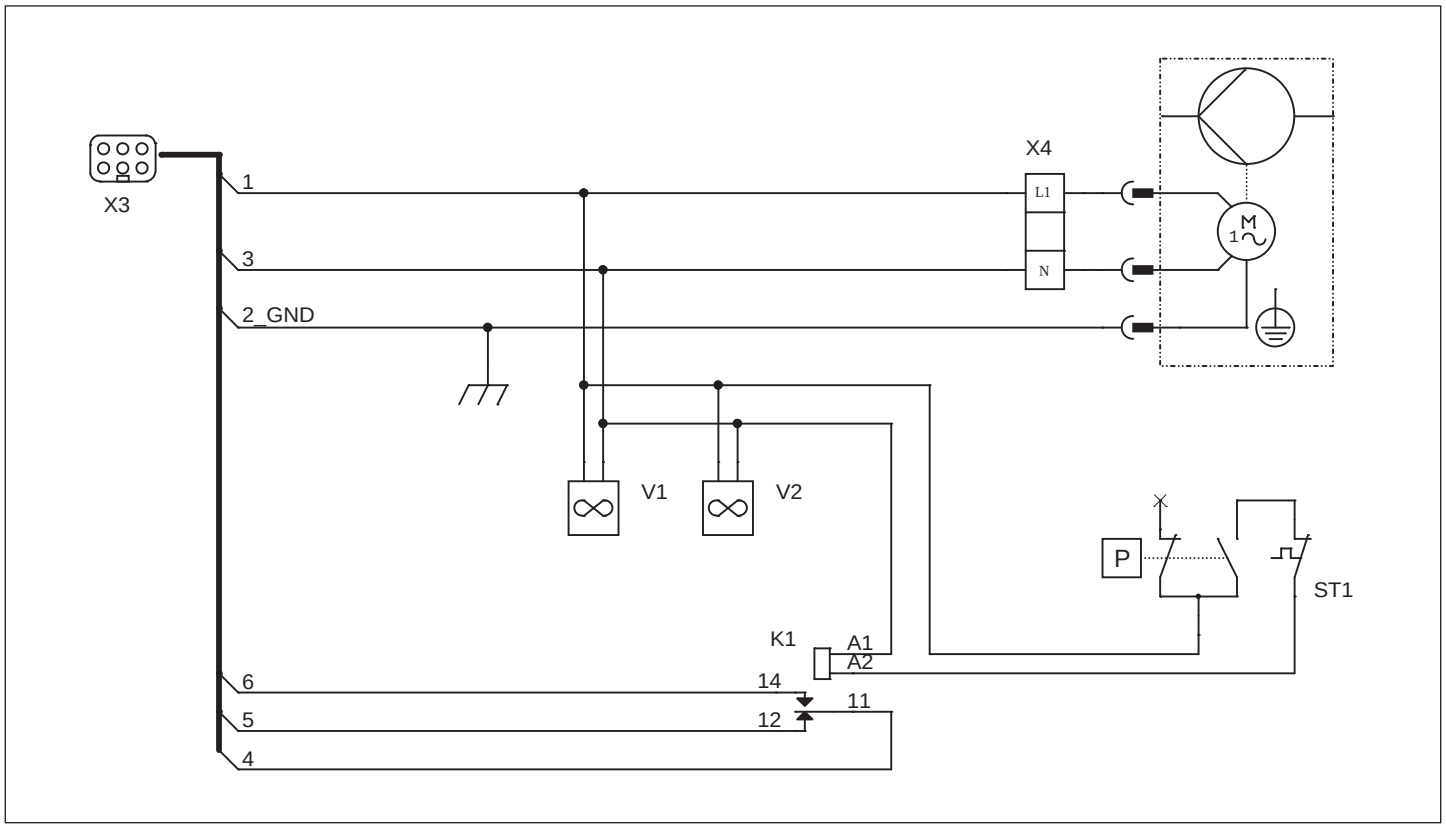

ELENCO PEZZI DI RICAMBIO
LISTE PIECES DETACHEES
SPARE PARTS LIST
ERSATZTEILLISTE
PIEZAS DE REPUESTO

ELECTROMIG 230 WAVE

Esploso macchina, Dessin appareil, Machine drawing, Explosions Zeichnung des Geräts, Diseño seccionado maquina.

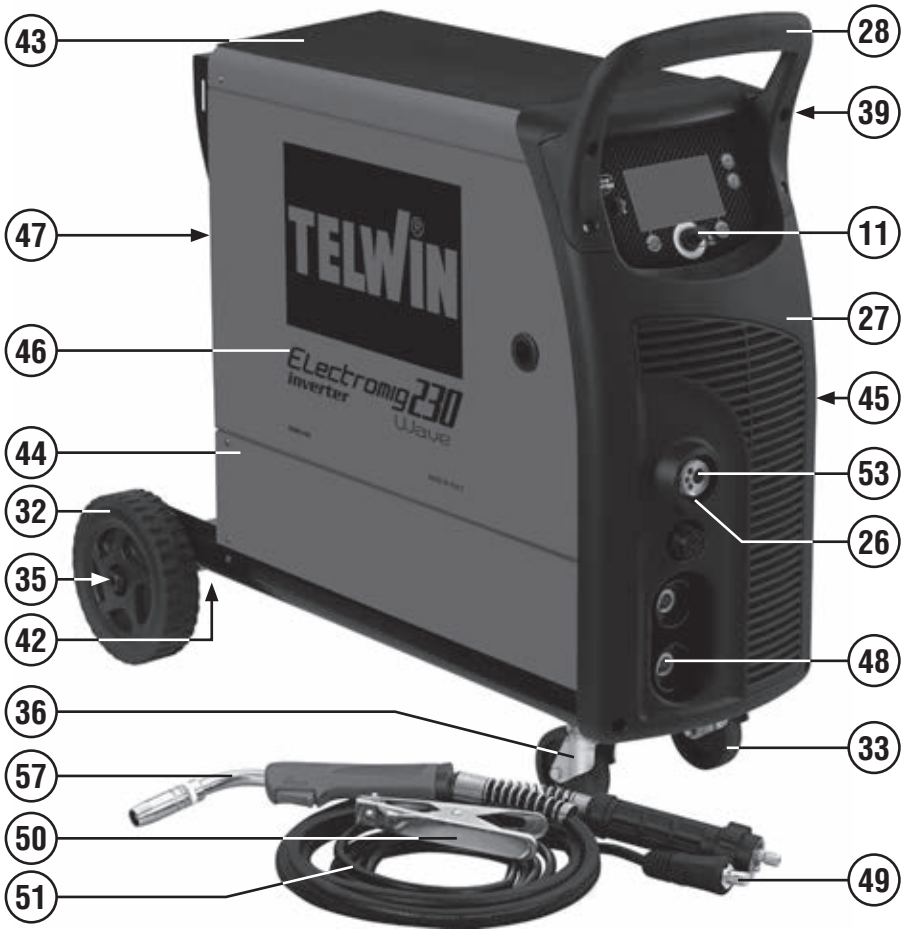

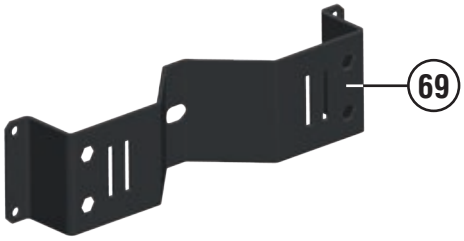

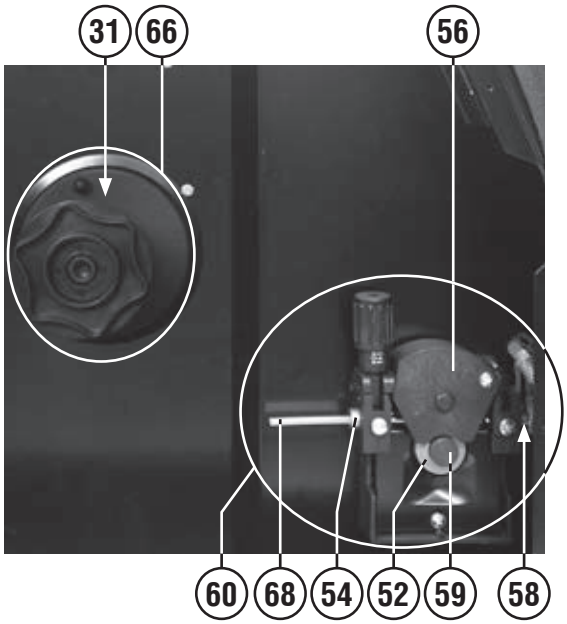

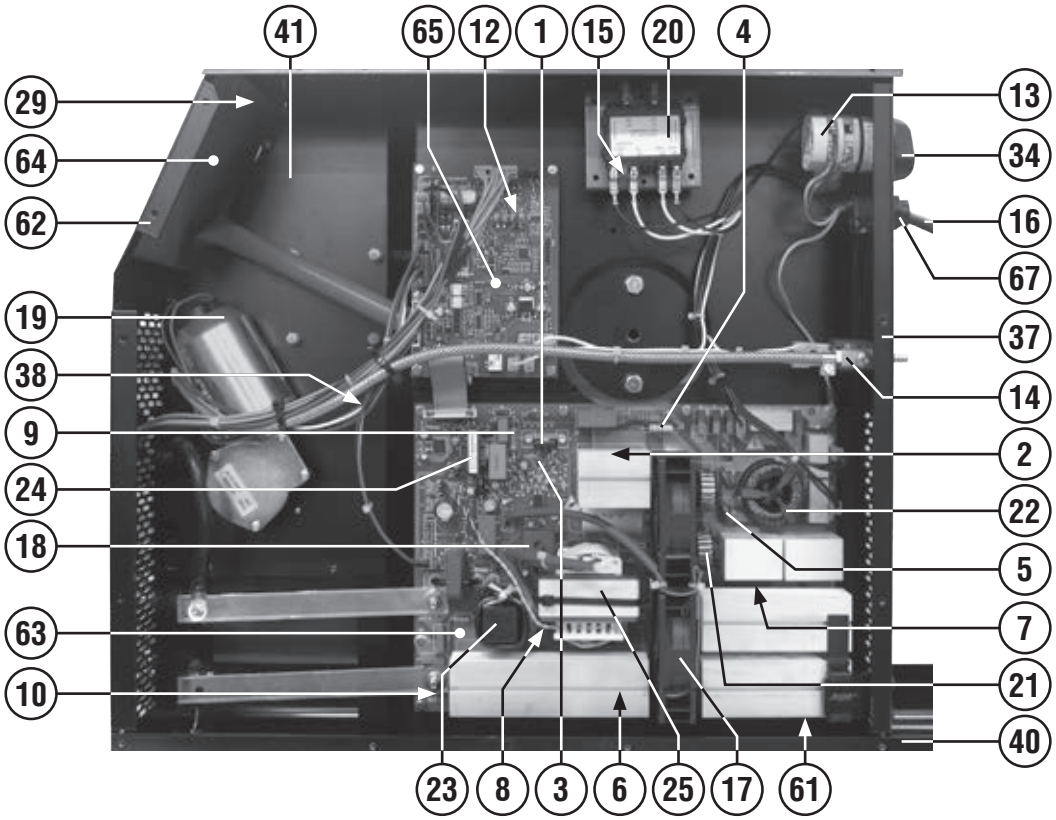

REF.	ELENCO PEZZI DI RICAMBIO PIECES DETACHEES SPARE PARTS LIST ERSATZTEILLISTE PIEZAS DE REPUESTO	CODICE CODE KODE
1	Igbt Igbt Igbt Igbt Igbt	111095
2	Ponte monofase Pont monophase Single phase bridge Einfasige brücke Puente monofasico	111259
3	Pwm controller Pwm controller Pwm controller Pwm controller Pwm controller	116630
4	Resistenza Resistance Resistance Widerstand Resistencia	116752
5	Varistore Varistor Varistor Varistor Varistor	116760
6	Diodo Diode Diode Diode Diodo	116839
7	Condensatore Condensateur Condenser Kondensator Condensator	116882
8	Soppressore di tensione Soppresseur de tension Voltage suppressor Spannungssoppressor Sopresor de tension	116935
9	Res. Met. 10r 2w 5% fuse Res. Met. 10r 2w 5% fuse Res. Met. 10r 2w 5% fuse Res. Met. 10r 2w 5% fuse Res. Met. 10r 2w 5% fuse	116962
10	Termostato Thermostat Thermal switch Thermostat Termostato	121261
11	Encoder Encoder Encoder Encoder Encoder	121756
12	Fusibile Fusible Fuse Sicherung Fusible	121456
13	Commutatore Commutateur Switch Schalter Switch	121556
14	Elettrovalvola Electrovanne Electrovalve Elektroventil Electrovalvula	121800
15	Fusibile Fusible Fuse Sicherungsdraht Fusible	122742
16	Cavo alimentazione 2,5m Cable alimentation 2,5 m Mains cable 2,5 m Netzkabel 2,5 m Cable alimentador 2,5 m	132412
17	Ventilatore Ventilateur Fan Ventilator Ventilador	152006
18	Ta Ta Ta Ta Ta	152296
19	Motoriduttore 24vdc + sensore hall Motoriducteur 24vdc + sonde hall Motoreducer 24vdc + hall sonde Motoriduktor 24vdc + hall probe Motoriductor 24vdc + sonda hall	153053
20	Trasformatore ausiliario Transformateur auxiliaire Auxiliary transformer Hilfstransformator Transformador ausiliario	164270
21	Induttanza Inductance Inductance Drossel Induccion	169746
22	Induttanza filtro Inductance filtre Filter inductor Filterdrossel Filtro induccion	169747
23	Induttanza uscita Inductance output Output inductance Output drossel Induccion output	169808
24	Trasformatore flyback ausiliario Transformateur flyback auxiliaire Flyback auxiliary transformer Flyback hilfstransformator Transformador flyback auxiliar	169862
25	Trasformatore Transformateur Transformer Transformator Transformador	169863
26	Protezione attacco torcia Support isolant torche Torch connection protection Brennersisolierlager Sosten isolator antorcha	312105
27	Frontale Partie frontal Front panel Geraetefront Frontal	321136
28	Assieme manico Set poignee Handle set Handgriff set Set manija	321165
29	Kit supporto display Kit support display Display holder kit Display halterung kit Kit soporte display	981810
31	Distanziale per aspo Entretoise pour support bobine Reel spacer Distanzstueck Espàciador por aspa	321210
32	Ruota fissa Roue fixe Fixed wheel Fixes rad Rueda firme	322201
33	Ruota Roue Wheel Rad Rueda	322245
34	Assieme manopola per commutatore Set poigne pour commutateur Switch knob set Umschaltergriff set Set manija para conmutador	323101
35	Asse ruote Axe roues Wheels axle Radachse Eje ruedas	681065
36	Supporto girevole + freno Support tournant + frein Swivel support + brake Drehbarerhalter + bremse Sosten giratorio + freno	484688
37	Retro Partie arriere Back panel Rueckseite Trasera	642478
38	Fusibile Fusible Fuse Sicherung Fusible	122434
39	Gancio appendi torcia Accrocheur torche Torch hook Haken fuer brenner Gancho fijacion antorcha	645704
40	Fondo Chassis Bottom Bodenteil Fondo	645858
41	Diaframma Diaphragme Diaphragm Diaphragma Diafragma	645711
42	Staffa asse ruote Bride axe roues Wheels axle braket Radachsebuegel Estribo eje ruedas	645715
43	Kit mantello Kit capot Cover kit Deckelkit Kit panel de cobertura	981740
44	Fianco destro Partie lateral droite Right side panel Rechte seite Flanco derecho	651221
45	Fianco sx Partie lateral Side panel Linkes seitenteil Panel izquierdo	656180
46	Sportello Guichet Door Tuer Portezuela	656181
47	Perno sportello Pivot guichet Door pin Tuerzapfen Perno portezuela	691012
48	Presa atlas 50mmq Prise atlas 50mmq Atlas socket 50mmq Atlas steckdose 50mmq Enchufe atlas 50mmq	712036
49	Spina atlas 50mmq Fiche atlas 50mmq Atlas plug 50mmq Atlas stecker 50mmq Enchufe atlas 50mmq	712040
50	Toledo 300 pinza di massa 300a Toledo 300 borne de masse 300a Toledo 300 work clamp 300a Toledo 300 masseklemme 300a Toledo 300 borne de masa 300a	712231
51	Cavo 25mmq 3m-pinza massa-atlas 50mmq Cable 25mmq 3m-pince masse-atlas 50mmq Cable 25mmq 3m-work clamp-atlas 50mmq Kabel 25mmq 3m-massezange-atlas 50mmq Cable 25mmq 3m-pinca masa-atlas 50mmq	713192
52	Rullino traino 2r 0,6fe-0,8fe "f" Galet 2r 0,6fe-0,8fe "f" Feed roll 2r 0,6fe-0,8fe "f" Vorschubrolle 2r 0,6fe-0,8fe "f" Roldana 2r 0,6fe-0,8fe "f"	722112
53	Attacco torcia Attelage torche Torch connection Brenneranschluss Enganche soplete	723229
54	Entrata guidafilo Entree guide fil Wire guide inlet Drahtfuehrungsseeleeingang Entrata vaina guiadera alambre	742064
55	Rullino traino 2r 0,8al-1,0al "f" Galet 2r 0,8al-1,0al "f" Feed roll 2r 0,8al-1,0al "f" Vorschubrolle 2r 0,8al-1,0al "f" Roldana 2r 0,8al-1,0al "f"	742090
56	Ancora controrullino Ancre contre-galet Anchor for pressure roller Anker für gegenrolle Ancora para contra roldana	742096
57	Mt25 torcia mig 3m Mt25 torche mig 3m Mt25 mig torch 3m Mt25 mig brenner 3m Mt25 antorcha mig 3m	742183
58	Tubo capillare ø 2x5 Tuyau capillaire ø 2x5 Wire conduit ø 2x5 Kapillarrohr ø 2x5 Tubo capilar ø 2x5	742365
59	Vite bloccarullino Vis ferme galet Rollerfixing screw Rollerhalterschraube Tornillo bloque roldana	742397
60	Kit traino due rulli Kit devidoir 2 roleaux Kit 2 rolls wirefeeder Kit 2 raeder drahtvorschub Kit alimentador de hilo 2 rollos	981496
61	Kit igbt + diodo Kit igbt + diode Igbt + diode kit Igbt + diode kit Kit igbt + diodo	981698
62	Kit frontale Kit partie frontal Front panel kit Geraetefront kit Kit frontal	981699
63	Kit scheda potenza Kit fiche puissance Power pcb kit Leistungskarte kit Kit tarjeta potencia	981700
64	Kit scheda tft Kit platine tft Tft card kit Tft karte kit Kit tarjeta tft	981701

REF.	ELENCO PEZZI DI RICAMBIO PIECES DETACHEES SPARE PARTS LIST ERSATZTEILLISTE PIEZAS DE REPUESTO	CODICE CODE KODE
65	Kit scheda controllo Kit fiche de controle Control pcb kit Kontrollekarte kit Kit tarjeta de controlo	981702
66	Kit aspo 15kg Kit support bobine 15kg Reel kit 15kg Wickler kit 15kg Kit aspa 15kg	981703
67	Kit pressacavo + ghiera Kit presse cable + embout Kit cable bushing + ring nut Kit kabelhalter + nutmutter Kit prensa cable + virola	990046
68	Kit guaina entrata motore Kit gaine entree moteur Gas hose kit Drahtfuehrungsseelekit Kit vaina guiadera alambre	990097
69	Staffa portabombola Etrier porte-bouteille Bottle-holder bracket Kasten fuer flasche Estribo porta bombona	645673

REF.	ELENCO PEZZI DI RICAMBIO PIECES DETACHEES SPARE PARTS LIST ERSATZTEILLISTE PIEZAS DE REPUESTO	CODICE CODE KODE

REF.	ELENCO PEZZI DI RICAMBIO PIECES DETACHEES SPARE PARTS LIST ERSATZTEILLISTE PIEZAS DE REPUESTO	CODICE CODE KODE

Schema elettrico, Schéma électrique, Diagram, Schaltplan, Esquema de conexiones.

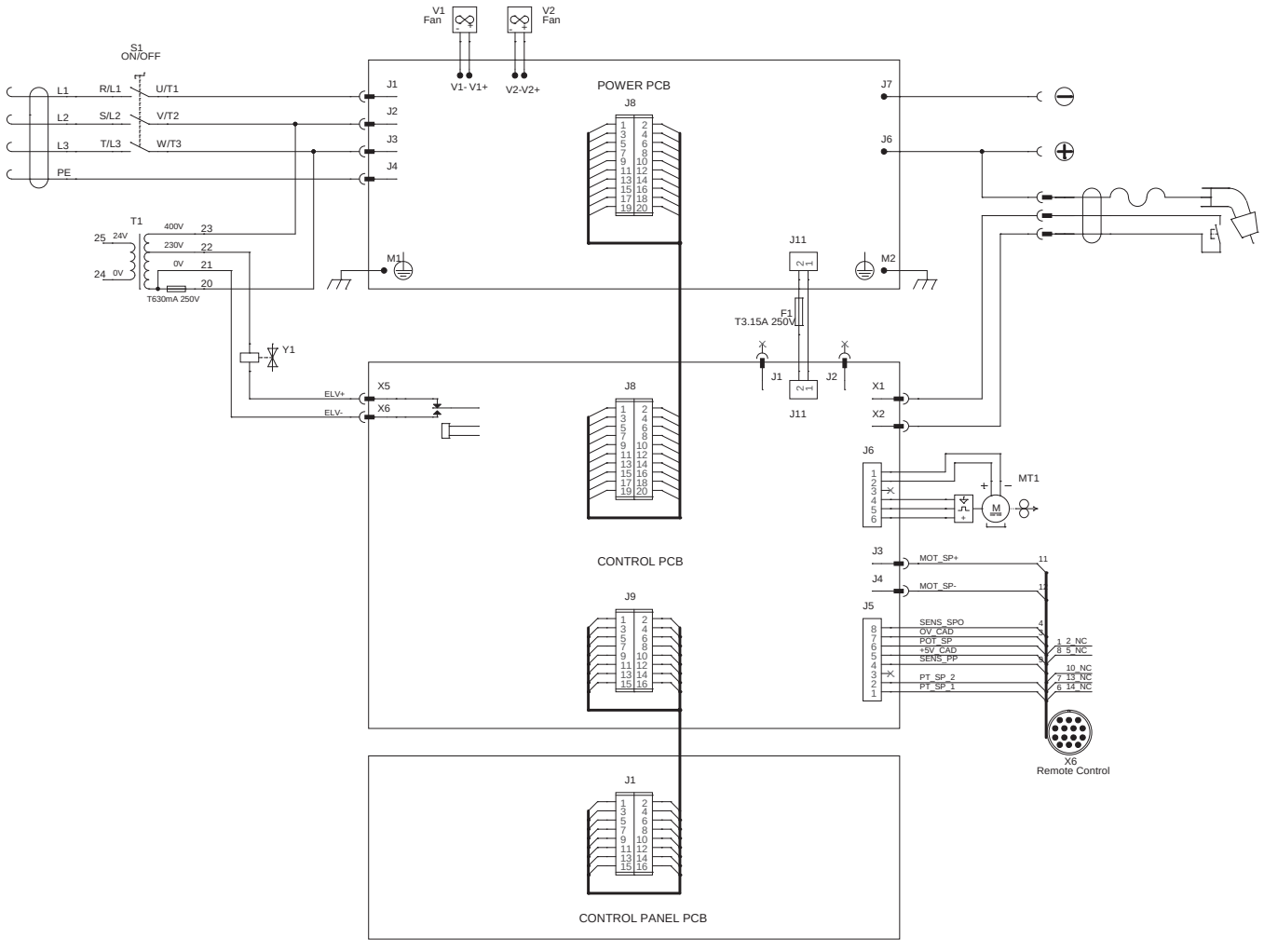

Esploso torcia, Dessin torche, Torch drawing, Schlauchpaket - Explosionszeichnung, Diseño seccionado antorcha.

742183 3m
742184 4m
742185 5m

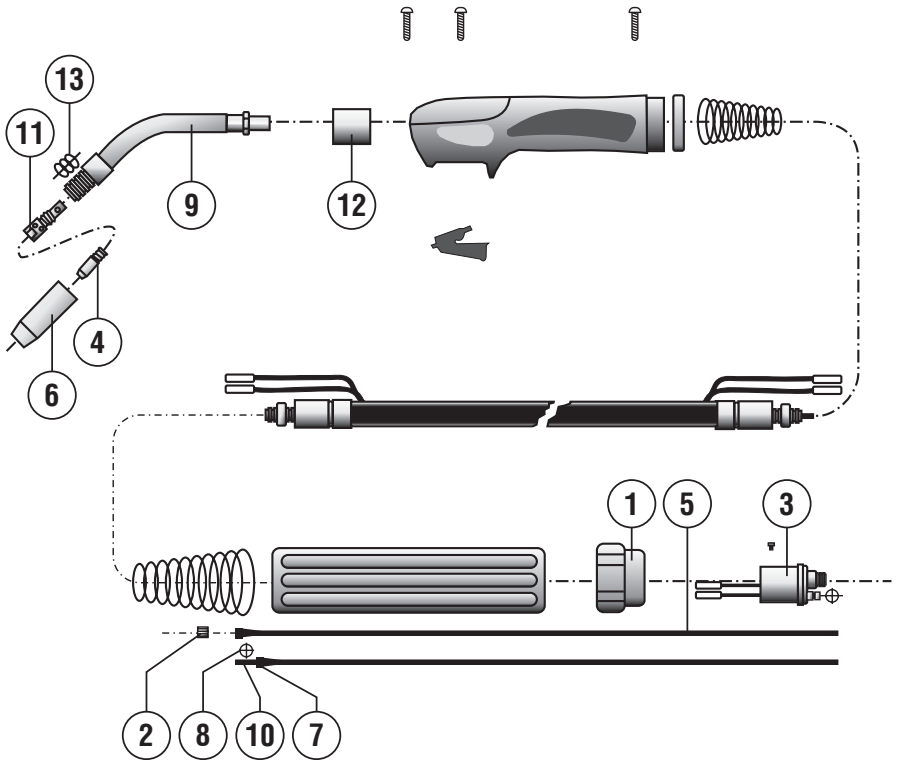

REF.	ELENCO PEZZI RICAMBIO TORCIA LISTE PIECES DETACHEES TORCHE SPARE PARTS LIST TORCH ERSATZTEILLISTE SCLAUCHPAKET PIEZAS DE REPUESTO ANTORCHA	CODICE CODE KODE
1	Ghiera fissaggio Embout fixage Ring nut Nutmutter Virola por fiyacion	722007
2	Dado fissaggio guaina Ecrou fixage gaine Liner nut Befestigungsmutter Dado por fiyacion vaina	722013
3	Corpo torcia Corp de torche Torch assy Brennerskörper Enganche antorcha	722441
4	Tubetto di contatto d. 1,2 Mm fe Tube contact d. 1,2 Mm fe Contact tip d. 1,2 Mm fe Kontaktdüse d. 1,2 Mm fe Tubito de contacto d. 1,2 Mm fe	722682
4	Tubetto di contatto d. 1 Mm fe m6 l=28mm Tube contact d. 1 Mm fe m6 l=28mm Contact tip d. 1 Mm fe m6 l=28mm Kontaktdüse d. 1 Mm fe m6 l=28mm Tubito de contacto d. 1 Mm fe m6 l=28mm	722681
4	Tubetto di contatto d. 0,8 Mm m6 Tube contact d. 0,8 Mm m6 Contact tip d. 0,8 Mm m6 Kontaktdüse d. 0,8 Mm m6 Tubito de contacto d. 0,8 Mm m6	722680
4	Tubetto di contatto d. 1,2 Mm al/flux m6 Tube contact d. 1,2 Mm al/flux m6 Contact tip d. 1,2 Mm al/flux m6 Kontaktdüse d. 1,2 Mm al/flux m6 Tubito de contacto d. 1,2 Mm al/flux m6	722553
4	Tubetto di contatto d. 1 Mm al/flux m6 Tube contact d. 1 Mm al/flux m6 Contact tip d. 1 Mm al/flux m6 Kontaktdüse d. 1 Mm al/flux m6 Tubito de contacto d. 1 Mm al/flux m6	722552
4	Tubetto di contatto d. 0,6 Mm fe Tube contact d. 0,6 Mm fe Contact tip d. 0,6 Mm fe Kontaktdüse d. 0,6 Mm fe Tubito de contacto d. 0,6 Mm fe	722415
5	Guaina guidafilo ø0.6-0.8 3m blu Gaine pour fil ø0.6-0.8 3m bleu Wire guide hose ø0.6-0.8 3m blue Drahtführungsseele ø0.6-0.8 3m blue Vaina guia hilo ø0.6-0.8 3m blue	722437
5	Guaina guidafilo ø1.0-1.2 3m rossa Gaine pour fil ø1.0-1.2 3m rouge Wire guide hose ø1.0-1.2 3m red Drahtführungsseele ø1.0-1.2 3m rot Vaina guia hilo ø1.0-1.2 3m roja	722689
5	Guaina guidafilo ø1.0-1.2 4m al Gaine pour fil ø 1.0-1.2 4m al Wire guide hose ø 1.0-1.2 4m al Drahtführungsseele ø 1.0-1.2 4m al Vaina guia hilo ø 1.0-1.2 4m al	742984

REF.	ELENCO PEZZI RICAMBIO TORCIA LISTE PIECES DETACHEES TORCHE SPARE PARTS LIST TORCH ERSATZTEILLISTE SCLAUCHPAKET PIEZAS DE REPUESTO ANTORCHA	CODICE CODE KODE
6	Ugello cilindrico mt25 Buse cylindrique mt25 Cylindrical nozzle mt25 Zylindrische düse mt25 Inyector cilindrico mt25	722684
6	Ugello conico mt25 Buse conique mt25 Conical nozzle mt25 Konische düse mt25 Inyector conico mt25	722685
6	Ugello testa fine mt25 Buse a tete fine mt25 Thin headed nozzle mt25 Verengte düse mt25 Inyector cabeza fina mt25	722686
6	Ugello per puntatura d. 18 Mm Buse pointage d. 18 Mm Spot welding nozzle d. 18 Mm Punktschweissgasdüse d. 18 Mm Inyector por puntos d. 18 Mm	722687
7	Nipples ferma guaina Nipples serre gaine Wire guide locking nipples Drahtseeleklemmnipples Nipples de bloqueo vaina	722598
8	Anello or Bague or Or ring Or ring Anillo or	722601
8	Anello or Anneau or Or ring Or ring Anillo or	722606
9	Lancia mt25 Lance mt25 Swan neck mt25 Brennerhals mt25 Encorvado mt25	722696
10	Tubetto ferma guaina Tuyau serre gaine Wire guide locking tube Drahtseeleklemmrohr Tubito de bloqueo vaina	722600
11	Diffusore gas mt25 Diffuseur gaz mt25 Gas diffuser mt25 Gasdiffusor mt25 Diffusor gas mt25	722688
12	Isolante corpo torcia Isolant corps de torche Torch connection insulation Brenneranschlussblock isolierteil Aislador cuerpo de antorcha	722693
13	Molla per ugello mt25 Ressort pour buse mt25 Nozzle spring mt25 Düsenfeder mt25 Muelle por inyector mt25	722690

REF.	ELENCO PEZZI RICAMBIO TORCIA LISTE PIECES DETACHEES TORCHE SPARE PARTS LIST TORCH ERSATZTEILLISTE SCLAUCHPAKET PIEZAS DE REPUESTO ANTORCHA	CODICE CODE KODE

ELENCO PEZZI DI RICAMBIO
LISTE PIECES DETACHEES
SPARE PARTS LIST
ERSATZTEILLISTE
PIEZAS DE REPUESTO

ELECTROMIG 330 WAVE

TELWIN®

Esploso macchina, Dessin appareil, Machine drawing, Explosions Zeichnung des Geräts, Diseño seccionado maquina.

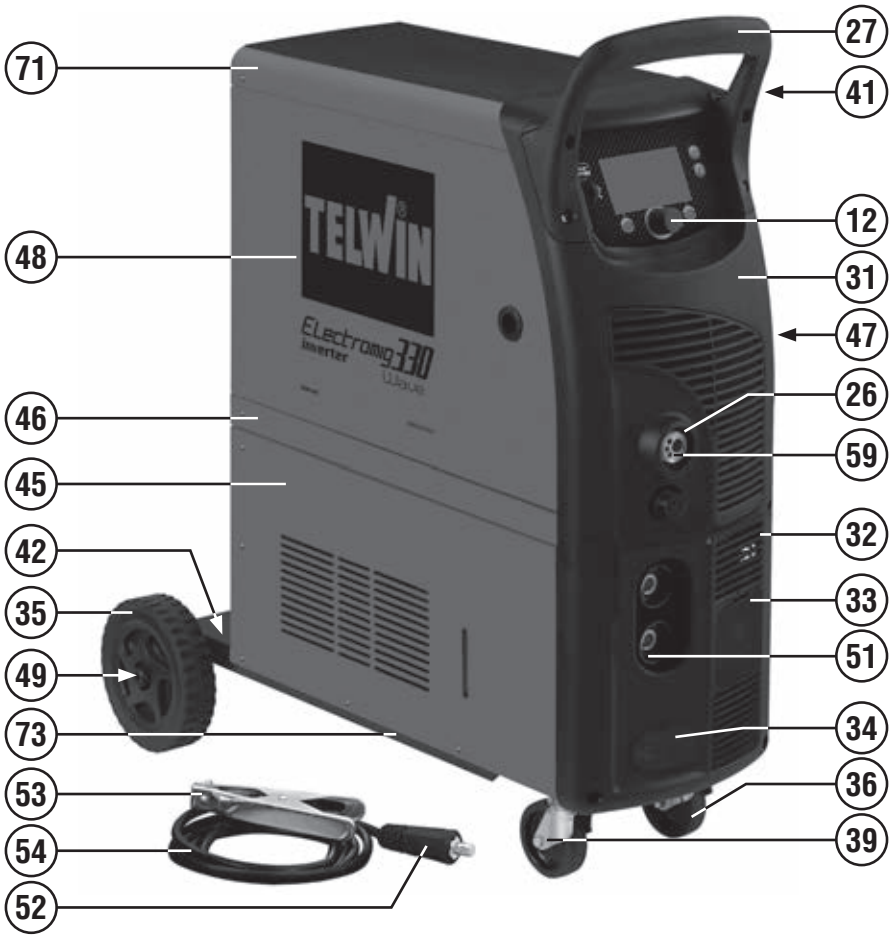

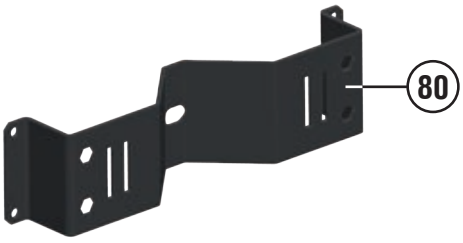

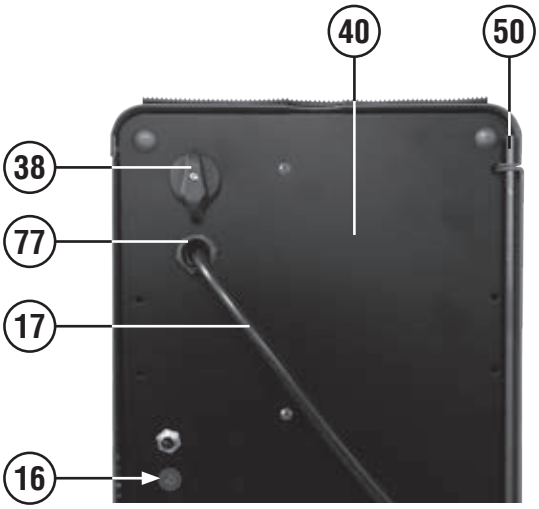

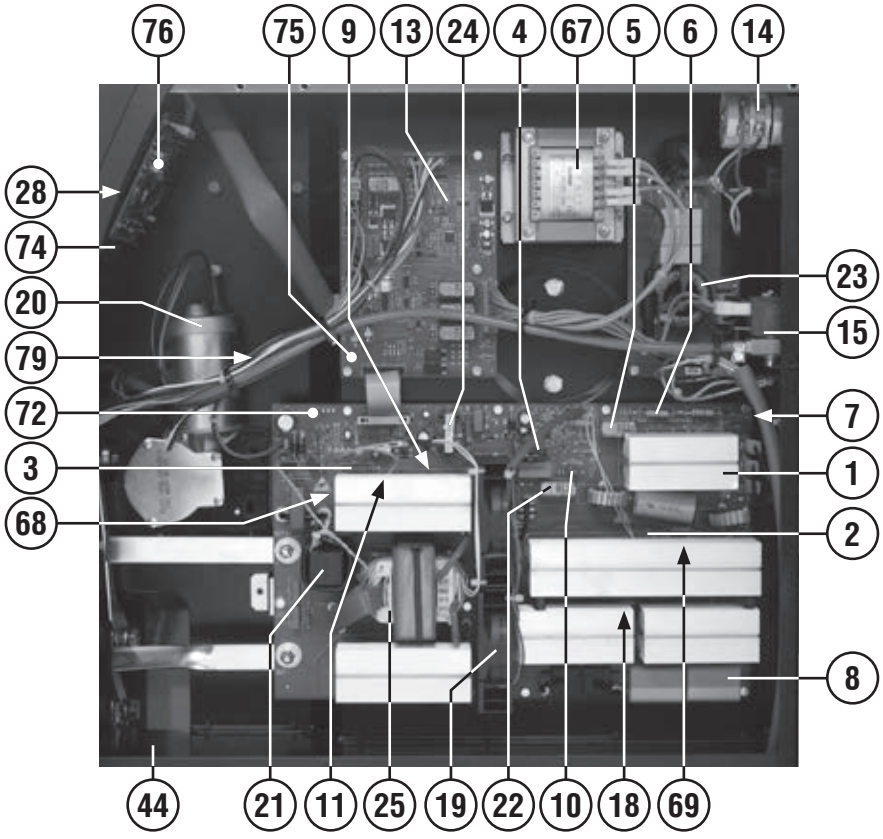

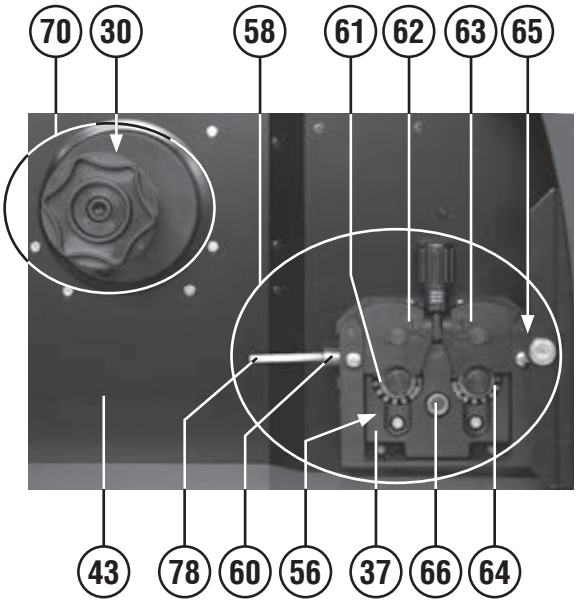

REF.	ELENCO PEZZI DI RICAMBIO PIECES DETACHEES SPARE PARTS LIST ERSATZTEILLISTE PIEZAS DE REPUESTO	CODICE CODE KODE
1	Ponte monofase Pont monophase Single phase bridge Einfasige brücke Puente monofasico	111017
2	Res. Met. 22r 5w 5% Res. Met. 22r 5w 5% Res. Met. 22r 5w 5% Res. Met. 22r 5w 5% Res. Met. 22r 5w 5%	111327
3	Res. Met. 10r 5w 5% Res. Met. 10r 5w 5% Res. Met. 10r 5w 5% Res. Met. 10r 5w 5% Res. Met. 10r 5w 5%	112374
4	Igbt Igbt Igbt Igbt Igbt	111094
5	Rele' Relais Relais Relais Relais	116320
6	Resistenza Resistance Resistance Widerstand Resistencia	116752
7	Varistore Varistor Varistor Varistor Varistor	116760
8	Condensatore Condensateur Condenser Kondensator Condensator	116882
9	Soppressore di tensione Soppresseur de tension Voltage suppressor Spannungssoppressor Sopresor de tension	116935
10	Res. Met. 10r 2w 5% fuse Res. Met. 10r 2w 5% fuse Res. Met. 10r 2w 5% fuse Res. Met. 10r 2w 5% fuse Res. Met. 10r 2w 5% fuse	116962
11	Termostato Thermostat Thermal switch Thermostat Termostato	121261
12	Encoder Encoder Encoder Encoder Encoder	121756
13	Fusibile Fusible Fuse Sicherung Fusible	121456
14	Commutatore Commutateur Switch Schalter Switch	121556
15	Elettrovalvola Electrovanne Electrovalve Elektroventil Electrovalvula	121800
16	Fusibile Fusible Fuse Sicherung Fusible	122437
17	Cavo alim. 4g1.5 2 M Cable alim. 4g1.5 2 M Mains cable 4g1.5 2 M Netzkabel 4g1.5 2 M Cable alim. 4g1.5 2 M	132237
18	Trasformatore di corrente Transformateur de courant Current transformer Stromwandler Transformador de corriente	152230
19	Ventilatore Ventilateur Fan Ventilator Ventilador	152269
20	Motoriduttore 24vdc + sensore hall Motoriducteur 24vdc + sonde hall Motoreducer 24vdc + hall sonde Motoriduktor 24vdc + hall probe Motoriductor 24vdc + sonda hall	153053
21	Induttanza Inductance Inductance Drossel Induccion	169556
22	Induttanza Inductance Inductance Drossel Induccion	169746
23	Induttanza filtro Inductance filtre Filter inductor Filterdrossel Filtro induccion	169747
24	Trasformatore flyback ausiliario Transformateur flyback auxiliaire Flyback auxiliary transformer Flyback hilfstransformator Transformador flyback auxiliar	169862
25	Trasformatore potenza Transformateur de puissance Power trafo Leistungstransformer Transformador de potencia	169887
26	Protezione attacco torcia Support isolant torche Torch connection protection Brennersisolierlager Sosten isolator antorcha	312105
27	Assieme manico Set poignee Handle set Handgriff set Set manija	321165
28	Kit supporto display Kit support display Display holder kit Display halterung kit Kit soporte display	981810
30	Distanziale per aspo Entretoise pour support bobine Reel spacer Distanzstueck Espàciador por aspa	321210
31	Frontale superiore Partie frontal superieur Upper front panel Obere geraetefront Frontal superior	321231
32	Frontale inferiore Partie frontal inferieur Lower front panel Geraetefront unten Frontal inferior	321232
33	Tappo Bouchon Cap Stopfen Tapon	321233
34	Tappo Bouchon Cap Stopfen Tapon	321234
35	Ruota Roue Wheel Rad Rueda	321390
36	Ruota Roue Wheel Rad Rueda	322245
37	Protezione Protecion Cover Deckel Proteccion	322814
38	Assieme manopola per commutatore Set poigne pour commutateur Switch knob set Umschaltergriff set Set manija para conmutador	323101
39	Supporto girevole + freno Support tournant + frein Swivel support + brake Drehbarerhalter + bremse Sosten giratorio + freno	484688
40	Retro Partie arriere Back panel Rueckseite Trasera	642516
41	Gancio appendi torcia Accrocheur torche Torch hook Haken fuer brenner Gancho fijacion antorcha	645704
42	Staffa asse ruote Bride axe roues Wheels axle braket Radachsebuegel Estribo eje ruedas	645715
43	Diaframma Diaphragme Diaphragm Diaphragma Diafragma	645745
44	Ripiano Surface Surface Deckel Plano	645747
45	Fianco destro Partie laterale droit Side panel right Seitenblech recht Panel derecho	656206
46	Vano aspo Support bobine vain Reel space Wickler raum Espacio aspa	651240
47	Fianco sinistro Partie lateral gauche Left panel Links seitenblech Flanco isquierdo	656199
48	Sportello Guichet Door Tuer Portezuela	656200
49	Asse ruote Axe roues Wheels axle Radachse Eje ruedas	681067
50	Perno sportello Pivot guichet Door pin Tuerzapfen Perno portezuela	691013
51	Presa atlas 50mmq Prise atlas 50mmq Atlas socket 50mmq Atlas steckdose 50mmq Enchufe atlas 50mmq	712036
52	Spina atlas 50mmq Fiche atlas 50mmq Atlas plug 50mmq Atlas stecker 50mmq Enchufe atlas 50mmq	712040
53	Toledo 300 pinza di massa 300a Toledo 300 borne de masse 300a Toledo 300 work clamp 300a Toledo 300 masseklemme 300a Toledo 300 borne de masa 300a	712231
54	Cavo 25mmq 3m-pinza massa-atlas 50mmq Cable 25mmq 3m-pince masse-atlas 50mmq Cable 25mmq 3m-work clamp-atlas 50mmq Kabel 25mmq 3m-massezange-atlas 50mmq Cable 25mmq 3m-pinca masa-atlas 50mmq	713192
55	Rullino traino 4r ø0.6fe-0.8/0.9fe "p-k" Galet 4r ø 0.6fe-0.8/0.9fe "p-k" Feed roll 4r ø 0.6fe-0.8/0.9fe "p-k" Vorschubrolle 4r ø 0.6fe-0.8/0.9fe "p-k" Roldana 4r ø 0.6fe-0.8/0.9fe "p-k"	742576
56	Rullino traino 4r ø 0.8fe-1.0fe "p-k" Galet 4r ø 0.8fe-1.0fe "p-k" Feed roll 4r ø 0.8fe-1.0fe "p-k" Vorschubrolle 4r ø 0.8fe-1.0fe "p-k" Roldana 4r ø 0.8fe-1.0fe "p-k"	722227
57	Rullino traino 4r ø 1.2fe-1.6fe "p-k" Galet 4r ø 1.2fe-1.6fe "p-k" Feed roll 4r ø 1.2fe-1.6fe "p-k" Vorschubrolle 4r ø 1.2fe-1.6fe "p-k" Roldana 4r ø 1.2fe-1.6fe "p-k"	722241
58	Traino 4 rulli Devidoir 4 rouleaux 4 Roll wirefeeder 4 Räder drahtvorschub Alimendator de hilo 4 rodillos	981928
59	Attacco torcia Attelage torche Torch connection Brenneranschluss Enganche soplete	723229
60	Entrata guidafilo Entree guide fil Wire guide inlet Drahtfuehrungsseeleeingang Entrata vaina guiadera alambre	742064
61	Adattatore Adapteur Adapter Zahnrad Adaptador	742166
62	Ancora controrullino sinistra Ancre contre-galet gauche Left anchor for pressure roller Linker anker für gegenrolle Ancora izquierda para contra roldana	981929
63	Ancora controrullino destra Ancre contre-galet droit Right anchor for pressure roller Rechter anker für gegenrolle Ancora derecha para contra roldana	981930
64	Ingranaggio motore Engrenage motor Motor drive gear Motorszahnrad Engranaje motor	742348

REF.	ELENCO PEZZI DI RICAMBIO PIECES DETACHEES SPARE PARTS LIST ERSATZTEILLISTE PIEZAS DE REPUESTO	CODICE CODE KODE
65	Tubo capillare ø 2x5 Tuyau capillaire ø 2x5 Wire conduit ø 2x5 Kapillarrohr ø 2x5 Tubo capilar ø 2x5	742365
66	Ingranaggio Engrenages Gears Zahnrad Engranaje	742590
67	Kit trasformatore ausiliario Kit transformateur auxiliaire Auxiliary transformer kit Hilfstransformatorkit Kit transformador auxiliar	981401
68	Kit diodi Kit diodes Diode kit Diode kit Kit diodo	981632
69	Kit igbt + trasformatore impulsi Kit igbt + transformateur d'impulsions Kit igbt + impulse transformer Kit igbt + impuls-transformator Kit igbt + transformador de impulsos	981633
70	Kit aspo 15kg Kit support bobine 15kg Reel kit 15kg Wickler kit 15kg Kit aspa 15kg	981703
71	Kit mantello Kit capot Cover kit Deckelkit Kit panel de cobertura	981740
72	Kit scheda completa Kit fiche complete Complete pcb kit Komplette karte kit Kit tarjeta completa	981769
73	Kit fondo Kit chassis Bottom kit Bodenteil kit Kit fondo	981770
74	Kit frontale Kit partie frontal Front panel kit Geraetefront kit Kit frontal	981771
75	Kit scheda controllo Kit fiche de controle Control pcb kit Kontrollekarte kit Kit tarjeta de controlo	981772
76	Kit scheda pannello Kit platine frontal Kit front panel card Kit geraetefrontskarte Kit tarjeta frontal	981800
77	Kit pressacavo + ghiera Kit presse cable + embout Kit cable bushing + ring nut Kit kabelhalter + nutmutter Kit prensa cable + virola	990046
78	Kit guaina entrata motore Kit gaine entree moteur Gas hose kit Drahtfuehrungsseelekit Kit vaina guiadera alambre	990097
79	Fusibile Fusible Fuse Sicherung Fusible	122434
80	Staffa portabombola Etrier porte-bouteille Bottle-holder bracket Kasten fuer flasche Estribo porta bombona	645673

REF.	ELENCO PEZZI DI RICAMBIO PIECES DETACHEES SPARE PARTS LIST ERSATZTEILLISTE PIEZAS DE REPUESTO	CODICE CODE KODE

REF.	ELENCO PEZZI DI RICAMBIO PIECES DETACHEES SPARE PARTS LIST ERSATZTEILLISTE PIEZAS DE REPUESTO	CODICE CODE KODE

Schema elettrico, Schéma électrique, Diagram, Schaltplan, Esquema de conexiones.

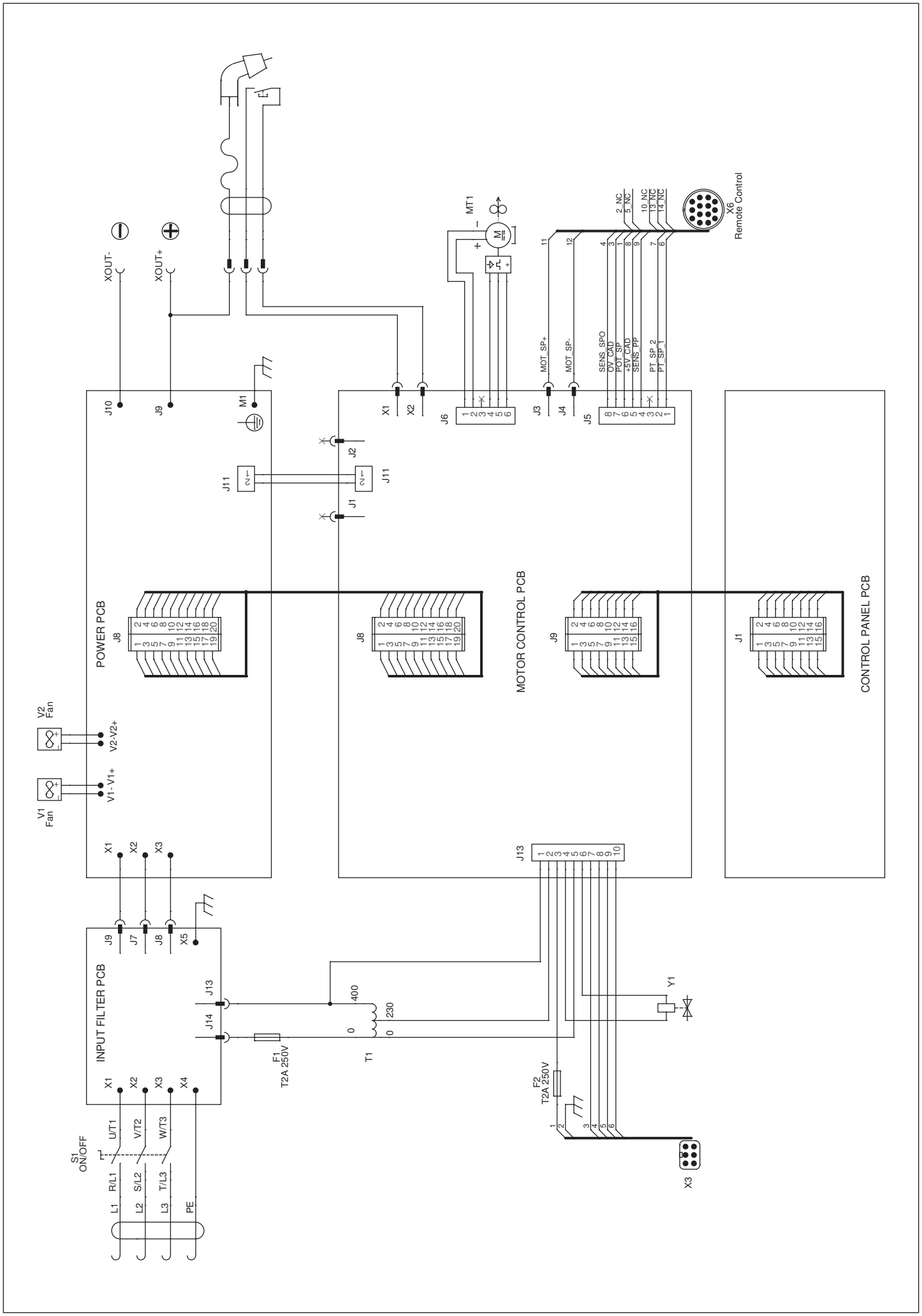

Esploso torcia, Dessin torche, Torch drawing, Schlauchpaket - Explosionszeichnung, Diseño seccionado antorcha.

742183 3m
742184 4m
742185 5m

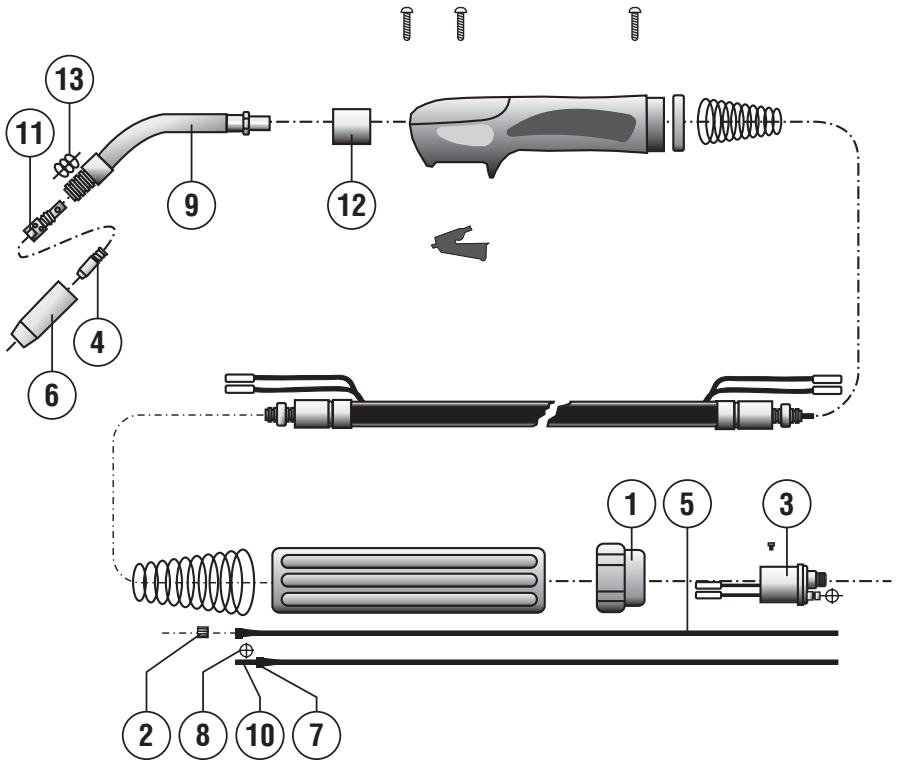

REF.	ELENCO PEZZI RICAMBIO TORCIA LISTE PIECES DETACHEES TORCHE SPARE PARTS LIST TORCH ERSATZTEILLISTE SCLAUCHPAKET PIEZAS DE REPUESTO ANTORCHA	CODICE CODE KODE
1	Ghiera fissaggio Embout fixage Ring nut Nutmutter Virola por fiyacion	722007
2	Dado fissaggio guaina Ecrou fixage gaine Liner nut Befestigungsmutter Dado por fiyacion vaina	722013
3	Corpo torcia Corp de torche Torch assy Brennerskörper Enganche antorcha	722441
4	Tubetto di contatto d. 1,2 Mm fe Tube contact d. 1,2 Mm fe Contact tip d. 1,2 Mm fe Kontaktdüse d. 1,2 Mm fe Tubito de contacto d. 1,2 Mm fe	722682
4	Tubetto di contatto d. 1 Mm fe m6 l=28mm Tube contact d. 1 Mm fe m6 l=28mm Contact tip d. 1 Mm fe m6 l=28mm Kontaktdüse d. 1 Mm fe m6 l=28mm Tubito de contacto d. 1 Mm fe m6 l=28mm	722681
4	Tubetto di contatto d. 0,8 Mm m6 Tube contact d. 0,8 Mm m6 Contact tip d. 0,8 Mm m6 Kontaktdüse d. 0,8 Mm m6 Tubito de contacto d. 0,8 Mm m6	722680
4	Tubetto di contatto d. 1,2 Mm al/flux m6 Tube contact d. 1,2 Mm al/flux m6 Contact tip d. 1,2 Mm al/flux m6 Kontaktdüse d. 1,2 Mm al/flux m6 Tubito de contacto d. 1,2 Mm al/flux m6	722553
4	Tubetto di contatto d. 1 Mm al/flux m6 Tube contact d. 1 Mm al/flux m6 Contact tip d. 1 Mm al/flux m6 Kontaktdüse d. 1 Mm al/flux m6 Tubito de contacto d. 1 Mm al/flux m6	722552
4	Tubetto di contatto d. 0,6 Mm fe Tube contact d. 0,6 Mm fe Contact tip d. 0,6 Mm fe Kontaktdüse d. 0,6 Mm fe Tubito de contacto d. 0,6 Mm fe	722415
5	Guaina guidafilo ø0.6-0.8 3m blu Gaine pour fil ø0.6-0.8 3m bleu Wire guide hose ø0.6-0.8 3m blue Drahtführungsseele ø0.6-0.8 3m blue Vaina guia hilo ø0.6-0.8 3m blue	722437
5	Guaina guidafilo ø1.0-1.2 3m rossa Gaine pour fil ø1.0-1.2 3m rouge Wire guide hose ø1.0-1.2 3m red Drahtführungsseele ø1.0-1.2 3m rot Vaina guia hilo ø1.0-1.2 3m roja	722689
5	Guaina guidafilo ø1.0-1.2 4m al Gaine pour fil ø 1.0-1.2 4m al Wire guide hose ø 1.0-1.2 4m al Drahtführungsseele ø 1.0-1.2 4m al Vaina guia hilo ø 1.0-1.2 4m al	742984

REF.	ELENCO PEZZI RICAMBIO TORCIA LISTE PIECES DETACHEES TORCHE SPARE PARTS LIST TORCH ERSATZTEILLISTE SCLAUCHPAKET PIEZAS DE REPUESTO ANTORCHA	CODICE CODE KODE
6	Ugello cilindrico mt25 Buse cylindrique mt25 Cylindrical nozzle mt25 Zylindrische düse mt25 Inyector cilindrico mt25	722684
6	Ugello conico mt25 Buse conique mt25 Conical nozzle mt25 Konische düse mt25 Inyector conico mt25	722685
6	Ugello testa fine mt25 Buse a tete fine mt25 Thin headed nozzle mt25 Verengte düse mt25 Inyector cabeza fina mt25	722686
6	Ugello per puntatura d. 18 Mm Buse pointage d. 18 Mm Spot welding nozzle d. 18 Mm Punktschweissgasdüse d. 18 Mm Inyector por puntos d. 18 Mm	722687
7	Nipples ferma guaina Nipples serre gaine Wire guide locking nipples Drahtseeleklemmnipples Nipples de bloqueo vaina	722598
8	Anello or Bague or Or ring Or ring Anillo or	722601
8	Anello or Anneau or Or ring Or ring Anillo or	722606
9	Lancia mt25 Lance mt25 Swan neck mt25 Brennerhals mt25 Encorvado mt25	722696
10	Tubetto ferma guaina Tuyau serre gaine Wire guide locking tube Drahtseeleklemmrohr Tubito de bloqueo vaina	722600
11	Diffusore gas mt25 Diffuseur gaz mt25 Gas diffuser mt25 Gasdiffusor mt25 Diffusor gas mt25	722688
12	Isolante corpo torcia Isolant corps de torche Torch connection insulation Brenneranschlussblock isolierteil Aislador cuerpo de antorcha	722693
13	Molla per ugello mt25 Ressort pour buse mt25 Nozzle spring mt25 Düsenfeder mt25 Muelle por inyector mt25	722690

REF.	ELENCO PEZZI RICAMBIO TORCIA LISTE PIECES DETACHEES TORCHE SPARE PARTS LIST TORCH ERSATZTEILLISTE SCLAUCHPAKET PIEZAS DE REPUESTO ANTORCHA	CODICE CODE KODE

Esploso torcia, Dessin torche, Torch drawing, Schlauchpaket - Explosionszeichnung, Diseño seccionado antorcha.

- Esploso torcia R.A. (Raffreddata ad acqua)
- Dessin torche R.A. (Refroide par eau)
- Drawing sectionalized torch R.A. (Water cooled)
- Zerlegte Zeichnung Schlauchpaket R.A. (Wasserkuhlung)
- Diseno seccionado antorcha R.A. (Enfriadar a agua)

722625 3m
742821 4m
722683 5m

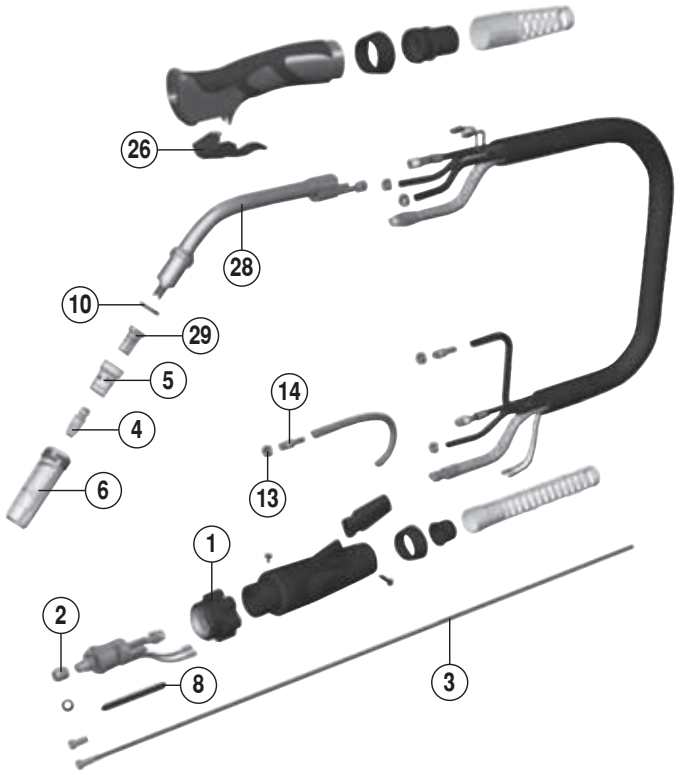

REF.	ELENCO PEZZI RICAMBIO TORCIA LISTE PIECES DETACHEES TORCHE SPARE PARTS LIST TORCH ERSATZTEILLISTE SCLAUCHPAKET PIEZAS DE REPUESTO ANTORCHA	CODICE CODE KODE
1	Ghiera fissaggio Embout fixage Ring nut Nutmutter Virola por fiyacion	722007
2	Dado fissaggio guaina Ecrou fixage gaine Liner nut Befestigungsmutter Dado por fiyacion vaina	722013
3	Guaina guidafilo ø1-1,2 tefl/graf.+Term. Gaine pour fil ø1-1,2 tefl/graf.+Term. Wire guide hose ø1-1,2 tefl/graf.+Term. Drahtführungsseele ø1-1,2 tefl/graf.+Te Vaina guia hilo ø1-1,2 tefl/graf.+Term.	742812
3	Guaina guidafilo ø 1,2-1,6 mm 3 m Gaine pour fil ø 1,2-1,6 mm 3 m Wire guide hose ø 1,2-1,6 mm 3 m Drahtführungsseele ø 1,2-1,6 mm 3 m Vaina guia hilo ø 1,2-1,6 mm 3 m	722588
3	Guaina guidafilo ø 1,0-1,2 mm 3 m Gaine pour fil ø 1,0-1,2 mm 3 m Wire guide hose ø 1,0-1,2 mm 3 m Drahtführungsseele ø 1,0-1,2 mm 3 m Vaina guia hilo ø 1,0-1,2 mm 3 m	722590
3	Guaina guidafilo ø 1,6-2,0 al teflon Gaine pour fil ø 1,6-2,0 al teflon Wire guide hose ø 1,6-2,0 al teflon Drahtführungsseele ø 1,6-2,0 al teflon Vaina guia hilo ø 1,6-2,0 al teflon	742811
3	Guaina g.F. D.2-2,4 Mt.3 Gaine guide fil d.2-2,4 M3 Wire guide hose d.2-2,4 M3 Drahtfuehrungsseele d.2-2,4 M3 Vaina guiadera alambre d. 2-2,4 M3	722820
4	Tubetto di contatto d. 0,8 Mm m8 Tube contact d. 0,8 Mm m8 Contact tip d. 0,8 Mm m8 Kontaktdüse d. 0,8 Mm m8 Tubito de contacto d. 0,8 Mm m8	722581
4	Tubetto di contatto d. 1 Mm Tube contact d. 1 Mm Contact tip d. 1 Mm Kontaktdüse d. 1 Mm Tubito de contacto d. 1 Mm	722582
4	Tubetto di contatto d. 1,2 Mm Tube contact d. 1,2 Mm Contact tip d. 1,2 Mm Kontaktdüse d. 1,2 Mm Tubito de contacto d. 1,2 Mm	722583
4	Tubetto di contatto ø 2,4 mm Tube contact ø 2,4 mm Contact tip ø 2,4 mm Kontaktdüse ø 2,4 mm Tubito de contacto ø 2,4 mm	722773
4	Tubetto contatto d.2,0 Tube contact d.2,0 Contact tip d.2,0 Kontaktroehrchen d.2,0 Tubito de contacto d.2,0	722586

REF.	ELENCO PEZZI RICAMBIO TORCIA LISTE PIECES DETACHEES TORCHE SPARE PARTS LIST TORCH ERSATZTEILLISTE SCLAUCHPAKET PIEZAS DE REPUESTO ANTORCHA	CODICE CODE KODE
4	Tubetto di contatto d. 1,6 Mm Tube contact d. 1,6 Mm Contact tip d. 1,6 Mm Kontaktroehrchen d. 1,6 Mm Tubito de contacto d. 1,6 Mm	722587
4	Tubetto di contatto d. 2 Mm al/flux Tube contact d. 2 Mm al/flux Contact tip d. 2 Mm al/flux Kontaktdüse d. 2 Mm al/flux Tubito de contacto d. 2 Mm al/flux	722772
4	Tubetto di contatto d. 1,6 Mm al/flux m8 Tube contact d. 1,6 Mm al/flux m8 Contact tip d. 1,6 Mm al/flux m8 Kontaktdüse d. 1,6 Mm al/flux m8 Tubito de contacto d. 1,6 Mm al/flux m8	722771
4	Tubetto di contatto d. 1,2 Mm al/flux m8 Tube contact d. 1,2 Mm al/flux m8 Contact tip d. 1,2 Mm al/flux m8 Kontaktdüse d. 1,2 Mm al/flux m8 Tubito de contacto d. 1,2 Mm al/flux m8	722770
4	Tubetto di contatto d. 1,6 Mm(cu cr zr) Tube contact d. 1,6 Mm (cu cr zr) Contact tip d. 1,6 Mm (cu cr zr) Kontaktdüse d. 1,6 Mm (cu cr zr) Tubito de contacto d. 1,6 Mm (cu cr zr)	742161
4	Tubetto di contatto d. 1,2 Mm(cu cr zr) Tube contact d. 1,2 Mm (cu cr zr) Contact tip d. 1,2 Mm (cu cr zr) Kontaktdüse d. 1,2 Mm (cu cr zr) Tubito de contacto d. 1,2 Mm (cu cr zr)	742160
4	Tubetto di contatto d. 1 Mm (cu cr zr) Tube contact d. 1 Mm (cu cr zr) Contact tip d. 1 Mm (cu cr zr) Kontaktdüse d. 1 Mm (cu cr zr) Tubito de contacto d. 1 Mm (cu cr zr)	742159
4	Tubetto di contatto d. 1 Mm al/flux m8 Tube contact d. 1 Mm al/flux m8 Contact tip d. 1 Mm al/flux m8 Kontaktdüse d. 1 Mm al/flux m8 Tubito de contacto d. 1 Mm al/flux m8	722769
5	Diffusore gas isolante mt 501 Diffuseur gaz isolant mt 501 Insulating gas diffuser mt 501 Isolierte gas diffusor mt 501 Difusor gas aislante mt 501	722593
6	Ugello puntatura Buse pointage Spot welding nozzle Punktschweissduese Inyector por puntos	722594
6	Ugello cilindrico mt500 Buse cylindrique mt500 Cylindrical nozzle mt500 Zylindrische düse mt500 Inyector cilindrico mt500	722595
6	Ugello conico mt500 Buse conique mt500 Conical nozzle mt500 Konische düse mt500 Inyector conico mt500	722585

REF.	ELENCO PEZZI RICAMBIO TORCIA LISTE PIECES DETACHEES TORCHE SPARE PARTS LIST TORCH ERSATZTEILLISTE SCLAUCHPAKET PIEZAS DE REPUESTO ANTORCHA	CODICE CODE KODE
8	Tubetto ferma guaina Tuyau serre gaine Wire guide locking tube Drahtseeleklemmrohr Tubito de bloqueo vaina	722600
10	Rondella isolante Rondelle isolante Insulating washer Isolierschraube Arandela aislante	722603
13	Fascetta Collier Hose ring Schelle Cintura	232114
14	Riduzione innesti rapidi Reducteur Reduction Schnelle kupplungreduktion Reduccion inyertos rapidos	722608
26	Pulsante Poussoir Pushbutton Druckknopf Pulsador	722677
28	Lancia mt500 Lance mt500 Swan neck mt500 Brennerhals mt500 Encorvado mt500	722708
29	Supporto tubetto contatto mt500 Support tube contact mt500 Contact tip holder mt500 Kontaktröhrchen träger mt500 Sosten tubito de contacto mt500	722709

ELENCO PEZZI DI RICAMBIO
LISTE PIECES DETACHEES
SPARE PARTS LIST
ERSATZTEILLISTE
PIEZAS DE REPUESTO

ELECTROMIG 430 WAVE

TELWIN

Esploso macchina, Dessin appareil, Machine drawing, Explosions Zeichnung des Geräts, Diseño seccionado maquina.

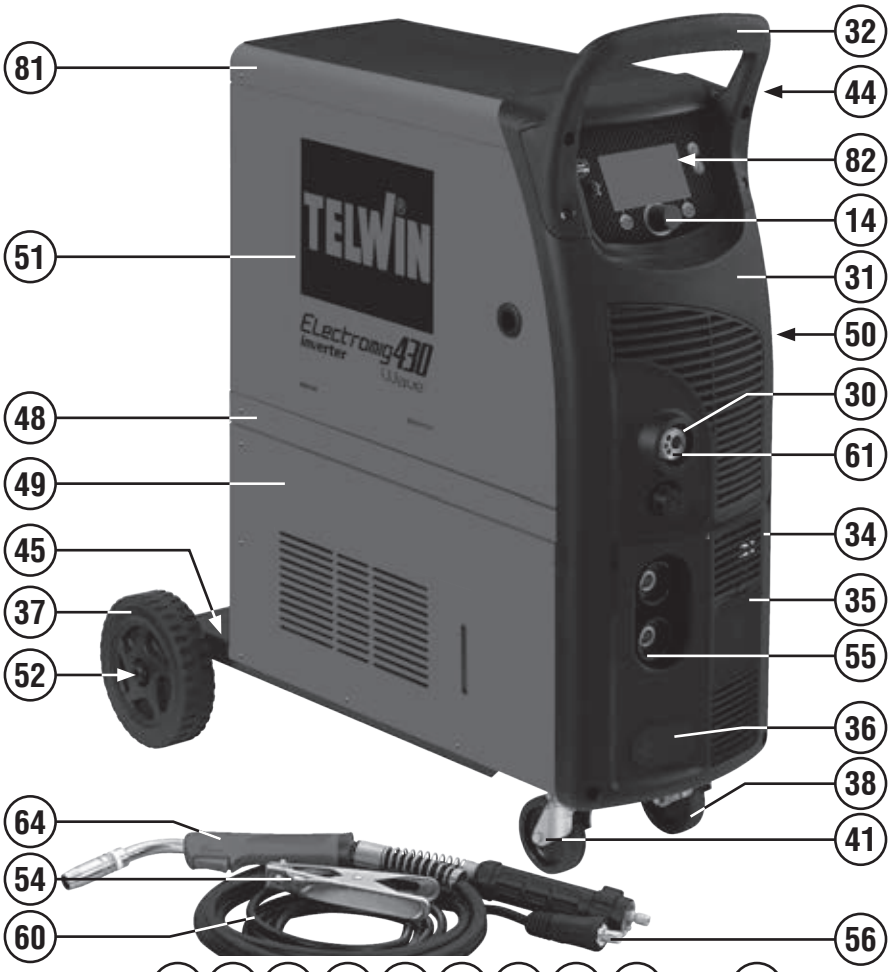

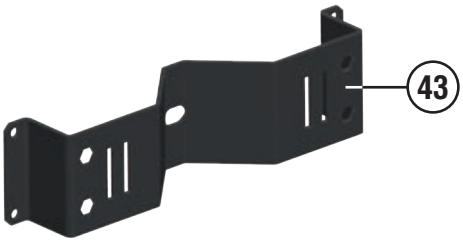

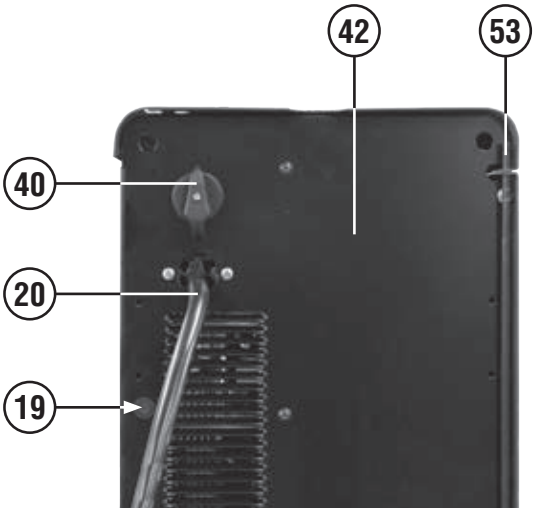

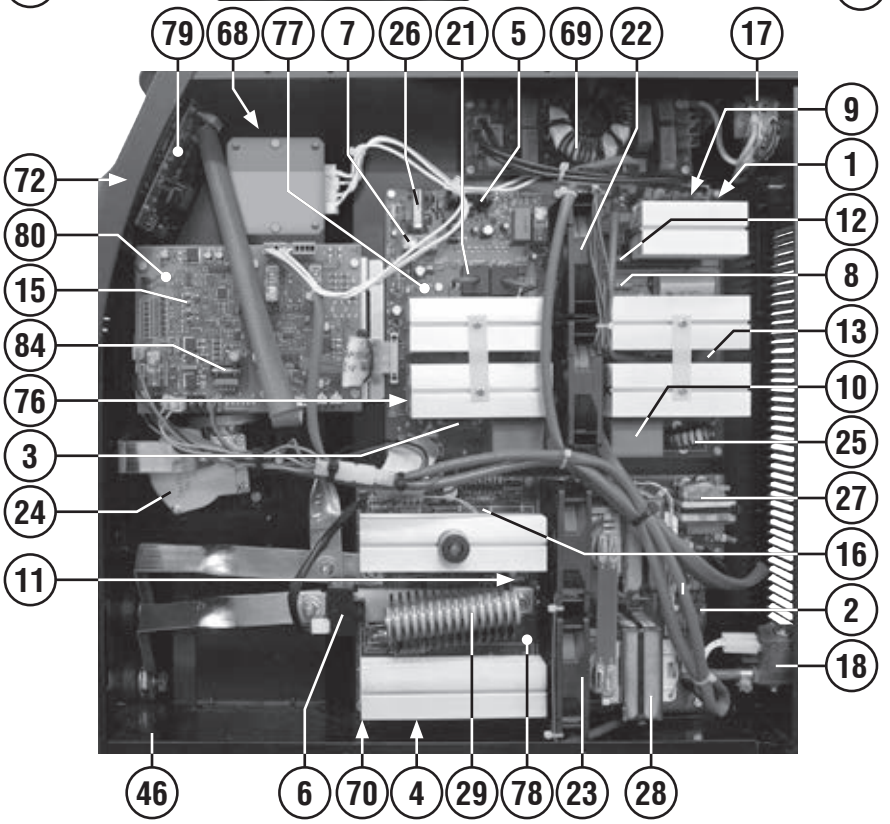

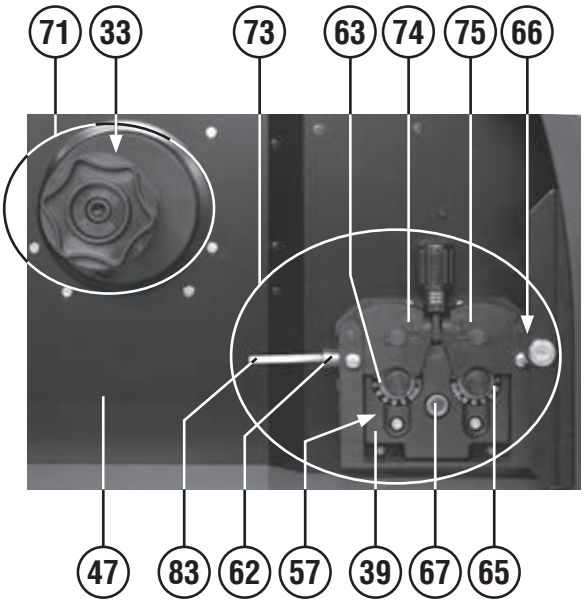

REF.	ELENCO PEZZI DI RICAMBIO PIECES DETACHEES SPARE PARTS LIST ERSATZTEILLISTE PIEZAS DE REPUESTO	CODICE CODE KODE
1	Ponte monofase Pont monophase Single phase bridge Einfasige brücke Puente monofasico	111017
2	Rele Relais Relais Relais Conectador	111583
3	Res. Met. 22r 5w 5% Res. Met. 22r 5w 5% Res. Met. 22r 5w 5% Res. Met. 22r 5w 5% Res. Met. 22r 5w 5%	111327
4	Res. Met. 4r7 5w 5% Res. Met. 4r7 5w 5% Res. Met. 4r7 5w 5% Res. Met. 4r7 5w 5% Res. Met. 4r7 5w 5%	111442
5	Igbt Igbt Igbt Igbt Igbt	111094
6	Sensore hall Capteur hall Sensor hall Messfuhler hall Sensor hall	113870
7	Rele' Relais Relais Relais Relais	116320
8	Resistenza Resistance Resistance Widerstand Resistencia	116752
9	Varistore Varistor Varistor Varistor Varistor	116760
10	Condensatore Condensateur Condenser Kondensator Condensator	116882
11	Soppressore di tensione Soppresseur de tension Voltage suppressor Spannungssoppressor Sopresor de tension	116935
12	Res. Met. 10r 2w 5% fuse Res. Met. 10r 2w 5% fuse Res. Met. 10r 2w 5% fuse Res. Met. 10r 2w 5% fuse Res. Met. 10r 2w 5% fuse	116962
13	Termostato Thermostat Thermal switch Thermostat Termostato	121261
14	Kit manopola encoder d.29 Kit poignee encoder d.29 Encoder knob kit d.29 Encodergriff kit d.29 Kit manija encoder d.29	980968
15	Fusibile Fusible Fuse Sicherung Fusible	121456
16	Termostato Thermostat Thermostat Thermostat Termostato	121546
17	Commutatore Commutateur Switch Schalter Conmutador	122017
18	Elettrovalvola Electrovanne Electrovalve Elektroventil Electrovalvula	121800
19	Fusibile Fusible Fuse Sicherung Fusible	122437
20	Cavo alim. 4g4 2 m Cable alim. 4g4 2 m Mains cable 4g4 2 m Netzkabel 4g4 2 m Cable alim. 4g4 2 m	132206
21	Trasformatore di corrente Transformateur de courant Current transformer Stromwandler Transformador de corriente	152230
22	Ventilatore Ventilateur Fan Ventilator Ventilador	152269
23	Ventilatore Ventilateur Fan Ventilator Ventilador	152904
24	Motoriduttore 24vdc + sensore hall Motoriducteur 24vdc + sonde hall Motoreducer 24vdc + hall sonde Motoriduktor 24vdc + hall probe Motoriductor 24vdc + sonda hall	153053
25	Induttanza Inductance Inductance Drossel Induccion	169821
26	Trasformatore flyback ausiliario Transformateur flyback auxiliaire Flyback auxiliary transformer Flyback hilfstransformator Transformador flyback auxiliar	169862
27	Induttanza Inductance Inductance Drossel Induccion	169926
28	Trasformatore potenza Transformateur de puissance Power trafo Leistungstransformer Transformador de potencia	169938
29	Induttanza Inductance Inductance Drossel Induccion	169940
30	Protezione attacco torcia Support isolant torche Torch connection protection Brennersisolierlager Sosten isolator antorcha	312105
31	Frontale superiore Partie frontal superieur Upper front panel Obere geraetefront Frontal superior	321231
32	Assieme manico Set poignee Handle set Handgriff set Set manija	321165
33	Distanziale per aspo Entretoise pour support bobine Reel spacer Distanzstueck Espàciador por aspa	321210
34	Frontale inferiore Partie frontal inferieur Lower front panel Geraetefront unten Frontal inferior	321232
35	Tappo Bouchon Cap Stopfen Tapon	321233
36	Tappo Bouchon Cap Stopfen Tapon	321234
37	Ruota Roue Wheel Rad Rueda	321390
38	Ruota Roue Wheel Rad Rueda	322245
39	Protezione Protecion Cover Deckel Proteccion	322814
40	Assieme manopola per commutatore Set poigne pour commutateur Switch knob set Umschaltergriff set Set manjia para conmutador	323101
41	Supporto girevole + freno Support tournant + frein Swivel support + brake Drehbarerhalter + bremse Sosten giratorio + freno	484688
42	Retro Partie arriere Back panel Rückseite Trasera	642794
43	Staffa portabombola Etrier porte-bouteille Bottle-holder bracket Kasten fuer flasche Estribo porta bombona	645673
44	Gancio appendi torcia Accrocheur torche Torch hook Haken fuer brenner Gancho fijacion antorcha	645704
45	Staffa asse ruote Bride axe roues Wheels axle braket Radachsebuegel Estribo eje ruedas	645715
46	Ripiano Surface Surface Deckel Plano	645747
47	Diaframma Diaphragme Diaphragm Diaphragma Diafragma	645926
48	Vano aspo Support bobine vain Reel space Wickler raum Espacio aspa	651240
49	Fianco destro Partie laterale droit Side panel right Seitenblech recht Panel derecho	656206
50	Fianco sx Partie lateral gauche Left side panel Linkes seitenteil Panel izquierdo	656262
51	Sportello Guichet Door Tuer Portezuela	656263
52	Asse ruote Axe roues Wheels axle Radachse Eje ruedas	681067
53	Perno sportello Pivot guichet Door pin Tuerzapfen Perno portezuela	691013
54	Toledo 400 pinza di massa 400a Toledo 400 pince de masse 400a Toledo 400 work clamp 400a Toledo 400 masseklemme 400a Toledo 400 pinza de masa 400a	712032
55	Presa atlas 50mmq Prise atlas 50mmq Atlas socket 50mmq Atlas steckdose 50mmq Enchufe atlas 50mmq	712036
56	Spina atlas 50mmq Fiche atlas 50mmq Atlas plug 50mmq Atlas stecker 50mmq Enchufe atlas 50mmq	712040
57	Rullino traino 4r ø0.6fe-0.8/0.9fe "p-k" Galet 4r ø 0.6fe-0.8/0.9fe "p-k" Feed roll 4r ø 0.6fe-0.8/0.9fe "p-k" Vorschubrolle 4r ø 0.6fe-0.8/0.9fe "p-k" Roldana 4r ø 0.6fe-0.8/0.9fe "p-k"	742576
58	Rullino traino 4r ø 0.8fe-1.0fe "p-k" Galet 4r ø 0.8fe-1.0fe "p-k" Feed roll 4r ø 0.8fe-1.0fe "p-k" Vorschubrolle 4r ø 0.8fe-1.0fe "p-k" Roldana 4r ø 0.8fe-1.0fe "p-k"	722227
59	Rullino traino 4r ø 1.2fe-1.6fe "p-k" Galet 4r ø 1.2fe-1.6fe "p-k" Feed roll 4r ø 1.2fe-1.6fe "p-k" Vorschubrolle 4r ø 1.2fe-1.6fe "p-k" Roldana 4r ø 1.2fe-1.6fe "p-k"	722241
60	Cavo 50 mmq 3 m pinza di massa atlas 50m Cable 50 mmq 3 m pince de masse atlas 50 Cable 50 mmq 3 m work clamp atlas 50mmq Kabel 50 mmq 3 m massezange atlas 50mmq Cable 50 mmq 3 m pinca de masa atlas 50m	723031
61	Attacco torcia Attelage torche Torch connection Brenneranschluss Enganche soplete	723229
62	Entrata guidafilo Entree guide fil Wire guide inlet Drahtfuehrungsseeleeingang Entrata vaina guiadera alambre	742064
63	Adattatore Adapteur Adapter Zahnrad Adaptador	742166

REF.	ELENCO PEZZI DI RICAMBIO PIECES DETACHEES SPARE PARTS LIST ERSATZTEILLISTE PIEZAS DE REPUESTO	CODICE CODE KODE
64	Mt36 torcia mig 3m Mt36 torche mig 3m Mt36 mig torch 3m Mt36 mig brenner 3m Mt36 antorcha mig 3m	742186
65	Ingranaggio motore Engrenage motor Motor drive gear Motorszahnrad Engranaje motor	742348
66	Tubo capillare ø 2x5 Tuyau capillaire ø 2x5 Wire conduit ø 2x5 Kapillarrohr ø 2x5 Tubo capilar ø 2x5	742365
67	Ingranaggio Engrenages Gears Zahnrad Engranaje	742590
68	Kit trasformatore ausiliario Kit transformateur auxiliaire Auxiliary transformer kit Hilfstransformatorkit Kit transformador auxiliar	981401
69	Kit scheda filtro ingresso Kit platine filtre input Input filter card kit Input filterkarte kit Kit tarjeta filtro input	980947
70	Kit diodi Kit diodes Diode kit Diode kit Kit diodo	981632
71	Kit aspo 15kg Kit support bobine 15kg Reel kit 15kg Wickler kit 15kg Kit aspa 15kg	981703
72	Kit frontale Kit partie frontal Front panel kit Geraetefront kit Kit frontal	981771
73	Traino 4 rulli Devidoir 4 rouleaux 4 Roll wirefeeder 4 Räder drahtvorschub Alimendator de hilo 4 rodillos	981928
74	Ancora controrullino sinistra Ancre contre-galet gauche Left anchor for pressure roller Linker anker für gegenrolle Ancora izquierda para contra roldana	981929
75	Ancora controrullino destra Ancre contre-galet droit Right anchor for pressure roller Rechter anker für gegenrolle Ancora derecha para contra roldana	981930
76	Kit igbt Kit igbt Kit igbt Kit igbt Kit igbt	981982
77	Scheda primario Fiche primaire Primary pcb Primaertrafokarte Tarjeta primario	981983
78	Scheda secondario Fiche secondaire Secondary pcb Sekundaertrafokarte Tarjeta secundario	981984
79	Scheda tft Platine tft Tft card Tft karte Tarjeta tft	982223
80	Scheda controllo Platine controle Control card Steuerungskarte Tarjeta de mando	982222
81	Kit mantello Kit capot Cover kit Deckelkit Kit panel de cobertura	981740
82	Kit supporto display Kit support display Display holder kit Display halterung kit Kit soporte display	981810
83	Kit guaina entrata motore Kit gaine entree moteur Gas hose kit Drahtfuehrungsseelekit Kit vaina guiadera alambre	990097
84	Fusibile Fusible Fuse Sicherung Fusible	122434

Schema elettrico, Schéma électrique, Diagram, Schaltplan, Esquema de conexiones.

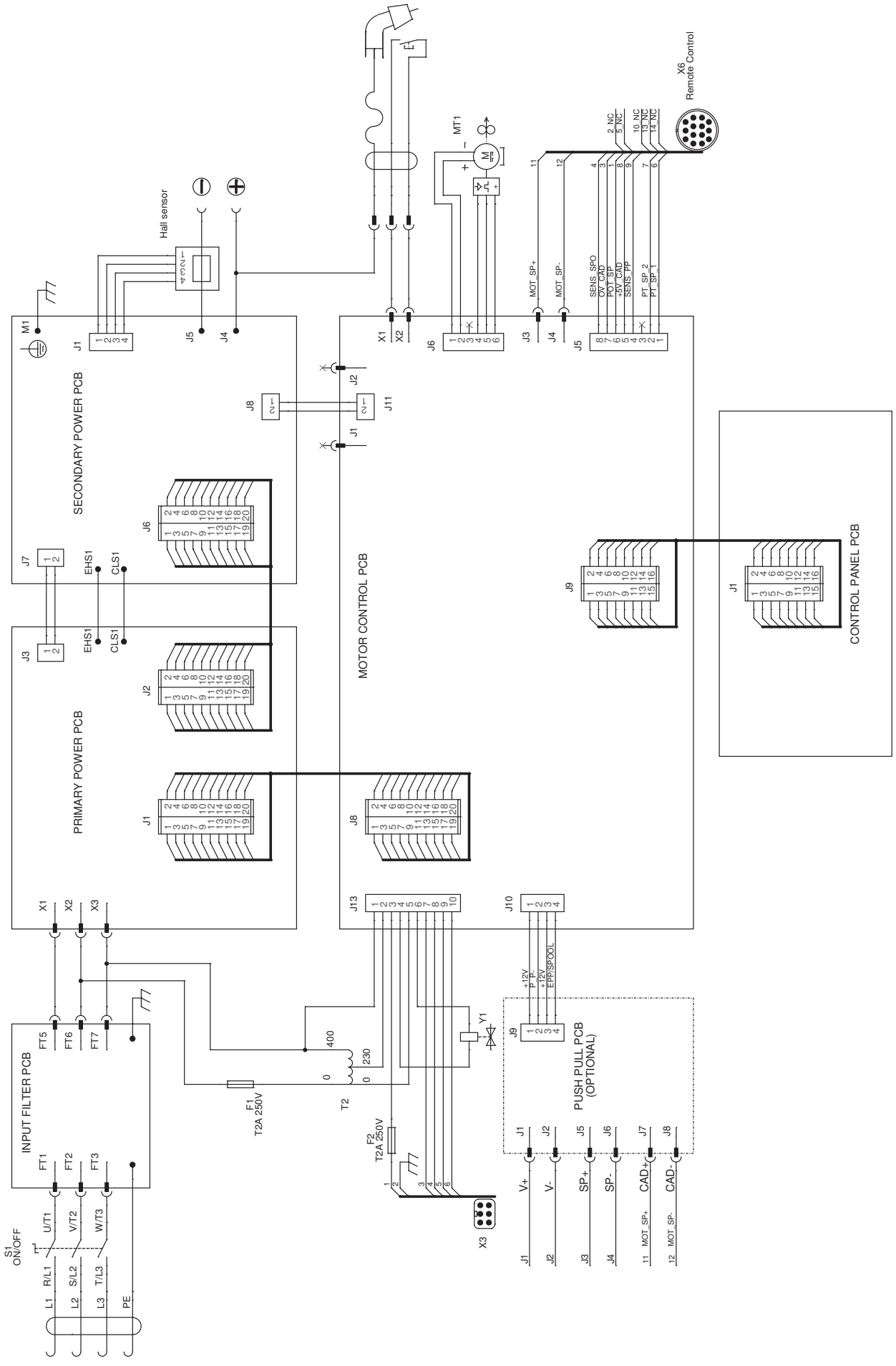

Esploso torcia, Dessin torche, Torch drawing, Schlauchpaket - Explosionszeichnung, Diseño seccionado antorcha.

742186 3m
742187 4m
742188 5m

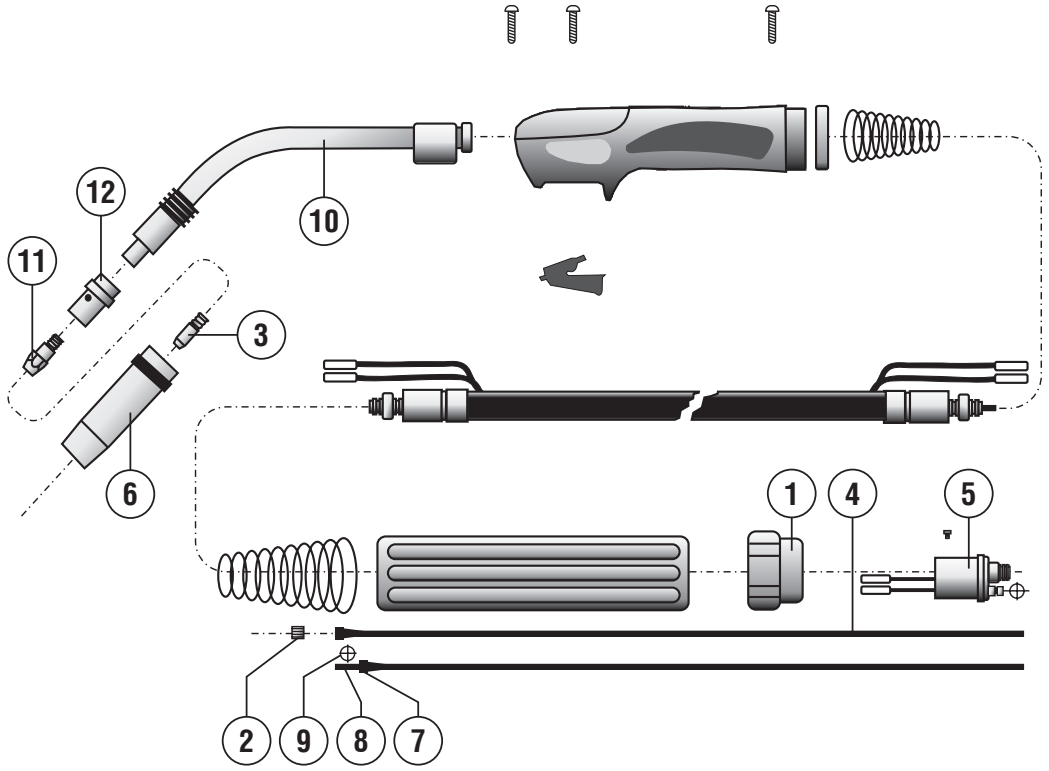

REF.	ELENCO PEZZI RICAMBIO TORCIA LISTE PIECES DETACHEES TORCHE SPARE PARTS LIST TORCH ERSATZTEILLISTE SCLAUCHPAKET PIEZAS DE REPUESTO ANTORCHA	CODICE CODE KODE
1	Ghiera fissaggio Embout fixage Ring nut Nutmutter Virola por fiyacion	722007
2	Dado fissaggio guaina Ecrou fixage gaine Liner nut Befestigungsmutter Dado por fiyacion vaina	722013
3	Tubetto di contatto d. 1,6 Mm al/flux m6 Tube contact d. 1,6 Mm al/flux m6 Contact tip d. 1,6 Mm al/flux m6 Kontaktdüse d. 1,6 Mm al/flux m6 Tubito de contacto d. 1,6 Mm al/flux m6	722818
3	Tubetto di contatto d. 1,6 Mm fe Tube contact d. 1,6 Mm fe Contact tip d. 1,6 Mm fe Kontaktroehrchen d. 1,6 Mm fe Tubito de contacto d. 1,6 Mm fe	722797
3	Tubetto di contatto d. 1,2 Mm fe Tube contact d. 1,2 Mm fe Contact tip d. 1,2 Mm fe Kontaktdüse d. 1,2 Mm fe Tubito de contacto d. 1,2 Mm fe	722682
3	Tubetto di contatto d. 1 Mm fe m6 l=28mm Tube contact d. 1 Mm fe m6 l=28mm Contact tip d. 1 Mm fe m6 l=28mm Kontaktdüse d. 1 Mm fe m6 l=28mm Tubito de contacto d. 1 Mm fe m6 l=28mm	722681
3	Tubetto di contatto d. 0,8 Mm m6 Tube contact d. 0,8 Mm m6 Contact tip d. 0,8 Mm m6 Kontaktdüse d. 0,8 Mm m6 Tubito de contacto d. 0,8 Mm m6	722680
3	Tubetto di contatto d. 1,2 Mm al/flux m6 Tube contact d. 1,2 Mm al/flux m6 Contact tip d. 1,2 Mm al/flux m6 Kontaktdüse d. 1,2 Mm al/flux m6 Tubito de contacto d. 1,2 Mm al/flux m6	722553
3	Tubetto di contatto d. 1 Mm al/flux m6 Tube contact d. 1 Mm al/flux m6 Contact tip d. 1 Mm al/flux m6 Kontaktdüse d. 1 Mm al/flux m6 Tubito de contacto d. 1 Mm al/flux m6	722552
3	Tubetto di contatto d. 0,6 Mm fe Tube contact d. 0,6 Mm fe Contact tip d. 0,6 Mm fe Kontaktdüse d. 0,6 Mm fe Tubito de contacto d. 0,6 Mm fe	722415
4	Guaina guidafilo ø1.0-1.2 3m rossa Gaine pour fil ø1.0-1.2 3m rouge Wire guide hose ø1.0-1.2 3m red Drahtführungsseele ø1.0-1.2 3m rot Vaina guia hilo ø1.0-1.2 3m roja	722689
4	Guaina guidafilo ø0.6-0.8 3m blu Gaine pour fil ø0.6-0.8 3m bleu Wire guide hose ø0.6-0.8 3m blue Drahtführungsseele ø0.6-0.8 3m blue Vaina guia hilo ø0.6-0.8 3m blue	722437

REF.	ELENCO PEZZI RICAMBIO TORCIA LISTE PIECES DETACHEES TORCHE SPARE PARTS LIST TORCH ERSATZTEILLISTE SCLAUCHPAKET PIEZAS DE REPUESTO ANTORCHA	CODICE CODE KODE
4	Guaina guidafilo ø1.2-1.6 4m al Gaine pour fil ø1.2-1.6 4m al Wire guide hose ø1.2-1.6 4m al Drahtführungsseele ø1.2-1.6 4m al Vaina guia hilo ø1.2-1.6 4m al	742811
4	Guaina guidaf. Ø1.0-1.2 4m al Gaine pour fil ø1.0-1.2 4m al Wire guide hose ø1.0-1.2 4m al Drahtführungsseele ø1.0-1.2 4m al Vaina guia hilo ø1.0-1.2 4m al	742812
5	Corpo torcia Corp de torche Torch assy Brennerskörper Enganche antorcha	722441
6	Ugello conico mt36 Buse conique mt36 Conical nozzle mt36 Konische düse mt36 Inyector conico mt36	722792
6	Ugello testa fine mt36 Buse a tete fine mt36 Thin headed nozzle mt36 Verengte düse mt36 Inyector cabeza fina mt36	722793
6	Ugello puntatura Buse pour pointage Spot welding nozzle Punktschweissdüse Inyector por puntos	722794
7	Nipples ferma guaina Nipples serre gaine Wire guide locking nipples Drahtseeleklemmnipples Nipples de bloqueo vaina	722598
7	Nipples ferma guaina Nipples serre gaine Wire guide locking nipples Drahtseeleklemmnipples Nipples de bloqueo vaina	722599
8	Tubetto ferma guaina Tuyau serre gaine Wire guide locking tube Drahtseeleklemmrohr Tubito de bloqueo vaina	722600
9	Anello or Bague or Or ring Or ring Anillo or	722601
9	Anello or Anneau or Or ring Or ring Anillo or	722606
10	Lancia mt36 Lance mt36 Swan neck mt36 Brennerhals mt36 Encorvado mt36	722788

REF.	ELENCO PEZZI RICAMBIO TORCIA LISTE PIECES DETACHEES TORCHE SPARE PARTS LIST TORCH ERSATZTEILLISTE SCLAUCHPAKET PIEZAS DE REPUESTO ANTORCHA	CODICE CODE KODE
11	Supporto tubetto contatto mt36 Support tube contact mt36 Contact tip holder mt36 Kontaktröhrchen träger mt36 Sosten tubito de contacto mt36	722789
12	Diffusore gas isolante mt 36 Diffuseur gaz isolant mt 36 Insulating gas diffuser mt 36 Isolierte gas diffusor mt 36 Difusor gas aislante mt 36	722791

Esploso torcia, Dessin torche, Torch drawing, Schlauchpaket - Explosionszeichnung, Diseño seccionado antorcha.

- Esploso torcia R.A. (Raffreddata ad acqua)
- Dessin torche R.A. (Refroide par eau)
- Drawing sectionalized torch R.A. (Water cooled)
- Zerlegte Zeichnung Schlauchpaket R.A. (Wasserkuhlung)
- Diseno seccionado antorcha R.A. (Enfriadar a agua)

722625 3m
742821 4m
722683 5m

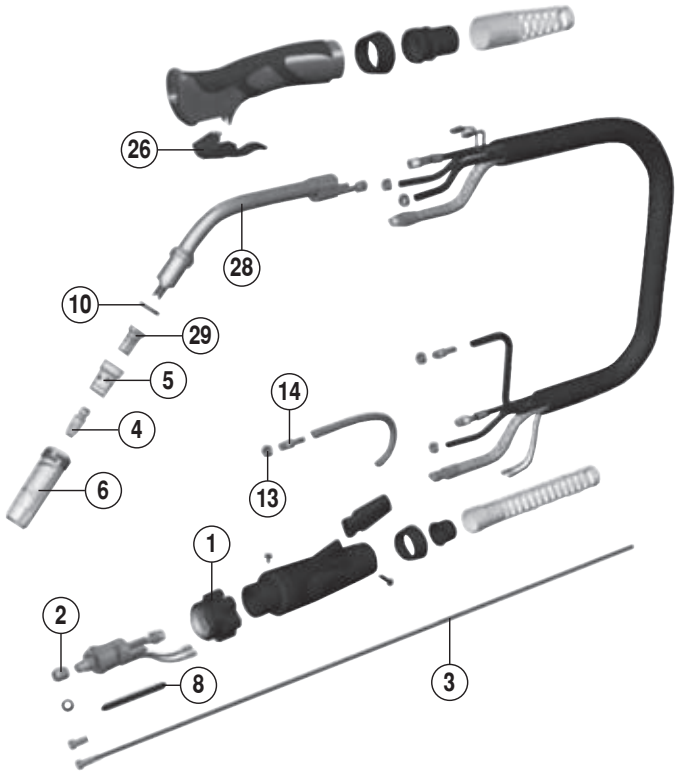

REF.	ELENCO PEZZI RICAMBIO TORCIA LISTE PIECES DETACHEES TORCHE SPARE PARTS LIST TORCH ERSATZTEILLISTE SCLAUCHPAKET PIEZAS DE REPUESTO ANTORCHA	CODICE CODE KODE
1	Ghiera fissaggio Embout fixage Ring nut Nutmutter Virola por fiyacion	722007
2	Dado fissaggio guaina Ecrou fixage gaine Liner nut Befestigungsmutter Dado por fiyacion vaina	722013
3	Guaina guidafilo ø1-1,2 tefl/graf.+Term. Gaine pour fil ø1-1,2 tefl/graf.+Term. Wire guide hose ø1-1,2 tefl/graf.+Term. Drahtführungsseele ø1-1,2 tefl/graf.+Te Vaina guia hilo ø1-1,2 tefl/graf.+Term.	742812
3	Guaina guidafilo ø 1,2-1,6 mm 3 m Gaine pour fil ø 1,2-1,6 mm 3 m Wire guide hose ø 1,2-1,6 mm 3 m Drahtführungsseele ø 1,2-1,6 mm 3 m Vaina guia hilo ø 1,2-1,6 mm 3 m	722588
3	Guaina guidafilo ø 1,0-1,2 mm 3 m Gaine pour fil ø 1,0-1,2 mm 3 m Wire guide hose ø 1,0-1,2 mm 3 m Drahtführungsseele ø 1,0-1,2 mm 3 m Vaina guia hilo ø 1,0-1,2 mm 3 m	722590
3	Guaina guidafilo ø 1,6-2,0 al teflon Gaine pour fil ø 1,6-2,0 al teflon Wire guide hose ø 1,6-2,0 al teflon Drahtführungsseele ø 1,6-2,0 al teflon Vaina guia hilo ø 1,6-2,0 al teflon	742811
3	Guaina g.F. D.2-2,4 Mt.3 Gaine guide fil d.2-2,4 M3 Wire guide hose d.2-2,4 M3 Drahtfuehrungsseele d.2-2,4 M3 Vaina guiadera alambre d. 2-2,4 M3	722820
4	Tubetto di contatto d. 0,8 Mm m8 Tube contact d. 0,8 Mm m8 Contact tip d. 0,8 Mm m8 Kontaktdüse d. 0,8 Mm m8 Tubito de contacto d. 0,8 Mm m8	722581
4	Tubetto di contatto d. 1 Mm Tube contact d. 1 Mm Contact tip d. 1 Mm Kontaktdüse d. 1 Mm Tubito de contacto d. 1 Mm	722582
4	Tubetto di contatto d. 1,2 Mm Tube contact d. 1,2 Mm Contact tip d. 1,2 Mm Kontaktdüse d. 1,2 Mm Tubito de contacto d. 1,2 Mm	722583
4	Tubetto di contatto ø 2,4 mm Tube contact ø 2,4 mm Contact tip ø 2,4 mm Kontaktdüse ø 2,4 mm Tubito de contacto ø 2,4 mm	722773
4	Tubetto contatto d.2,0 Tube contact d.2,0 Contact tip d.2,0 Kontaktroehrchen d.2,0 Tubito de contacto d.2,0	722586

REF.	ELENCO PEZZI RICAMBIO TORCIA LISTE PIECES DETACHEES TORCHE SPARE PARTS LIST TORCH ERSATZTEILLISTE SCLAUCHPAKET PIEZAS DE REPUESTO ANTORCHA	CODICE CODE KODE
4	Tubetto di contatto d. 1,6 Mm Tube contact d. 1,6 Mm Contact tip d. 1,6 Mm Kontaktroehrchen d. 1,6 Mm Tubito de contacto d. 1,6 Mm	722587
4	Tubetto di contatto d. 2 Mm al/flux Tube contact d. 2 Mm al/flux Contact tip d. 2 Mm al/flux Kontaktdüse d. 2 Mm al/flux Tubito de contacto d. 2 Mm al/flux	722772
4	Tubetto di contatto d. 1,6 Mm al/flux m8 Tube contact d. 1,6 Mm al/flux m8 Contact tip d. 1,6 Mm al/flux m8 Kontaktdüse d. 1,6 Mm al/flux m8 Tubito de contacto d. 1,6 Mm al/flux m8	722771
4	Tubetto di contatto d. 1,2 Mm al/flux m8 Tube contact d. 1,2 Mm al/flux m8 Contact tip d. 1,2 Mm al/flux m8 Kontaktdüse d. 1,2 Mm al/flux m8 Tubito de contacto d. 1,2 Mm al/flux m8	722770
4	Tubetto di contatto d. 1,6 Mm(cu cr zr) Tube contact d. 1,6 Mm (cu cr zr) Contact tip d. 1,6 Mm (cu cr zr) Kontaktdüse d. 1,6 Mm (cu cr zr) Tubito de contacto d. 1,6 Mm (cu cr zr)	742161
4	Tubetto di contatto d. 1,2 Mm(cu cr zr) Tube contact d. 1,2 Mm (cu cr zr) Contact tip d. 1,2 Mm (cu cr zr) Kontaktdüse d. 1,2 Mm (cu cr zr) Tubito de contacto d. 1,2 Mm (cu cr zr)	742160
4	Tubetto di contatto d. 1 Mm (cu cr zr) Tube contact d. 1 Mm (cu cr zr) Contact tip d. 1 Mm (cu cr zr) Kontaktdüse d. 1 Mm (cu cr zr) Tubito de contacto d. 1 Mm (cu cr zr)	742159
4	Tubetto di contatto d. 1 Mm al/flux m8 Tube contact d. 1 Mm al/flux m8 Contact tip d. 1 Mm al/flux m8 Kontaktdüse d. 1 Mm al/flux m8 Tubito de contacto d. 1 Mm al/flux m8	722769
5	Diffusore gas isolante mt 501 Diffuseur gaz isolant mt 501 Insulating gas diffuser mt 501 Isolierte gas diffusor mt 501 Difusor gas aislante mt 501	722593
6	Ugello puntatura Buse pointage Spot welding nozzle Punktschweissduese Inyector por puntos	722594
6	Ugello cilindrico mt500 Buse cylindrique mt500 Cylindrical nozzle mt500 Zylindrische düse mt500 Inyector cilindrico mt500	722595
6	Ugello conico mt500 Buse conique mt500 Conical nozzle mt500 Konische düse mt500 Inyector conico mt500	722585

REF.	ELENCO PEZZI RICAMBIO TORCIA LISTE PIECES DETACHEES TORCHE SPARE PARTS LIST TORCH ERSATZTEILLISTE SCLAUCHPAKET PIEZAS DE REPUESTO ANTORCHA	CODICE CODE KODE
8	Tubetto ferma guaina Tuyau serre gaine Wire guide locking tube Drahtseeleklemmrohr Tubito de bloqueo vaina	722600
10	Rondella isolante Rondelle isolante Insulating washer Isolierschraube Arandela aislante	722603
13	Fascetta Collier Hose ring Schelle Cintura	232114
14	Riduzione innesti rapidi Reducteur Reduction Schnelle kupplungreduktion Reduccion inyertos rapidos	722608
26	Pulsante Poussoir Pushbutton Druckknopf Pulsador	722677
28	Lancia mt500 Lance mt500 Swan neck mt500 Brennerhals mt500 Encorvado mt500	722708
29	Supporto tubetto contatto mt500 Support tube contact mt500 Contact tip holder mt500 Kontaktröhrchen träger mt500 Sosten tubito de contacto mt500	722709

ELENCO PEZZI DI RICAMBIO
LISTE PIECES DETACHEES
SPARE PARTS LIST
ERSATZTEILLISTE
PIEZAS DE REPUESTO

G.R.A. 3300

TELWIN®

Esploso macchina, Dessin appareil, Machine drawing, Explosions Zeichnung des Geräts, Diseño seccionado maquina.

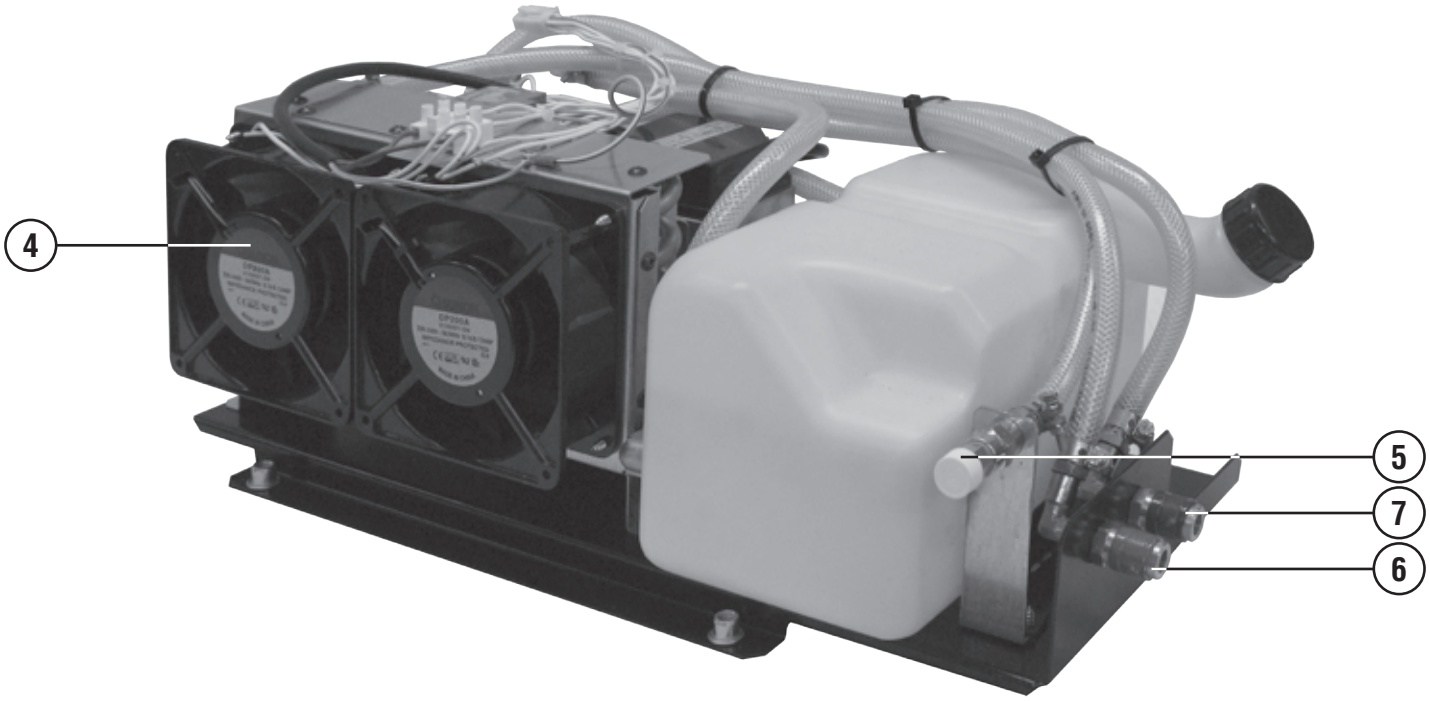

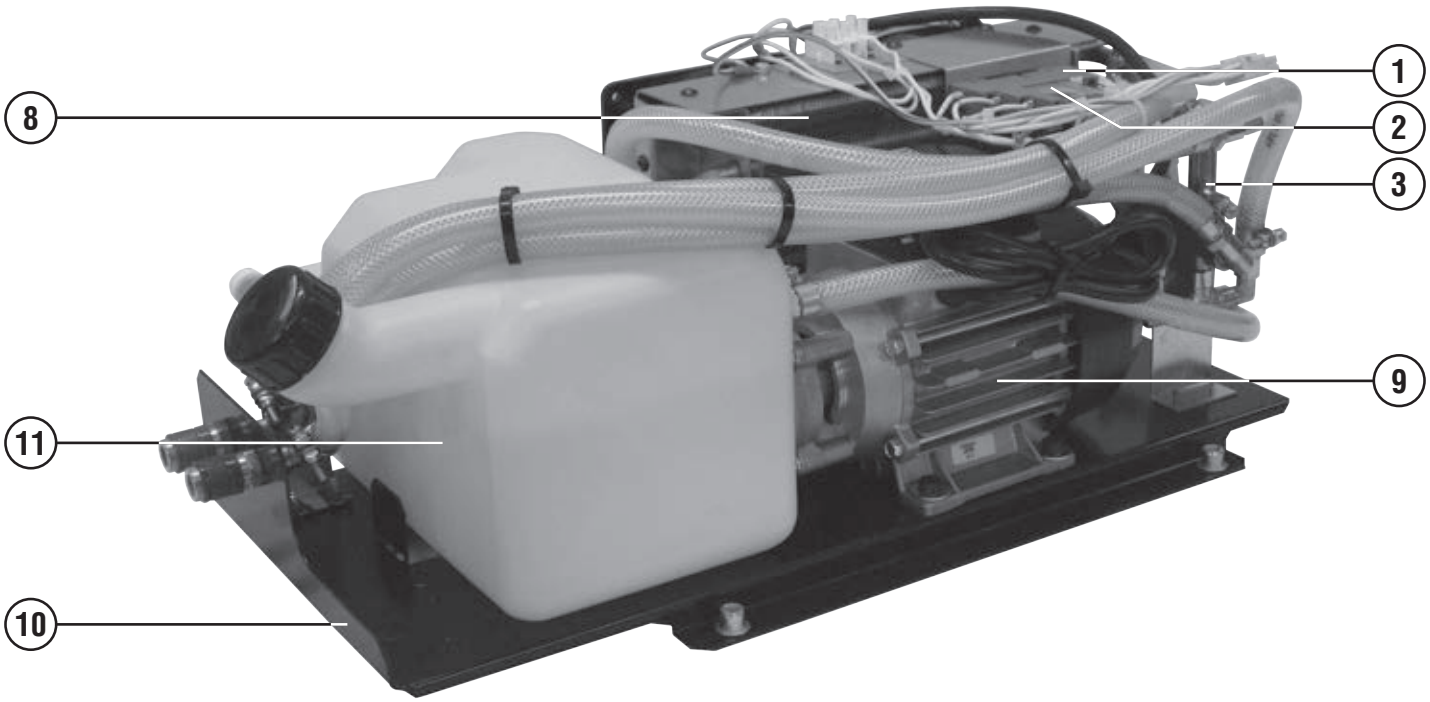

REF.	ELENCO PEZZI DI RICAMBIO PIECES DETACHEES SPARE PARTS LIST ERSATZTEILLISTE PIEZAS DE REPUESTO	CODICE CODE KODE
1	Base Base Basis Basis Base	112482
2	Rele' Relais Relais Relais Relais	116154
3	Pressostato Pressostat Pressure switch Druckanzeige Presostato	121750
4	Ventilatore Ventilateur Fan Ventilator Ventilador	152101
5	Valvola Vanne Valve Ventil Valvula	602261
6	Attacco rapido rosso Embout rapide rouge Quick connection red Schnellanschluss rot Enchufe roja	602296
7	Attacco rapido blu Embout rapide blue Quick connection blue Schnellanschluss blau Enchufe blue	602297
8	Radiatore gra Radiateur gra Gra radiator Gra radiator Radiator gra	602312
9	Elettropompa Pompe electrique Electric pump Elektropump Bomba electrica	602259
10	Kit fondo Kit chassis Bottom kit Bodenteil kit Kit fondo	981799
11	Kit serbatoio Kit reservoir Tank kit Behaelter kit Kit tanque	981006

REF.	ELENCO PEZZI DI RICAMBIO PIECES DETACHEES SPARE PARTS LIST ERSATZTEILLISTE PIEZAS DE REPUESTO	CODICE CODE KODE

REF.	ELENCO PEZZI DI RICAMBIO PIECES DETACHEES SPARE PARTS LIST ERSATZTEILLISTE PIEZAS DE REPUESTO	CODICE CODE KODE

Schema elettrico, Schéma électrique, Diagram, Schaltplan, Esquema de conexiones.

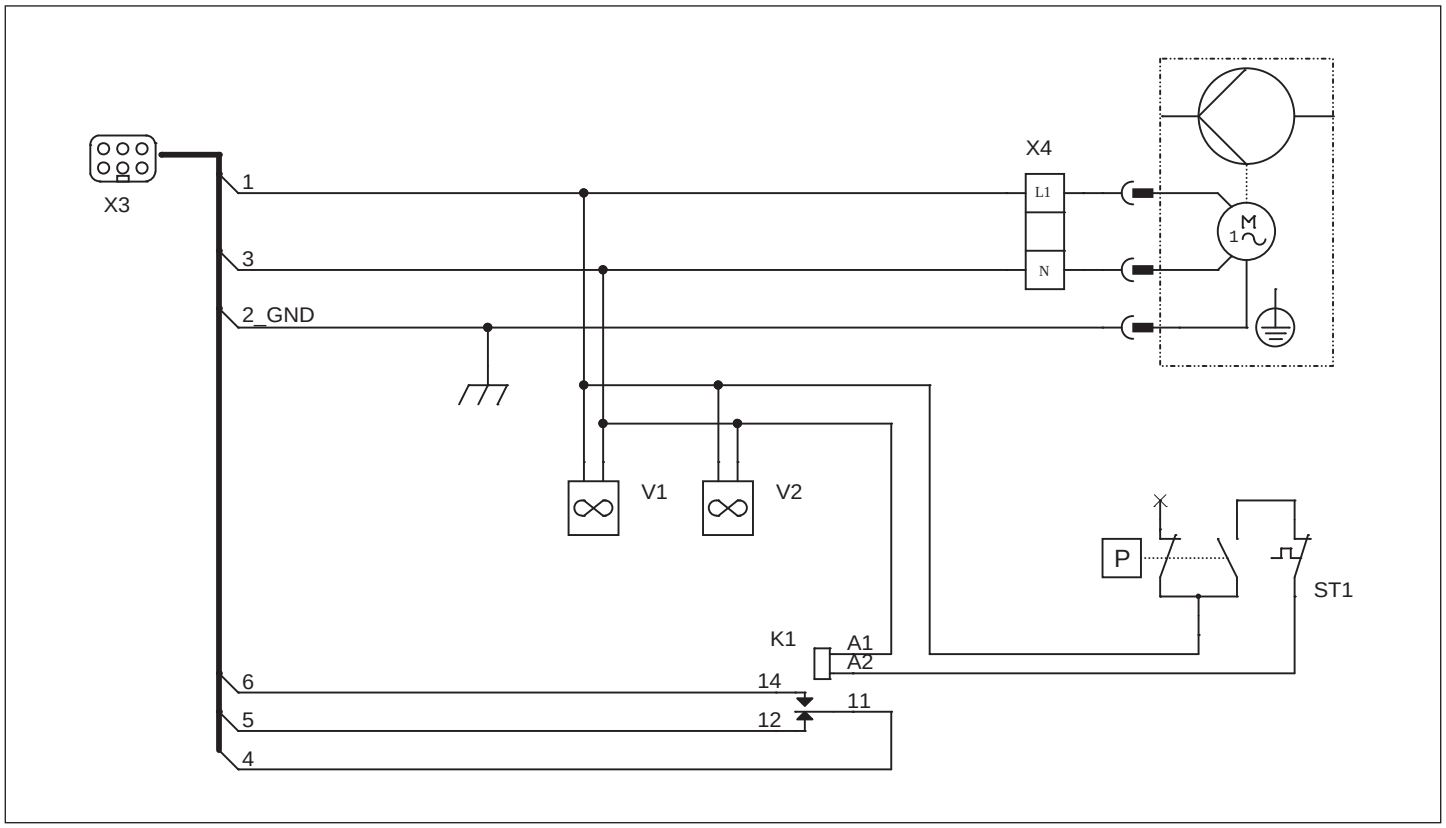

ELENCO PEZZI DI RICAMBIO
LISTE PIECES DETACHEES
SPARE PARTS LIST
ERSATZTEILLISTE
PIEZAS DE REPUESTO

INVERPULSE 60.30 WAVE

Esploso macchina, Dessin appareil, Machine drawing, Explosions Zeichnung des Geräts, Diseño seccionado maquina.

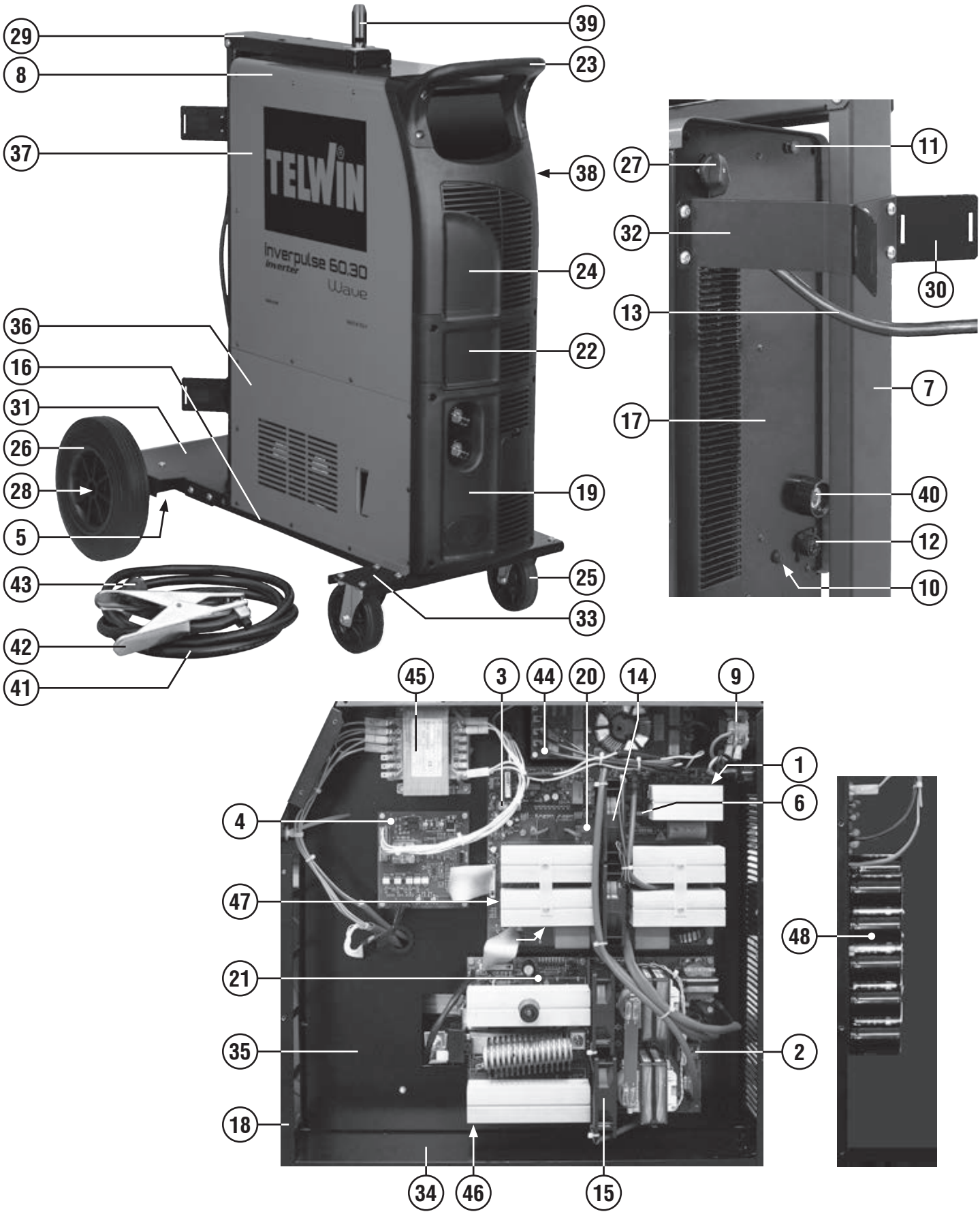

REF.	ELENCO PEZZI DI RICAMBIO PIECES DETACHEES SPARE PARTS LIST ERSATZTEILLISTE PIEZAS DE REPUESTO	CODICE CODE KODE
1	Ponte monofase Pont monophase Single phase bridge Einfasige brücke Puente monofasico	111017
2	Rele Relais Relais Relais Conectador	111583
3	Rele' Relais Relais Relais Relais	116320
4	Kit scheda controllo Kit carte controle Control board kit Steuerungskarte kit Kit tarjeta control	982309
5	Kit staffa ruote Kit bride roues Wheels braket kit Rad buegel kit Kit estribo ruedas	982063
6	Res. Met. 10r 2w 5% fuse Res. Met. 10r 2w 5% fuse Res. Met. 10r 2w 5% fuse Res. Met. 10r 2w 5% fuse Res. Met. 10r 2w 5% fuse	116962
7	Kit colonna Kit colonne Column kit Spalte kit Kit columna	982062
8	Kit mantello Kit capot Cover kit Deckel kit Kit panel de cobertura	982061
9	Commutatore Commutateur Switch Schalter Conmutador	122017
10	Fusibile Fusible Fuse Sicherung Fusible	122437
11	Lampada Temoin lumineux Lamp Kontrollampe Lamparilla de control	122709
12	Cablaggio II° Cable II° Cable II° Kabel II° Cable II°	125155
13	Cavo alim. 4g4 2 m Cable alim. 4g4 2 m Mains cable 4g4 2 m Netzkabel 4g4 2 m Cable alim. 4g4 2 m	132206
14	Ventilatore Ventilateur Fan Ventilator Ventilador	152269
15	Ventilatore Ventilateur Fan Ventilator Ventilador	152904
16	Kit fondo Kit chassis Bottom kit Bodenteil kit Kit fondo	982060

REF.	ELENCO PEZZI DI RICAMBIO PIECES DETACHEES SPARE PARTS LIST ERSATZTEILLISTE PIEZAS DE REPUESTO	CODICE CODE KODE
17	Kit retro Kit partie arriere Back panel kit Rückseite kit Kit trasera	982308
18	Kit frontale Kit partie frontal Front panel kit Geraetefront kit Kit frontal	982058
19	Kit frontale inferiore Kit partie frontal inferieur Lower front panel kit Gerätefront unten kit Kit frontal inferior	982289
20	Scheda primario Fiche primaire Primary pcb Primaertrafokarte Tarjeta primario	981983
21	Scheda secondario Fiche secondaire Secondary pcb Sekundaertrafokarte Tarjeta secundario	981984
22	Frontale Partie frontal Front panel Gerätefront Frontal	321241
23	Manico Poignee Handle Handgriff Manija	321279
24	Frontale superiore Partie frontal superieur Upper front panel Obere gerätefront Frontal superior	321320
25	Ruota con supporto Roue + support tournant Wheel + swivel support Rad + drehbarerhalter Rueda + sosten giratorio	321398
26	Ruota Roue Wheel Rad Rueda	321389
27	Assieme manopola per commutatore Set poigne pour commutateur Switch knob set Umschaltergriff set Set manjia para conmutador	323101
28	Asse per ruote Axes pour roue Wheels axle Raederachse Eje por rueda	422940
29	Braccio Brace Arm Arm Brazo	641093
30	Staffa portabombola Etrier porte-bouteille Bottle-holder bracket Kasten für flasche Estribo porta bombona	641095
31	Supporto bombola Support bouteille Bottle holder Flaschenhalter Sosten bombona	641096
32	Supporto colonna Support colonne Column holder Säule halterung Soporte columna	641098

REF.	ELENCO PEZZI DI RICAMBIO PIECES DETACHEES SPARE PARTS LIST ERSATZTEILLISTE PIEZAS DE REPUESTO	CODICE CODE KODE
33	Staffa supporto ruote Bride suport roues Wheel holding bracket Bügel f. Räderhalterung Estribo sosten ruedas	641099
34	Ripiano Surface Surface Deckel Plano	645863
35	Diaframma Diaphragme Diaphragm Diaphragma Diafragma	645864
36	Fianco destro Partie laterale droit Side panel right Seitenblech recht Panel derecho	656206
37	Fianco destro Partie lateral droite Right side panel Rechts seitenblech Flanco derecho	656288
38	Fianco sinistro Partie lateral gauche Left side panel Links seitenblech Flanco isquierdo	656289
39	Perno Goujon Pin Zapfen Perno	689037
40	Presa atlas 70/95mmq Prise atlas 70/95mmq Socket atlas 70/95mmq Steckdose atlas 70/95mmq Enchufe atlas 70/95mmq	804198
41	Pinza di massa + cavo 50mmq 3m ax50 Pince de masse + cable 50mmq 3m ax50 Work clamp + cable 50mmq 3m ax50 Massezange + kabel 50mmq 3m ax50 Pinca de masa + cable 50mmq 3m ax50	804125
42	Toledo 400 pinza di massa 400a bl Toledo 400 pince de masse 400a bl Toledo 400 work clamp 400a bl Toledo 400 masseklemme 400a bl Toledo 400 pinza de masa 400a bl	802534
43	Spina atlas 50mmq Fiche atlas 50mmq Plug atlas 50mmq Stecker atlas 50mmq Enchufe atlas 50mmq	804200
44	Kit scheda filtro ingresso Kit platine filtre input Input filter card kit Input filterkarte kit Kit tarjeta filtro input	980947
45	Kit trasformatore ausiliario Kit transformateur auxiliaire Auxiliary transformer kit Hilfstransformatorkit Kit transformador auxiliar	980958
46	Kit diodi Kit diodes Diode kit Diode kit Kit diodo	981632
47	Kit igbt Kit igbt Kit igbt Kit igbt Kit igbt	981982
48	Kit scheda condensatori Kit platine condensateurs Condenser card kit Kondensatorkarte kit Kit tarjeta condensatores	982303

Schema elettrico, Schéma électrique, Diagram, Schaltplan, Esquema de conexiones.

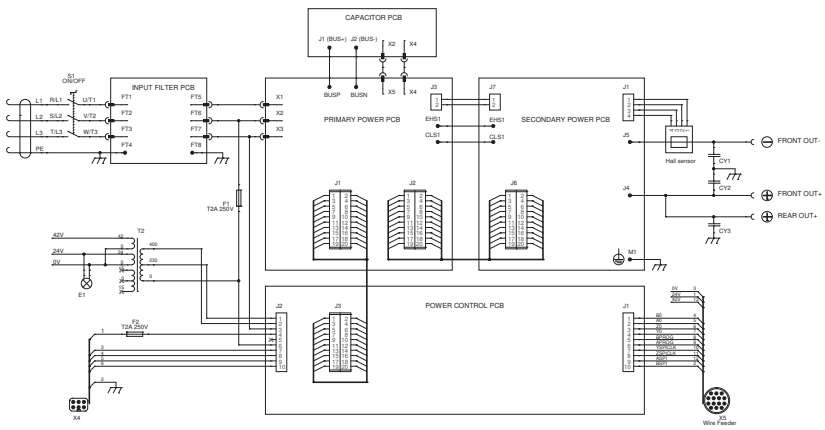

Esploso torcia, Dessin torche, Torch drawing, Schlauchpaket - Explosionszeichnung, Diseño seccionado antorcha.

722798 3m
722800 5m

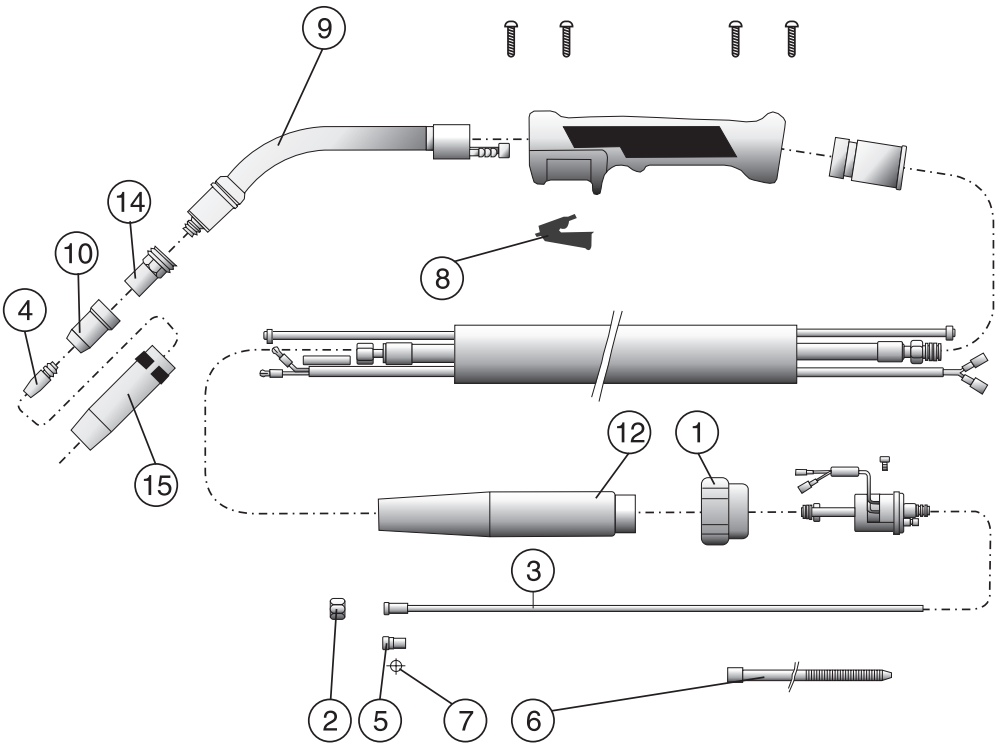

REF.	ELENCO PEZZI RICAMBIO TORCIA LISTE PIECES DETACHEES TORCHE SPARE PARTS LIST TORCH ERSATZTEILLISTE SCLAUCHPAKET PIEZAS DE REPUESTO ANTORCHA	CODICE CODE KODE
1	Ghiera fissaggio Embout fixage Ring nut Nutmutter Virola por fiyacion	722007
2	Dado fissaggio guaina Ecrou fixage gaine Liner nut Befestigungsmutter Dado por fiyacion vaina	722013
3	Guaina guidafilo d. 1-1,2 Mm 3 m Gaine pour fil d. 1-1,2 Mm 3 m Wire guide hose d. 1-1,2 Mm 3 m Drahtführungsseele d. 1-1,2 Mm 3 m Vaina guia hilo d. 1-1,2 Mm 3 m	742164
3	Guaina guidafilo ø 1,6-2mm 3m Gaine guide fil ø 1,6-2mm 3m Wire guide hose ø 1,6-2mm 3m Drahtführungsseele ø 1,6-2mm 3m Vaina guida alambre ø 1,6-2mm 3m	722814
3	Guaina guidafilo d. 1,2-1,6mm 3m gialla Gaine pour fil d. 1,2-1,6mm 3m jaune Wire guide hose d. 1,2-1,6mm 3m yellow Drahtführungsseele d. 1,2-1,6mm 3m gelbe Vaina guia hilo d. 1,2-1,6mm 3m amarilla	722795
3	Guaina guidafilo d. 1,0-1,2 3 M rossa Gaine pour fil d. 1,0-1,2 3 M rouge Wire guide hose d. 1,0-1,2 3 M red Drahtführungsseele d. 1,0-1,2 3 M rot Vaina guia hilo d.1,0-1,2 3 M roja	722689
3	Guaina guidafilo d. 1,6-2 Mm 3 m al Gaine pour fil d. 1,6-2 Mm 3 m al Wire guide hose d. 1,6-2 Mm 3 m al Drahtführungsseele d. 1,6-2 Mm 3 m al Vaina guia hilo d. 1,6-2 Mm 3 m al	722597
4	Tubetto di contatto d. 0,8 Mm m8 Tube contact d. 0,8 Mm m8 Contact tip d. 0,8 Mm m8 Kontaktdüse d. 0,8 Mm m8 Tubito de contacto d. 0,8 Mm m8	722581
4	Tubetto di contatto d. 1,6 Mm(cu cr zr) Tube contact d. 1,6 Mm (cu cr zr) Contact tip d. 1,6 Mm (cu cr zr) Kontaktdüse d. 1,6 Mm (cu cr zr) Tubito de contacto d. 1,6 Mm (cu cr zr)	742161
4	Tubetto di contatto d. 1,2 Mm(cu cr zr) Tube contact d. 1,2 Mm (cu cr zr) Contact tip d. 1,2 Mm (cu cr zr) Kontaktdüse d. 1,2 Mm (cu cr zr) Tubito de contacto d. 1,2 Mm (cu cr zr)	742160
4	Tubetto di contatto d. 1 Mm (cu cr zr) Tube contact d. 1 Mm (cu cr zr) Contact tip d. 1 Mm (cu cr zr) Kontaktdüse d. 1 Mm (cu cr zr) Tubito de contacto d. 1 Mm (cu cr zr)	742159
4	Tubetto di contatto d. 1 Mm Tube contact d. 1 Mm Contact tip d. 1 Mm Kontaktdüse d. 1 Mm Tubito de contacto d. 1 Mm	722582

REF.	ELENCO PEZZI RICAMBIO TORCIA LISTE PIECES DETACHEES TORCHE SPARE PARTS LIST TORCH ERSATZTEILLISTE SCLAUCHPAKET PIEZAS DE REPUESTO ANTORCHA	CODICE CODE KODE
4	Tubetto di contatto d. 1,2 Mm Tube contact d. 1,2 Mm Contact tip d. 1,2 Mm Kontaktdüse d. 1,2 Mm Tubito de contacto d. 1,2 Mm	722583
4	Tubetto di contatto d. 2 Mm al/flux Tube contact d. 2 Mm al/flux Contact tip d. 2 Mm al/flux Kontaktdüse d. 2 Mm al/flux Tubito de contacto d. 2 Mm al/flux	722772
4	Tubetto di contatto d. 1,6 Mm al/flux m8 Tube contact d. 1,6 Mm al/flux m8 Contact tip d. 1,6 Mm al/flux m8 Kontaktdüse d. 1,6 Mm al/flux m8 Tubito de contacto d. 1,6 Mm al/flux m8	722771
4	Tubetto di contatto d. 1,2 Mm al/flux m8 Tube contact d. 1,2 Mm al/flux m8 Contact tip d. 1,2 Mm al/flux m8 Kontaktdüse d. 1,2 Mm al/flux m8 Tubito de contacto d. 1,2 Mm al/flux m8	722770
4	Tubetto di contatto d. 1 Mm al/flux m8 Tube contact d. 1 Mm al/flux m8 Contact tip d. 1 Mm al/flux m8 Kontaktdüse d. 1 Mm al/flux m8 Tubito de contacto d. 1 Mm al/flux m8	722769
4	Tubetto contatto d.2,0 Tube contact d.2,0 Contact tip d.2,0 Kontaktroehrchen d.2,0 Tubito de contacto d.2,0	722586
4	Tubetto di contatto d. 1,6 Mm Tube contact d. 1,6 Mm Contact tip d. 1,6 Mm Kontaktroehrchen d. 1,6 Mm Tubito de contacto d. 1,6 Mm	722587
5	Nippel ferma guaina Nippel serre gaine Wire guide locking nipples Drahtseeleklemmnippel Nippel de bloqueo vaina	722599
5	Nipples ferma guaina Nipples serre gaine Wire guide locking nipples Drahtseeleklemmnippel Nipples de bloqueo vaina	722598
6	Tubetto ferma guaina Tuyau serre gaine Wire guide locking tube Drahtseeleklemmrohr Tubito de bloqueo vaina	722600
7	Anello or Anneau or Or ring Or ring Anillo or	722606
7	Anello or Bague or Or ring Or ring Anillo or	722601

REF.	ELENCO PEZZI RICAMBIO TORCIA LISTE PIECES DETACHEES TORCHE SPARE PARTS LIST TORCH ERSATZTEILLISTE SCLAUCHPAKET PIEZAS DE REPUESTO ANTORCHA	CODICE CODE KODE
8	Pulsante Poussoir Pushbutton Druckknopf Pulsador	722677
9	Lancia mt40 Lance mt40 Swan neck mt40 Brennerhals mt40 Encorvado mt40	722801
10	Diffusore gas isolante mt 40 Diffuseur gaz isolant mt 40 Insulating gas diffuser mt 40 Isolierte gas diffusor mt 40 Difusor gas aislante mt 40	722802
14	Supporto tubetto contatto mt40 Support tube contact mt40 Contact tip holder mt40 Kontaktröhrchen träger mt40 Sosten tubito de contacto mt40	722807
15	Ugello conico mt40 Buse conique mt40 Conical nozzle mt40 Konische düse mt40 Inyector conico mt40	722808
15	Ugello cilindrico mt40 Buse cylindrique mt40 Cylindrical nozzle mt40 Zylindrische düse mt40 Inyector cilindrico mt40	722809

Esploso torcia, Dessin torche, Torch drawing, Schlauchpaket - Explosionszeichnung, Diseño seccionado antorcha.

- Esploso torcia R.A. (Raffreddata ad acqua)
- Dessin torche R.A. (Refroide par eau)
- Drawing sectionalized torch R.A. (Water cooled)
- Zerlegte Zeichnung Schlauchpaket R.A. (Wasserkuhlung)
- Diseno seccionado antorcha R.A. (Enfriadar a agua)

722625 3m
742821 4m
722683 5m

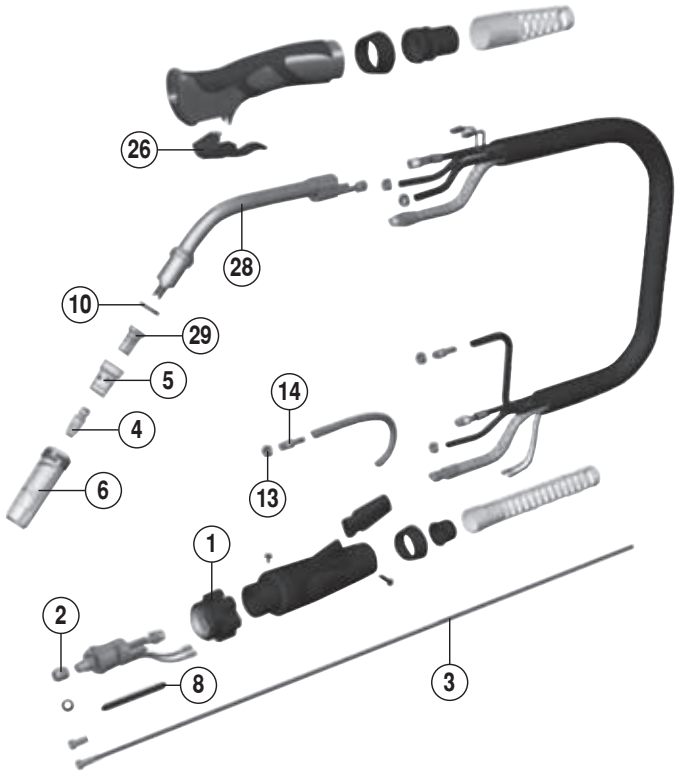

REF.	ELENCO PEZZI RICAMBIO TORCIA LISTE PIECES DETACHEES TORCHE SPARE PARTS LIST TORCH ERSATZTEILLISTE SCLAUCHPAKET PIEZAS DE REPUESTO ANTORCHA	CODICE CODE KODE
1	Ghiera fissaggio Embout fixage Ring nut Nutmutter Virola por fiyacion	722007
2	Dado fissaggio guaina Ecrou fixage gaine Liner nut Befestigungsmutter Dado por fiyacion vaina	722013
3	Guaina guidafilo ø1-1,2 tefl/graf.+Term. Gaine pour fil ø1-1,2 tefl/graf.+Term. Wire guide hose ø1-1,2 tefl/graf.+Term. Drahtführungsseele ø1-1,2 tefl/graf.+Te Vaina guia hilo ø1-1,2 tefl/graf.+Term.	742812
3	Guaina guidafilo ø 1,2-1,6 mm 3 m Gaine pour fil ø 1,2-1,6 mm 3 m Wire guide hose ø 1,2-1,6 mm 3 m Drahtführungsseele ø 1,2-1,6 mm 3 m Vaina guia hilo ø 1,2-1,6 mm 3 m	722588
3	Guaina guidafilo ø 1,0-1,2 mm 3 m Gaine pour fil ø 1,0-1,2 mm 3 m Wire guide hose ø 1,0-1,2 mm 3 m Drahtführungsseele ø 1,0-1,2 mm 3 m Vaina guia hilo ø 1,0-1,2 mm 3 m	722590
3	Guaina guidafilo ø 1,6-2,0 al teflon Gaine pour fil ø 1,6-2,0 al teflon Wire guide hose ø 1,6-2,0 al teflon Drahtführungsseele ø 1,6-2,0 al teflon Vaina guia hilo ø 1,6-2,0 al teflon	742811
3	Guaina g.F. D.2-2,4 Mt.3 Gaine guide fil d.2-2,4 M3 Wire guide hose d.2-2,4 M3 Drahtfuehrungsseele d.2-2,4 M3 Vaina guiadera alambre d. 2-2,4 M3	722820
4	Tubetto di contatto d. 0,8 Mm m8 Tube contact d. 0,8 Mm m8 Contact tip d. 0,8 Mm m8 Kontaktdüse d. 0,8 Mm m8 Tubito de contacto d. 0,8 Mm m8	722581
4	Tubetto di contatto d. 1 Mm Tube contact d. 1 Mm Contact tip d. 1 Mm Kontaktdüse d. 1 Mm Tubito de contacto d. 1 Mm	722582
4	Tubetto di contatto d. 1,2 Mm Tube contact d. 1,2 Mm Contact tip d. 1,2 Mm Kontaktdüse d. 1,2 Mm Tubito de contacto d. 1,2 Mm	722583
4	Tubetto di contatto ø 2,4 mm Tube contact ø 2,4 mm Contact tip ø 2,4 mm Kontaktdüse ø 2,4 mm Tubito de contacto ø 2,4 mm	722773
4	Tubetto contatto d.2,0 Tube contact d.2,0 Contact tip d.2,0 Kontaktroehrchen d.2,0 Tubito de contacto d.2,0	722586

REF.	ELENCO PEZZI RICAMBIO TORCIA LISTE PIECES DETACHEES TORCHE SPARE PARTS LIST TORCH ERSATZTEILLISTE SCLAUCHPAKET PIEZAS DE REPUESTO ANTORCHA	CODICE CODE KODE
4	Tubetto di contatto d. 1,6 Mm Tube contact d. 1,6 Mm Contact tip d. 1,6 Mm Kontaktroehrchen d. 1,6 Mm Tubito de contacto d. 1,6 Mm	722587
4	Tubetto di contatto d. 2 Mm al/flux Tube contact d. 2 Mm al/flux Contact tip d. 2 Mm al/flux Kontaktdüse d. 2 Mm al/flux Tubito de contacto d. 2 Mm al/flux	722772
4	Tubetto di contatto d. 1,6 Mm al/flux m8 Tube contact d. 1,6 Mm al/flux m8 Contact tip d. 1,6 Mm al/flux m8 Kontaktdüse d. 1,6 Mm al/flux m8 Tubito de contacto d. 1,6 Mm al/flux m8	722771
4	Tubetto di contatto d. 1,2 Mm al/flux m8 Tube contact d. 1,2 Mm al/flux m8 Contact tip d. 1,2 Mm al/flux m8 Kontaktdüse d. 1,2 Mm al/flux m8 Tubito de contacto d. 1,2 Mm al/flux m8	722770
4	Tubetto di contatto d. 1,6 Mm(cu cr zr) Tube contact d. 1,6 Mm (cu cr zr) Contact tip d. 1,6 Mm (cu cr zr) Kontaktdüse d. 1,6 Mm (cu cr zr) Tubito de contacto d. 1,6 Mm (cu cr zr)	742161
4	Tubetto di contatto d. 1,2 Mm(cu cr zr) Tube contact d. 1,2 Mm (cu cr zr) Contact tip d. 1,2 Mm (cu cr zr) Kontaktdüse d. 1,2 Mm (cu cr zr) Tubito de contacto d. 1,2 Mm (cu cr zr)	742160
4	Tubetto di contatto d. 1 Mm (cu cr zr) Tube contact d. 1 Mm (cu cr zr) Contact tip d. 1 Mm (cu cr zr) Kontaktdüse d. 1 Mm (cu cr zr) Tubito de contacto d. 1 Mm (cu cr zr)	742159
4	Tubetto di contatto d. 1 Mm al/flux m8 Tube contact d. 1 Mm al/flux m8 Contact tip d. 1 Mm al/flux m8 Kontaktdüse d. 1 Mm al/flux m8 Tubito de contacto d. 1 Mm al/flux m8	722769
5	Diffusore gas isolante mt 501 Diffuseur gaz isolant mt 501 Insulating gas diffuser mt 501 Isolierte gas diffusor mt 501 Difusor gas aislante mt 501	722593
6	Ugello puntatura Buse pointage Spot welding nozzle Punktschweissduese Inyector por puntos	722594
6	Ugello cilindrico mt500 Buse cylindrique mt500 Cylindrical nozzle mt500 Zylindrische düse mt500 Inyector cilindrico mt500	722595
6	Ugello conico mt500 Buse conique mt500 Conical nozzle mt500 Konische düse mt500 Inyector conico mt500	722585

REF.	ELENCO PEZZI RICAMBIO TORCIA LISTE PIECES DETACHEES TORCHE SPARE PARTS LIST TORCH ERSATZTEILLISTE SCLAUCHPAKET PIEZAS DE REPUESTO ANTORCHA	CODICE CODE KODE
8	Tubetto ferma guaina Tuyau serre gaine Wire guide locking tube Drahtseeleklemmrohr Tubito de bloqueo vaina	722600
10	Rondella isolante Rondelle isolante Insulating washer Isolierschraube Arandela aislante	722603
13	Fascetta Collier Hose ring Schelle Cintura	232114
14	Riduzione innesti rapidi Reducteur Reduction Schnelle kupplungreduktion Reduccion inyertos rapidos	722608
26	Pulsante Poussoir Pushbutton Druckknopf Pulsador	722677
28	Lancia mt500 Lance mt500 Swan neck mt500 Brennerhals mt500 Encorvado mt500	722708
29	Supporto tubetto contatto mt500 Support tube contact mt500 Contact tip holder mt500 Kontaktröhrchen träger mt500 Sosten tubito de contacto mt500	722709

ELENCO PEZZI DI RICAMBIO
LISTE PIECES DETACHEES
SPARE PARTS LIST
ERSATZTEILLISTE
PIEZAS DE REPUESTO

TI 60.30 WIREFEEDER

TELWIN®

Esploso macchina, Dessin appareil, Machine drawing, Explosions Zeichnung des Geräts, Diseño seccionado maquina.

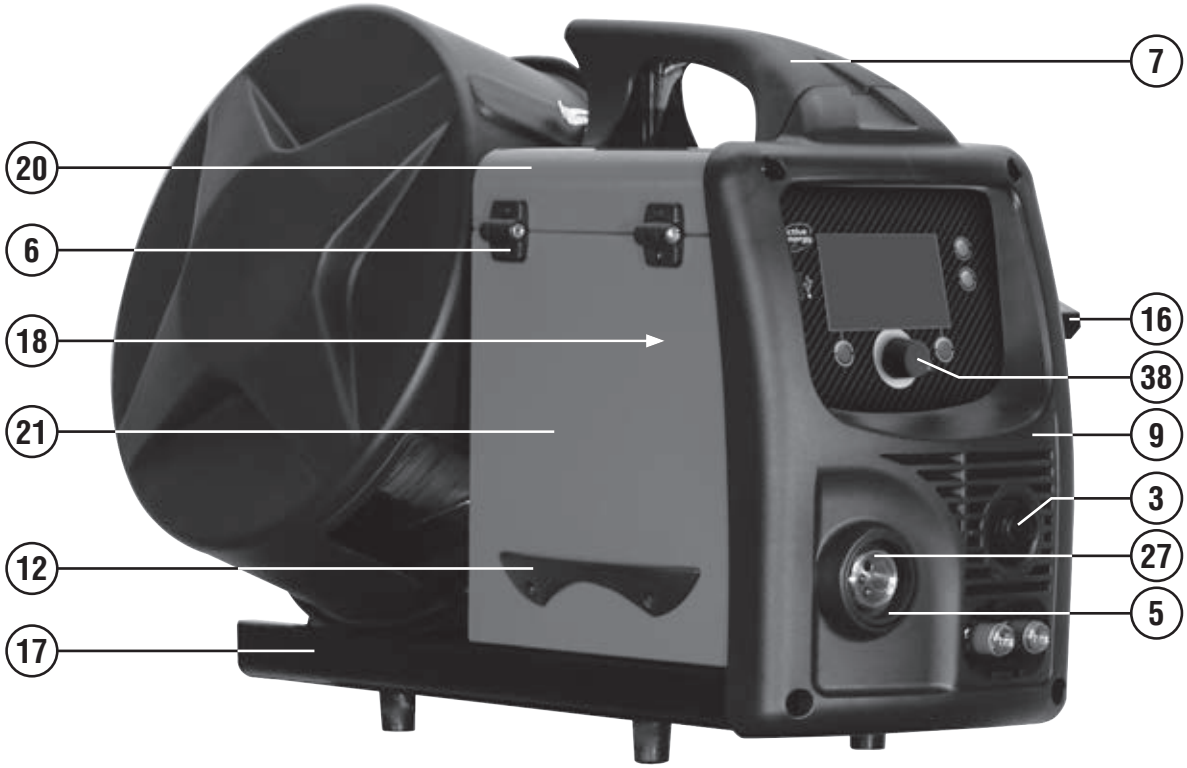

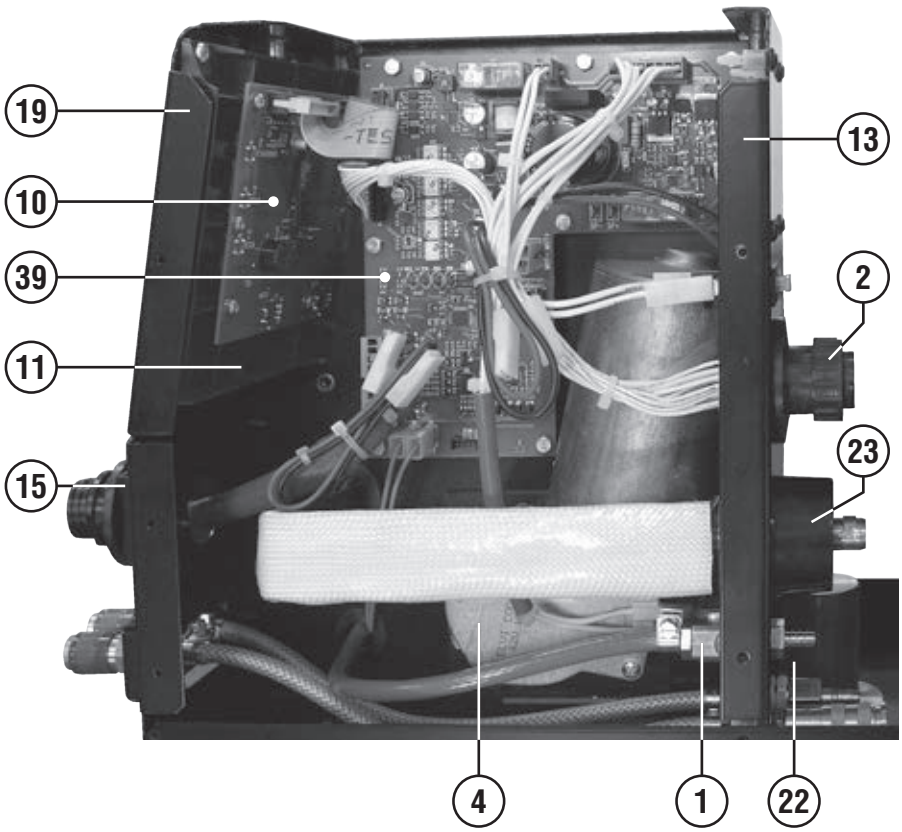

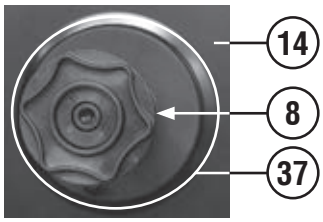

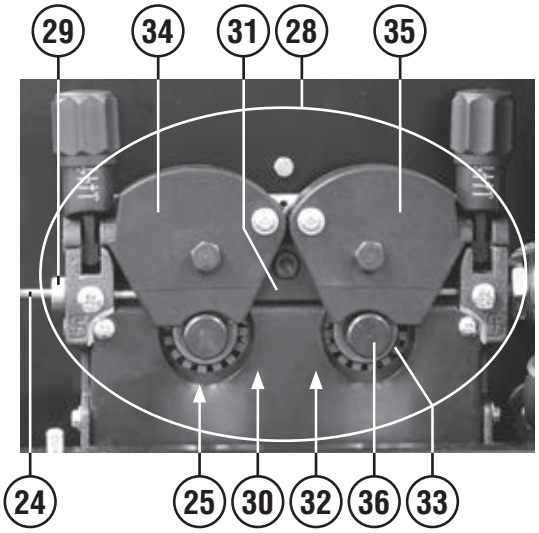

REF.	ELENCO PEZZI DI RICAMBIO PIECES DETACHEES SPARE PARTS LIST ERSATZTEILLISTE PIEZAS DE REPUESTO	CODICE CODE KODE
1	Elettrovalvola Electrovanne Electrovalve Elektroventil Electrovalvula	121801
2	Cablaggio traino Cable devidoir Wirefeeder cable Drahtvorschubskabel Cable alimentador de hilo	125157
3	Cablaggio connettore Cable connecteur Connector cable Anschlusskabel Cable conectador	125156
4	Motorino trainafilo Moteur pour devidoir Wire feed motor Drahtvorschubmotor Motor por arrastre hilo	153029
5	Protezione attacco torcia Support isolant torche Torch connection protection Brennersisolierlager Sosten isolator antorcha	312105
6	Assieme cerniera Charnière set Hinge set Scharnier set Bisagra set	312382
7	Manico Poignee Handle Handgriff Manija	312420
8	Distanziale per aspo Entretoise pour support bobine Reel spacer Distanzstueck Espàciador por aspa	321210
9	Kit frontale Kit partie frontal Front panel kit Gerätefront kit Kit frontal	982293
10	Kit scheda tft Kit platine tft Tft card kit Tft karte kit Kit tarjeta tft	982306
11	Kit supporto display Kit support display Display holder kit Display halterung kit Kit soporte display	982288
12	Maniglia Poignee Handle Handgriff Manija	322590
13	Retro Partie arriere Back panel Rückseite Trasera	642814
14	Staffa Bride Braket Buegel Estribo	645406
15	Supporto presa Support prise Socket holder Steckdose halterung Soporte enchufe	645675
16	Gancio appendi torcia Accrocheur torche Torch hook Haken fuer brenner Gancho fijacion antorcha	645704
17	Assieme fondo Set chassis Bottom set Bodenteil set Set fondo	645869
18	Protezione scheda Protection fiche Card cover Kartedeckel Proteccion tarjeta	645871
19	Frontale Partie frontal Front panel Gerätefront Frontal	645868
20	Mantello Capot Cover Deckel Panel de cobertura	651258
21	Sportello Guichet Door Tür Portezuela	651259
22	Kit supporto traino Kit support devidoir Wirefeeder holding kit Drahtvorschubhalterungskit Kit sosten alimentador de hilo	982294
23	Spina fissa ax mmq.70/95 Fiche atlas ax 70/95 Atlas plug ax 70/95 Atlas stecker ax 70/95 Enchufe atlas ax 70/95	804220
24	Kit guaina entrata motore Kit gaine entree moteur Gas hose kit Drahtfuehrungsseelekit Kit vaina guiadera alambre	990873
25	Rullino traino 4r ø 0.8fe-1.0fe “p-k” Galet 4r ø 0.8fe-1.0fe “p-k” Feed roll 4r ø 0.8fe-1.0fe “p-k” Vorschubrolle 4r ø 0.8fe-1.0fe “p-k” Roldana 4r ø 0.8fe-1.0fe “p-k”	722227
26	Rullino traino 4r ø 1.2fe-1.6fe “p-k” Galet 4r ø 1.2fe-1.6fe “p-k” Feed roll 4r ø 1.2fe-1.6fe “p-k” Vorschubrolle 4r ø 1.2fe-1.6fe “p-k” Roldana 4r ø 1.2fe-1.6fe “p-k”	722241
27	Attacco torcia Attelage torche Torch connection Schlauchpacketanschluss Enghanche antorcha	723067
28	Gruppo traino Dévidoir Wire feed assy Drahtvorschub Arrastre hilo	723096
29	Entrata guidafilo Entree guide fil Wire guide inlet Drahtfuehrungsseeleeingang Entrata vaina guiadera alambre	742064
30	Vite blocca ingranaggio Vis bloc engrenage Gearblocking screw Zahnradhalterschraube Tornillo bloqueo engranaje	742079
31	Guidafilo intermedio Guide fil Wire guide Drahtfuehrungsseele Vaina guiadera alambre	742121
32	Ingranaggio motore Engrenage motor Motor drive gear Motorszahnrad Engranaje motor	742155
33	Adattatore Adapteur Adapter Zahnrad Adaptador	742166
34	Ancora controrullino sinistra Ancre galet gauche Left anchor for pressure roller Linke anker fuer gegenrolle Ancora para contra roldana izquierdo	742167
35	Ancora controrullino destra Ancre galet droite Right anchor for pressure roller Rechte anker fuer gegenrolle Ancora para contra roldana derecho	742168
36	Vite bloccarullino Vis ferme galet Rollerfixing screw Rollerhalterschraube Tornillo bloque roldana	742397
37	Kit aspo 15kg Kit support bobine 15kg Reel kit 15kg Wickler kit 15kg Kit aspa 15kg	981703
38	Kit manopola encoder d.29 Kit poignee encoder d.29 Encoder knob kit d.29 Encodergriff kit d.29 Kit manija encoder d.29	982070
39	Kit scheda controllo Kit carte controle Control board kit Steuerungskarte kit Kit tarjeta control	982304

Schema elettrico, Schéma électrique, Diagram, Schaltplan, Esquema de conexiones.

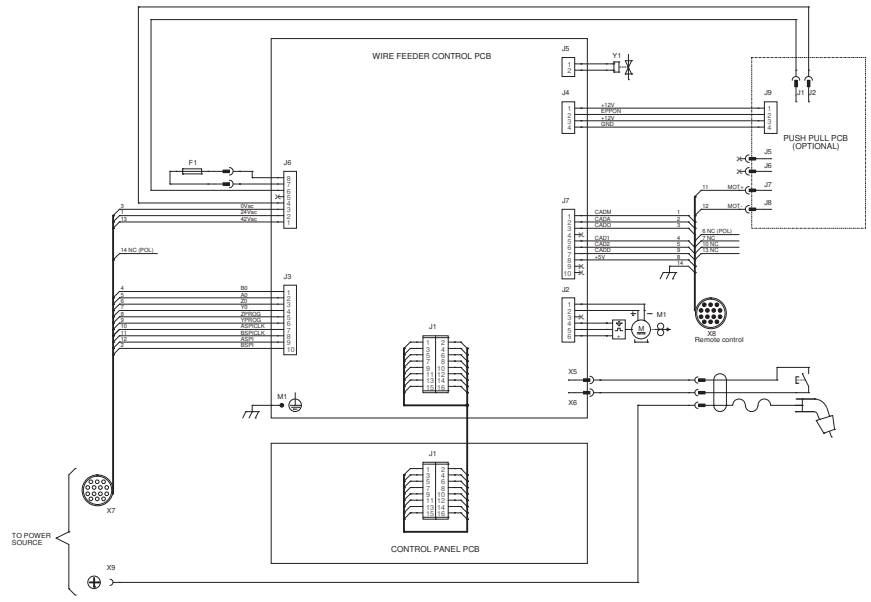

ELENCO PEZZI DI RICAMBIO
LISTE PIECES DETACHEES
SPARE PARTS LIST
ERSATZTEILLISTE
PIEZAS DE REPUESTO

INVERPULSE 60.40 WAVE

TELWIN

Esploso macchina, Dessin appareil, Machine drawing, Explosions Zeichnung des Geräts, Diseño seccionado maquina.

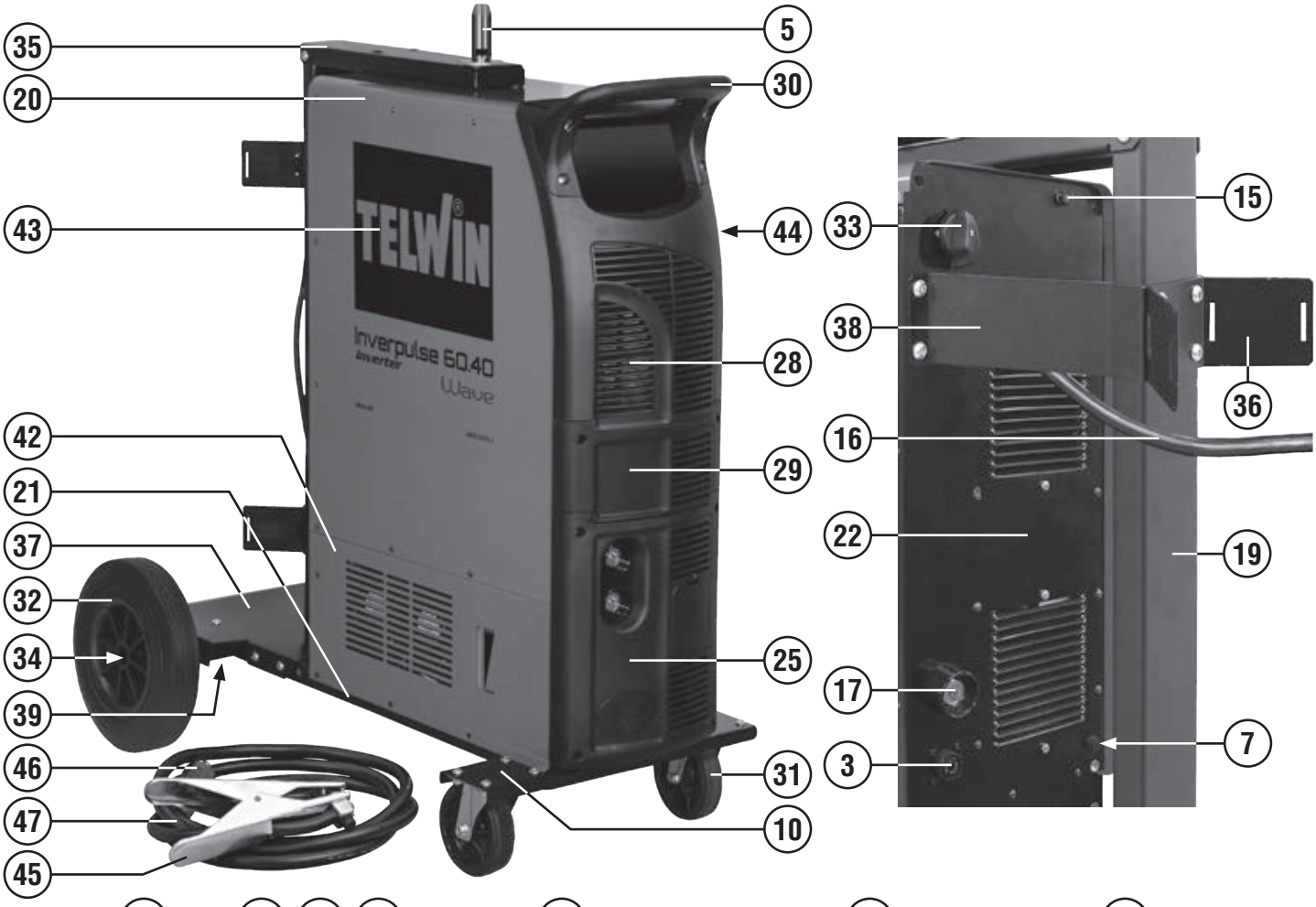

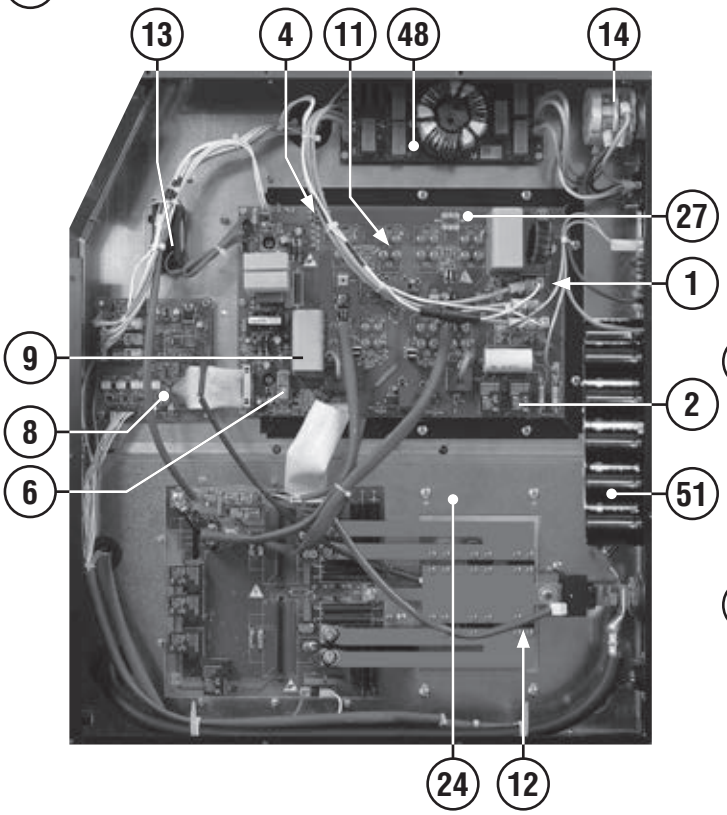

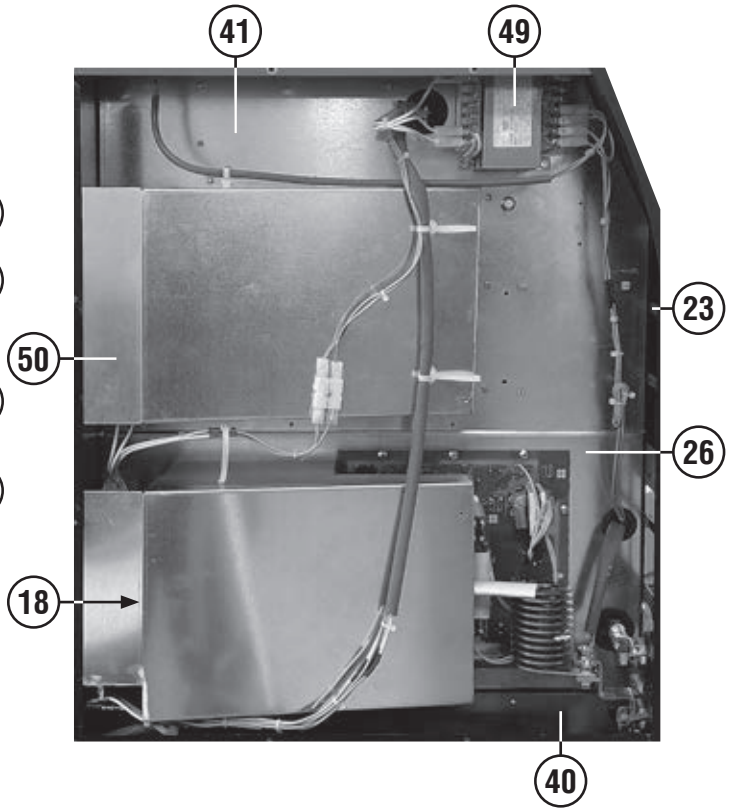

REF.	ELENCO PEZZI DI RICAMBIO PIECES DETACHEES SPARE PARTS LIST ERSATZTEILLISTE PIEZAS DE REPUESTO	CODICE CODE KODE
1	Ponte Pont Bridge Brücke Puente	111465
2	Rele Relais Relais Relais Conectador	111211
3	Cablaggio II° Cable II° Cable II° Kabel II° Cable II°	125185
4	Resistenza Resistance Resistance Widerstand Resistencia	116307
5	Perno Goujon Pin Zapfen Perno	689037
6	Rele' Relais Relais Relais Relais	116320
7	Fusibile Fusible Fuse Sicherung Fusible	122437
8	Kit scheda controllo Kit carte controle Control board kit Steuerungskarte kit Kit tarjeta control	982302
9	Condensatore Condensateur Condenser Kondensator Condensator	116740
10	Staffa supporto ruote Bride suport roues Wheel holding bracket Bügel f. Räderhalterung Estribo sosten ruedas	641099
11	Igbt gt80da120u 80a 1200v sot227 Igbt gt80da120u 80a 1200v sot227 Igbt gt80da120u 80a 1200v sot227 Igbt gt80da120u 80a 1200v sot227 Igbt gt80da120u 80a 1200v sot227	112020
12	Diodo Diode Diode Diode Diodo	113747
13	Cablaggio ventilatore Cable de ventilateur Fan cable Ventilatorskabel Cable de vendilador	125085
14	Commutatore Commutateur Switch Schalter Conmutador	121505
15	Lampada Temoin lumineux Lamp Kontrollampe Lamparilla de control	122709
16	Cavo alim.Fror 4g06.00 L=03.00 Cable alim. Fror 4g06.00 L=03.00 Mains cable fror 4g06.00 L=03.00 Netzkabel fror 4g06.00 L=03.00 Cable alim. Fror 4g06.00 L=03.00	132449
17	Presa atlas 70/95mmq Prise atlas 70/95mmq Socket atlas 70/95mmq Steckdose atlas 70/95mmq Enchufe atlas 70/95mmq	804198
18	Ventilatore Ventilateur Fan Ventilator Ventilador	152297
19	Kit colonna Kit colonne Column kit Spalte kit Kit columna	982062
20	Kit mantello Kit capot Cover kit Deckel kit Kit panel de cobertura	982061
21	Kit fondo Kit chassis Bottom kit Bodenteil kit Kit fondo	982060
22	Kit retro Kit partie arriere Back panel kit Rückseite kit Kit trasera	982301
23	Kit frontale Kit partie frontal Front panel kit Gerätefront kit Kit frontal	982091
24	Kit scheda secondario Kit fiche secondaire Secondary pcb kit Sekundaertrafokarte kit Kit tarjeta secundario	982090
25	Kit frontale inferiore Kit partie frontal inferieur Lower front panel kit Gerätefront unten kit Kit frontal inferior	982289
26	Diaframma inferiore Diaphragme inferieur Lower diaphragm Unten diaphragma Diafragma inferior	485095
27	Kit scheda primario Kit fiche primaire Primary pcb kit Primärtrafokarte kit Kit tarjeta primario	982089
28	Frontale superiore Partie frontal superieur Upper front panel Obere gerätefront Frontal superior	321320
29	Frontale Partie frontal Front panel Gerätefront Frontal	321241
30	Manico Poignee Handle Handgriff Manija	321279
31	Ruota con supporto Roue + support tournant Wheel + swivel support Rad + drehbarerhalter Rueda + sosten giratorio	321398
32	Ruota Roue Wheel Rad Rueda	321389
33	Assieme manopola per commutatore Set poigne pour commutateur Switch knob set Umschaltergriff set Set manija para conmutador	323101
34	Asse per ruote Axes pour roue Wheels axle Raederachse Eje por rueda	422940
35	Braccio Brace Arm Arm Brazo	641093
36	Staffa portabombola Etrier porte-bouteille Bottle-holder bracket Kasten für flasche Estribo porta bombona	641095
37	Supporto bombola Support bouteille Bottle holder Flaschenhalter Sosten bombona	641096
38	Supporto colonna Support colonne Column holder Säule halterung Soporte columna	641098
39	Kit staffa ruote Kit bride roues Wheels braket kit Rad buegel kit Kit estribo ruedas	982063
40	Ripiano Surface Surface Deckel Plano	645887
41	Diaframma superiore Diaphragme superieur Upper diaphragm Obere diaphragma Diafragma superior	484907
42	Fianco destro Partie lateral droite Right side panel Rechts seitenblech Flanco derecho	656234
43	Fianco destro Partie lateral droite Right side panel Rechts seitenblech Flanco derecho	656290
44	Fianco sinistro Partie lateral gauche Left side panel Links seitenblech Flanco isquierdo	656291
45	Toledo 600 pinza di massa 600a Toledo 600 pince de masse 600a Toledo 600 work clamp 600a Toledo 600 masseklemme 600a Toledo 600 pinza de masa 600a	804184
46	Spina atlas 70mmq Fiche atlas 70mmq Plug atlas 70mmq Stecker atlas 70mmq Enchufe atlas 70mmq	804201
47	Pinza di massa + cavo 70mmq 3m ax70 Pince de masse + cable 70mmq 3m ax70 Work clamp + cable 70mmq 3m ax70 Massezange + kabel 70mmq 3m ax70 Pinca de masa + cable 70mmq 3m ax70	804222
48	Kit scheda filtro ingresso Kit platine filtre input Input filter card kit Input filterkarte kit Kit tarjeta filtro input	980947
49	Kit trasformatore ausiliario Kit transformateur auxiliaire Auxiliary transformer kit Hilfstransformatorkit Kit transformador auxiliar	980958
50	Convogliatore Conveyeur Conveyor Luefterabdeckung Conveyor	485092
51	Kit scheda condensatori Kit platine condensateurs Condenser card kit Kondensatorkarte kit Kit tarjeta condensatores	982303

Schema elettrico, Schéma électrique, Diagram, Schaltplan, Esquema de conexiones.

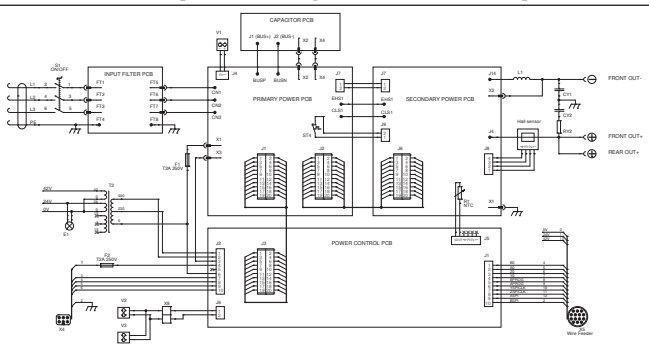

Esploso torcia, Dessin torche, Torch drawing, Schlauchpaket - Explosionszeichnung, Diseño seccionado antorcha.

722798 3m
722800 5m

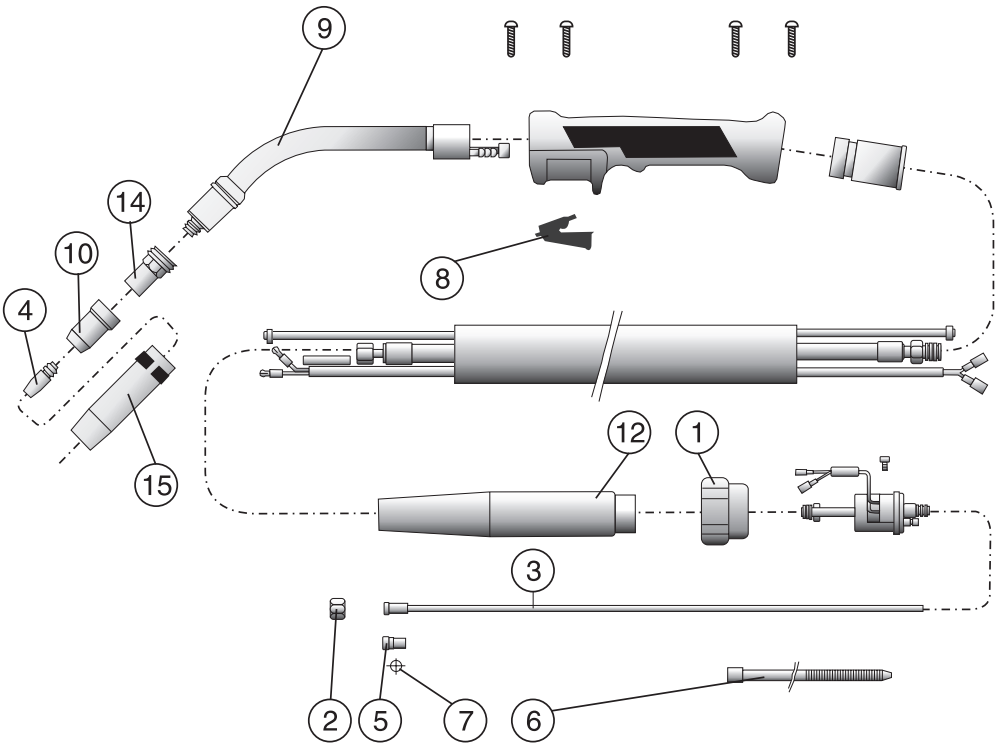

REF.	ELENCO PEZZI RICAMBIO TORCIA LISTE PIECES DETACHEES TORCHE SPARE PARTS LIST TORCH ERSATZTEILLISTE SCLAUCHPAKET PIEZAS DE REPUESTO ANTORCHA	CODICE CODE KODE
1	Ghiera fissaggio Embout fixage Ring nut Nutmutter Virola por fiyacion	722007
2	Dado fissaggio guaina Ecrou fixage gaine Liner nut Befestigungsmutter Dado por fiyacion vaina	722013
3	Guaina guidafilo d. 1-1,2 Mm 3 m Gaine pour fil d. 1-1,2 Mm 3 m Wire guide hose d. 1-1,2 Mm 3 m Drahtführungsseele d. 1-1,2 Mm 3 m Vaina guia hilo d. 1-1,2 Mm 3 m	742164
3	Guaina guidafilo ø 1,6-2mm 3m Gaine guide fil ø 1,6-2mm 3m Wire guide hose ø 1,6-2mm 3m Drahtführungsseele ø 1,6-2mm 3m Vaina guida alambre ø 1,6-2mm 3m	722814
3	Guaina guidafilo d. 1,2-1,6mm 3m gialla Gaine pour fil d. 1,2-1,6mm 3m jaune Wire guide hose d. 1,2-1,6mm 3m yellow Drahtführungsseele d. 1,2-1,6mm 3m gelbe Vaina guia hilo d. 1,2-1,6mm 3m amarilla	722795
3	Guaina guidafilo d. 1,0-1,2 3 M rossa Gaine pour fil d. 1,0-1,2 3 M rouge Wire guide hose d. 1,0-1,2 3 M red Drahtführungsseele d. 1,0-1,2 3 M rot Vaina guia hilo d.1,0-1,2 3 M roja	722689
3	Guaina guidafilo d. 1,6-2 Mm 3 m al Gaine pour fil d. 1,6-2 Mm 3 m al Wire guide hose d. 1,6-2 Mm 3 m al Drahtführungsseele d. 1,6-2 Mm 3 m al Vaina guia hilo d. 1,6-2 Mm 3 m al	722597
4	Tubetto di contatto d. 0,8 Mm m8 Tube contact d. 0,8 Mm m8 Contact tip d. 0,8 Mm m8 Kontaktdüse d. 0,8 Mm m8 Tubito de contacto d. 0,8 Mm m8	722581
4	Tubetto di contatto d. 1,6 Mm(cu cr zr) Tube contact d. 1,6 Mm (cu cr zr) Contact tip d. 1,6 Mm (cu cr zr) Kontaktdüse d. 1,6 Mm (cu cr zr) Tubito de contacto d. 1,6 Mm (cu cr zr)	742161
4	Tubetto di contatto d. 1,2 Mm(cu cr zr) Tube contact d. 1,2 Mm (cu cr zr) Contact tip d. 1,2 Mm (cu cr zr) Kontaktdüse d. 1,2 Mm (cu cr zr) Tubito de contacto d. 1,2 Mm (cu cr zr)	742160
4	Tubetto di contatto d. 1 Mm (cu cr zr) Tube contact d. 1 Mm (cu cr zr) Contact tip d. 1 Mm (cu cr zr) Kontaktdüse d. 1 Mm (cu cr zr) Tubito de contacto d. 1 Mm (cu cr zr)	742159
4	Tubetto di contatto d. 1 Mm Tube contact d. 1 Mm Contact tip d. 1 Mm Kontaktdüse d. 1 Mm Tubito de contacto d. 1 Mm	722582

REF.	ELENCO PEZZI RICAMBIO TORCIA LISTE PIECES DETACHEES TORCHE SPARE PARTS LIST TORCH ERSATZTEILLISTE SCLAUCHPAKET PIEZAS DE REPUESTO ANTORCHA	CODICE CODE KODE
4	Tubetto di contatto d. 1,2 Mm Tube contact d. 1,2 Mm Contact tip d. 1,2 Mm Kontaktdüse d. 1,2 Mm Tubito de contacto d. 1,2 Mm	722583
4	Tubetto di contatto d. 2 Mm al/flux Tube contact d. 2 Mm al/flux Contact tip d. 2 Mm al/flux Kontaktdüse d. 2 Mm al/flux Tubito de contacto d. 2 Mm al/flux	722772
4	Tubetto di contatto d. 1,6 Mm al/flux m8 Tube contact d. 1,6 Mm al/flux m8 Contact tip d. 1,6 Mm al/flux m8 Kontaktdüse d. 1,6 Mm al/flux m8 Tubito de contacto d. 1,6 Mm al/flux m8	722771
4	Tubetto di contatto d. 1,2 Mm al/flux m8 Tube contact d. 1,2 Mm al/flux m8 Contact tip d. 1,2 Mm al/flux m8 Kontaktdüse d. 1,2 Mm al/flux m8 Tubito de contacto d. 1,2 Mm al/flux m8	722770
4	Tubetto di contatto d. 1 Mm al/flux m8 Tube contact d. 1 Mm al/flux m8 Contact tip d. 1 Mm al/flux m8 Kontaktdüse d. 1 Mm al/flux m8 Tubito de contacto d. 1 Mm al/flux m8	722769
4	Tubetto contatto d.2,0 Tube contact d.2,0 Contact tip d.2,0 Kontaktroehrchen d.2,0 Tubito de contacto d.2,0	722586
4	Tubetto di contatto d. 1,6 Mm Tube contact d. 1,6 Mm Contact tip d. 1,6 Mm Kontaktroehrchen d. 1,6 Mm Tubito de contacto d. 1,6 Mm	722587
5	Nippel ferma guaina Nippel serre gaine Wire guide locking nipples Drahtseeleklemmnippel Nippel de bloqueo vaina	722599
5	Nipples ferma guaina Nipples serre gaine Wire guide locking nipples Drahtseeleklemmnippel Nipples de bloqueo vaina	722598
6	Tubetto ferma guaina Tuyau serre gaine Wire guide locking tube Drahtseeleklemmrohr Tubito de bloqueo vaina	722600
7	Anello or Anneau or Or ring Or ring Anillo or	722606
7	Anello or Bague or Or ring Or ring Anillo or	722601

REF.	ELENCO PEZZI RICAMBIO TORCIA LISTE PIECES DETACHEES TORCHE SPARE PARTS LIST TORCH ERSATZTEILLISTE SCLAUCHPAKET PIEZAS DE REPUESTO ANTORCHA	CODICE CODE KODE
8	Pulsante Poussoir Pushbutton Druckknopf Pulsador	722677
9	Lancia mt40 Lance mt40 Swan neck mt40 Brennerhals mt40 Encorvado mt40	722801
10	Diffusore gas isolante mt 40 Diffuseur gaz isolant mt 40 Insulating gas diffuser mt 40 Isolierte gas diffusor mt 40 Difusor gas aislante mt 40	722802
14	Supporto tubetto contatto mt40 Support tube contact mt40 Contact tip holder mt40 Kontaktröhrchen träger mt40 Sosten tubito de contacto mt40	722807
15	Ugello conico mt40 Buse conique mt40 Conical nozzle mt40 Konische düse mt40 Inyector conico mt40	722808
15	Ugello cilindrico mt40 Buse cylindrique mt40 Cylindrical nozzle mt40 Zylindrische düse mt40 Inyector cilindrico mt40	722809

Esploso torcia, Dessin torche, Torch drawing, Schlauchpaket - Explosionszeichnung, Diseño seccionado antorcha.

- Esploso torcia R.A. (Raffreddata ad acqua)
- Dessin torche R.A. (Refroide par eau)
- Drawing sectionalized torch R.A. (Water cooled)
- Zerlegte Zeichnung Schlauchpaket R.A. (Wasserkuhlung)
- Diseno seccionado antorcha R.A. (Enfriadar a agua)

722625 3m
742821 4m
722683 5m

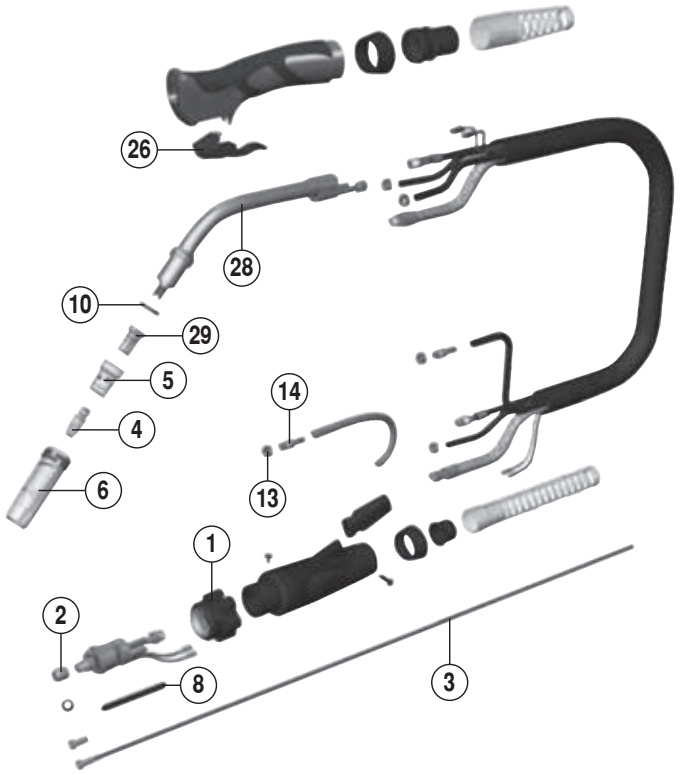

REF.	ELENCO PEZZI RICAMBIO TORCIA LISTE PIECES DETACHEES TORCHE SPARE PARTS LIST TORCH ERSATZTEILLISTE SCLAUCHPAKET PIEZAS DE REPUESTO ANTORCHA	CODICE CODE KODE
1	Ghiera fissaggio Embout fixage Ring nut Nutmutter Virola por fiyacion	722007
2	Dado fissaggio guaina Ecrou fixage gaine Liner nut Befestigungsmutter Dado por fiyacion vaina	722013
3	Guaina guidafilo ø1-1,2 tefl/graf.+Term. Gaine pour fil ø1-1,2 tefl/graf.+Term. Wire guide hose ø1-1,2 tefl/graf.+Term. Drahtführungsseele ø1-1,2 tefl/graf.+Te Vaina guia hilo ø1-1,2 tefl/graf.+Term.	742812
3	Guaina guidafilo ø 1,2-1,6 mm 3 m Gaine pour fil ø 1,2-1,6 mm 3 m Wire guide hose ø 1,2-1,6 mm 3 m Drahtführungsseele ø 1,2-1,6 mm 3 m Vaina guia hilo ø 1,2-1,6 mm 3 m	722588
3	Guaina guidafilo ø 1,0-1,2 mm 3 m Gaine pour fil ø 1,0-1,2 mm 3 m Wire guide hose ø 1,0-1,2 mm 3 m Drahtführungsseele ø 1,0-1,2 mm 3 m Vaina guia hilo ø 1,0-1,2 mm 3 m	722590
3	Guaina guidafilo ø 1,6-2,0 al teflon Gaine pour fil ø 1,6-2,0 al teflon Wire guide hose ø 1,6-2,0 al teflon Drahtführungsseele ø 1,6-2,0 al teflon Vaina guia hilo ø 1,6-2,0 al teflon	742811
3	Guaina g.F. D.2-2,4 Mt.3 Gaine guide fil d.2-2,4 M3 Wire guide hose d.2-2,4 M3 Drahtfuehrungsseele d.2-2,4 M3 Vaina guiadera alambre d. 2-2,4 M3	722820
4	Tubetto di contatto d. 0,8 Mm m8 Tube contact d. 0,8 Mm m8 Contact tip d. 0,8 Mm m8 Kontaktdüse d. 0,8 Mm m8 Tubito de contacto d. 0,8 Mm m8	722581
4	Tubetto di contatto d. 1 Mm Tube contact d. 1 Mm Contact tip d. 1 Mm Kontaktdüse d. 1 Mm Tubito de contacto d. 1 Mm	722582
4	Tubetto di contatto d. 1,2 Mm Tube contact d. 1,2 Mm Contact tip d. 1,2 Mm Kontaktdüse d. 1,2 Mm Tubito de contacto d. 1,2 Mm	722583
4	Tubetto di contatto ø 2,4 mm Tube contact ø 2,4 mm Contact tip ø 2,4 mm Kontaktdüse ø 2,4 mm Tubito de contacto ø 2,4 mm	722773
4	Tubetto contatto d.2,0 Tube contact d.2,0 Contact tip d.2,0 Kontaktroehrchen d.2,0 Tubito de contacto d.2,0	722586

REF.	ELENCO PEZZI RICAMBIO TORCIA LISTE PIECES DETACHEES TORCHE SPARE PARTS LIST TORCH ERSATZTEILLISTE SCLAUCHPAKET PIEZAS DE REPUESTO ANTORCHA	CODICE CODE KODE
4	Tubetto di contatto d. 1,6 Mm Tube contact d. 1,6 Mm Contact tip d. 1,6 Mm Kontaktroehrchen d. 1,6 Mm Tubito de contacto d. 1,6 Mm	722587
4	Tubetto di contatto d. 2 Mm al/flux Tube contact d. 2 Mm al/flux Contact tip d. 2 Mm al/flux Kontaktdüse d. 2 Mm al/flux Tubito de contacto d. 2 Mm al/flux	722772
4	Tubetto di contatto d. 1,6 Mm al/flux m8 Tube contact d. 1,6 Mm al/flux m8 Contact tip d. 1,6 Mm al/flux m8 Kontaktdüse d. 1,6 Mm al/flux m8 Tubito de contacto d. 1,6 Mm al/flux m8	722771
4	Tubetto di contatto d. 1,2 Mm al/flux m8 Tube contact d. 1,2 Mm al/flux m8 Contact tip d. 1,2 Mm al/flux m8 Kontaktdüse d. 1,2 Mm al/flux m8 Tubito de contacto d. 1,2 Mm al/flux m8	722770
4	Tubetto di contatto d. 1,6 Mm(cu cr zr) Tube contact d. 1,6 Mm (cu cr zr) Contact tip d. 1,6 Mm (cu cr zr) Kontaktdüse d. 1,6 Mm (cu cr zr) Tubito de contacto d. 1,6 Mm (cu cr zr)	742161
4	Tubetto di contatto d. 1,2 Mm(cu cr zr) Tube contact d. 1,2 Mm (cu cr zr) Contact tip d. 1,2 Mm (cu cr zr) Kontaktdüse d. 1,2 Mm (cu cr zr) Tubito de contacto d. 1,2 Mm (cu cr zr)	742160
4	Tubetto di contatto d. 1 Mm (cu cr zr) Tube contact d. 1 Mm (cu cr zr) Contact tip d. 1 Mm (cu cr zr) Kontaktdüse d. 1 Mm (cu cr zr) Tubito de contacto d. 1 Mm (cu cr zr)	742159
4	Tubetto di contatto d. 1 Mm al/flux m8 Tube contact d. 1 Mm al/flux m8 Contact tip d. 1 Mm al/flux m8 Kontaktdüse d. 1 Mm al/flux m8 Tubito de contacto d. 1 Mm al/flux m8	722769
5	Diffusore gas isolante mt 501 Diffuseur gaz isolant mt 501 Insulating gas diffuser mt 501 Isolierte gas diffusor mt 501 Difusor gas aislante mt 501	722593
6	Ugello puntatura Buse pointage Spot welding nozzle Punktschweissduese Inyector por puntos	722594
6	Ugello cilindrico mt500 Buse cylindrique mt500 Cylindrical nozzle mt500 Zylindrische düse mt500 Inyector cilindrico mt500	722595
6	Ugello conico mt500 Buse conique mt500 Conical nozzle mt500 Konische düse mt500 Inyector conico mt500	722585

REF.	ELENCO PEZZI RICAMBIO TORCIA LISTE PIECES DETACHEES TORCHE SPARE PARTS LIST TORCH ERSATZTEILLISTE SCLAUCHPAKET PIEZAS DE REPUESTO ANTORCHA	CODICE CODE KODE
8	Tubetto ferma guaina Tuyau serre gaine Wire guide locking tube Drahtseeleklemmrohr Tubito de bloqueo vaina	722600
10	Rondella isolante Rondelle isolante Insulating washer Isolierschraube Arandela aislante	722603
13	Fascetta Collier Hose ring Schelle Cintura	232114
14	Riduzione innesti rapidi Reducteur Reduction Schnelle kupplungreduktion Reduccion inyertos rapidos	722608
26	Pulsante Poussoir Pushbutton Druckknopf Pulsador	722677
28	Lancia mt500 Lance mt500 Swan neck mt500 Brennerhals mt500 Encorvado mt500	722708
29	Supporto tubetto contatto mt500 Support tube contact mt500 Contact tip holder mt500 Kontaktröhrchen träger mt500 Sosten tubito de contacto mt500	722709

ELENCO PEZZI DI RICAMBIO
LISTE PIECES DETACHEES
SPARE PARTS LIST
ERSATZTEILLISTE
PIEZAS DE REPUESTO

TI 60.40 WIREFEEDER

TELWIN®

Esploso macchina, Dessin appareil, Machine drawing, Explosions Zeichnung des Geräts, Diseño seccionado maquina.

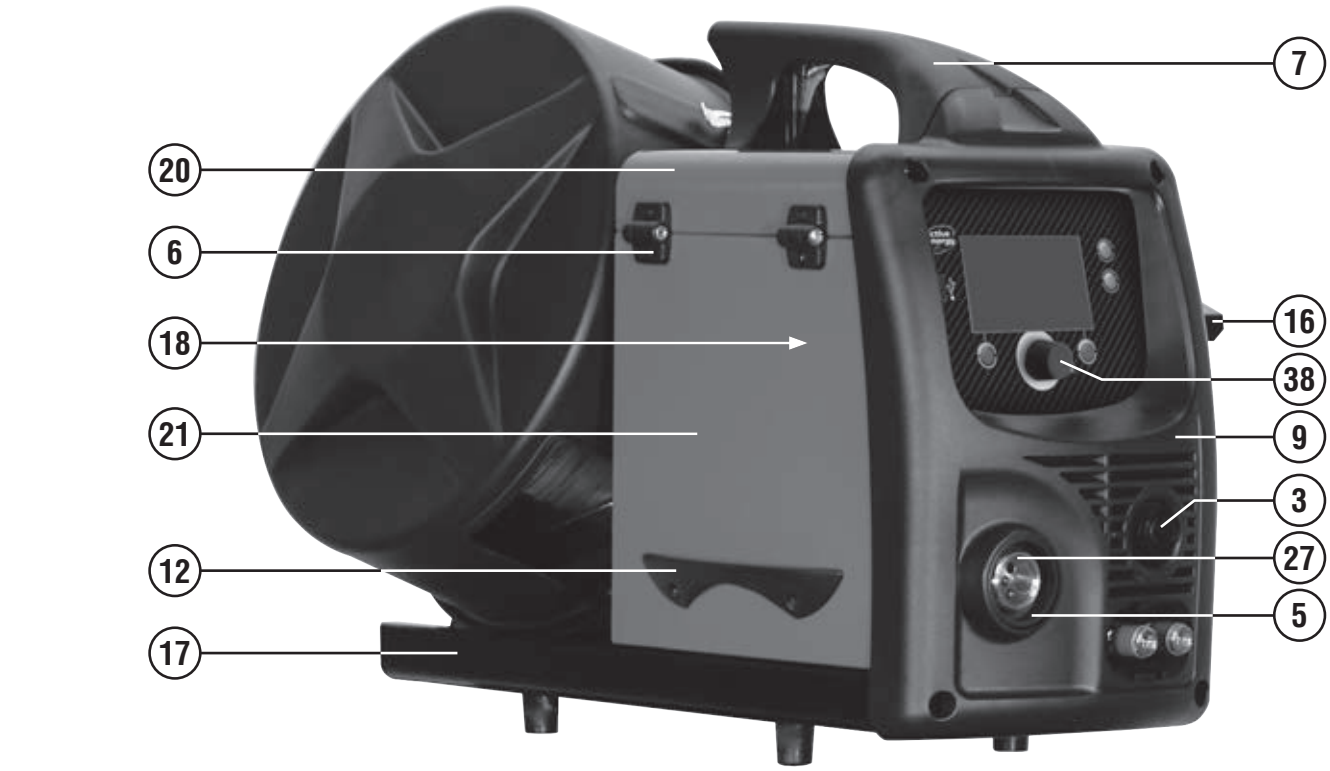

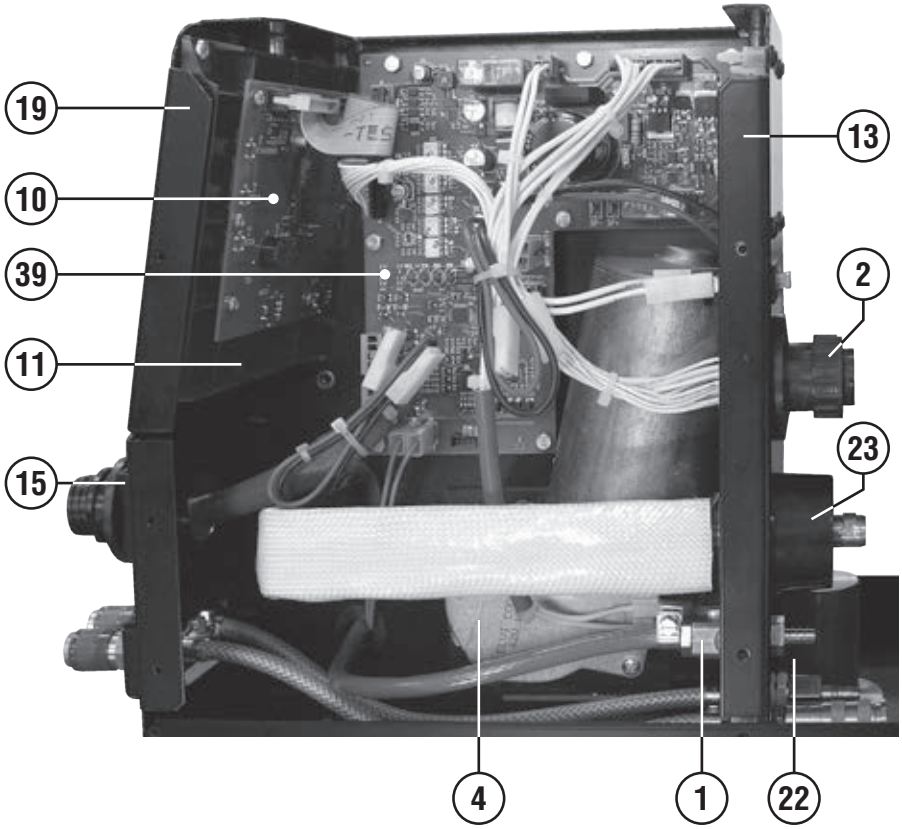

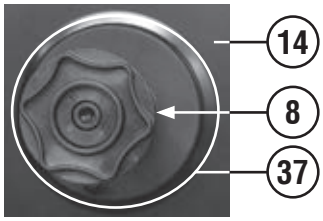

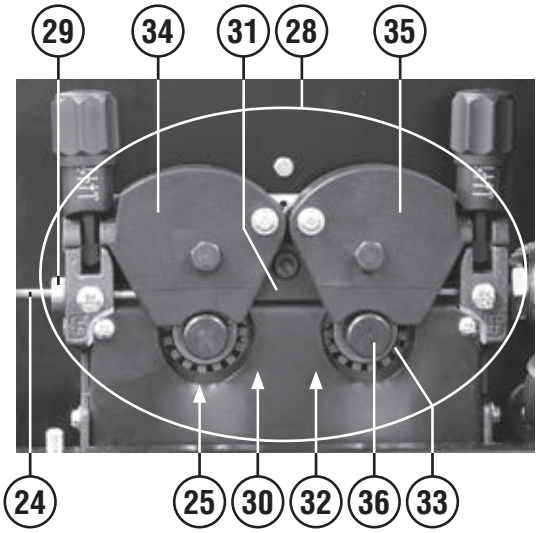

REF.	ELENCO PEZZI DI RICAMBIO PIECES DETACHEES SPARE PARTS LIST ERSATZTEILLISTE PIEZAS DE REPUESTO	CODICE CODE KODE
1	Elettrovalvola Electrovanne Electrovalve Elektroventil Electrovalvula	121801
2	Cablaggio traino Cable devidoir Wirefeeder cable Drahtvorschubskabel Cable alimentador de hilo	125157
3	Cablaggio connettore Cable connecteur Connector cable Anschlusskabel Cable conectador	125156
4	Motorino trainafilo Moteur pour devidoir Wire feed motor Drahtvorschubmotor Motor por arrastre hilo	153029
5	Protezione attacco torcia Support isolant torche Torch connection protection Brennersisolierlager Sosten isolator antorcha	312105
6	Assieme cerniera Charnière set Hinge set Scharnier set Bisagra set	312382
7	Manico Poignee Handle Handgriff Manija	312420
8	Distanziale per aspo Entretoise pour support bobine Reel spacer Distanzstueck Espàciador por aspa	321210
9	Kit frontale Kit partie frontal Front panel kit Gerätefront kit Kit frontal	982293
10	Kit scheda tft Kit platine tft Tft card kit Tft karte kit Kit tarjeta tft	982305
11	Kit supporto display Kit support display Display holder kit Display halterung kit Kit soporte display	982288
12	Maniglia Poignee Handle Handgriff Manija	322590
13	Retro Partie arriere Back panel Rückseite Trasera	642814
14	Staffa Bride Braket Buegel Estribo	645406

REF.	ELENCO PEZZI DI RICAMBIO PIECES DETACHEES SPARE PARTS LIST ERSATZTEILLISTE PIEZAS DE REPUESTO	CODICE CODE KODE
15	Supporto presa Support prise Socket holder Steckdose halterung Soporte enchufe	645675
16	Gancio appendi torcia Accrocheur torche Torch hook Haken fuer brenner Gancho fijacion antorcha	645704
17	Assieme fondo Set chassis Bottom set Bodenteil set Set fondo	645869
18	Protezione scheda Protection fiche Card cover Kartedeckel Proteccion tarjeta	645871
19	Frontale Partie frontal Front panel Gerätefront Frontal	645868
20	Mantello Capot Cover Deckel Panel de cobertura	651258
21	Sportello Guichet Door Tür Portezuela	651259
22	Kit supporto traino Kit support devidoir Wirefeeder holding kit Drahtvorschubhalterungskit Kit sosten alimentador de hilo	982294
23	Spina fissa ax mmq.70/95 Fiche atlas ax 70/95 Atlas plug ax 70/95 Atlas stecker ax 70/95 Enchufe atlas ax 70/95	804220
24	Kit guaina entrata motore Kit gaine entree moteur Gas hose kit Drahtfuehrungsseelekit Kit vaina guiadera alambre	990873
25	Rullino traino 4r ø 0.8fe-1.0fe “p-k” Galet 4r ø 0.8fe-1.0fe “p-k” Feed roll 4r ø 0.8fe-1.0fe “p-k” Vorschubrolle 4r ø 0.8fe-1.0fe “p-k” Roldana 4r ø 0.8fe-1.0fe “p-k”	722227
26	Rullino traino 4r ø 1.2fe-1.6fe “p-k” Galet 4r ø 1.2fe-1.6fe “p-k” Feed roll 4r ø 1.2fe-1.6fe “p-k” Vorschubrolle 4r ø 1.2fe-1.6fe “p-k” Roldana 4r ø 1.2fe-1.6fe “p-k”	722241
27	Attacco torcia Attelage torche Torch connection Schlauchpacketanschluss Enghanche antorcha	723067
28	Gruppo traino Dévidoir Wire feed assy Drahtvorschub Arrastre hilo	723096

REF.	ELENCO PEZZI DI RICAMBIO PIECES DETACHEES SPARE PARTS LIST ERSATZTEILLISTE PIEZAS DE REPUESTO	CODICE CODE KODE
29	Entrata guidafilo Entree guide fil Wire guide inlet Drahtfuehrungsseeleeingang Entrata vaina guiadera alambre	742064
30	Vite blocca ingranaggio Vis bloc engrenage Gearblocking screw Zahnradhalterschraube Tornillo bloqueo engranaje	742079
31	Guidafilo intermedio Guide fil Wire guide Drahtfuehrungsseele Vaina guiadera alambre	742121
32	Ingranaggio motore Engrenage motor Motor drive gear Motorszahnrad Engranaje motor	742155
33	Adattatore Adapteur Adapter Zahnrad Adaptador	742166
34	Ancora controrullino sinistra Ancre galet gauche Left anchor for pressure roller Linke anker fuer gegenrolle Ancora para contra roldana izquierdo	742167
35	Ancora controrullino destra Ancre galet droite Right anchor for pressure roller Rechte anker fuer gegenrolle Ancora para contra roldana derecho	742168
36	Vite bloccarullino Vis ferme galet Rollerfixing screw Rollerhalterschraube Tornillo bloque roldana	742397
37	Kit aspo 15kg Kit support bobine 15kg Reel kit 15kg Wickler kit 15kg Kit aspa 15kg	981703
38	Kit manopola encoder d.29 Kit poignee encoder d.29 Encoder knob kit d.29 Encodergriff kit d.29 Kit manija encoder d.29	982070
39	Kit scheda controllo Kit carte controle Control board kit Steuerungskarte kit Kit tarjeta control	982304

Schema elettrico, Schéma électrique, Diagram, Schaltplan, Esquema de conexiones.

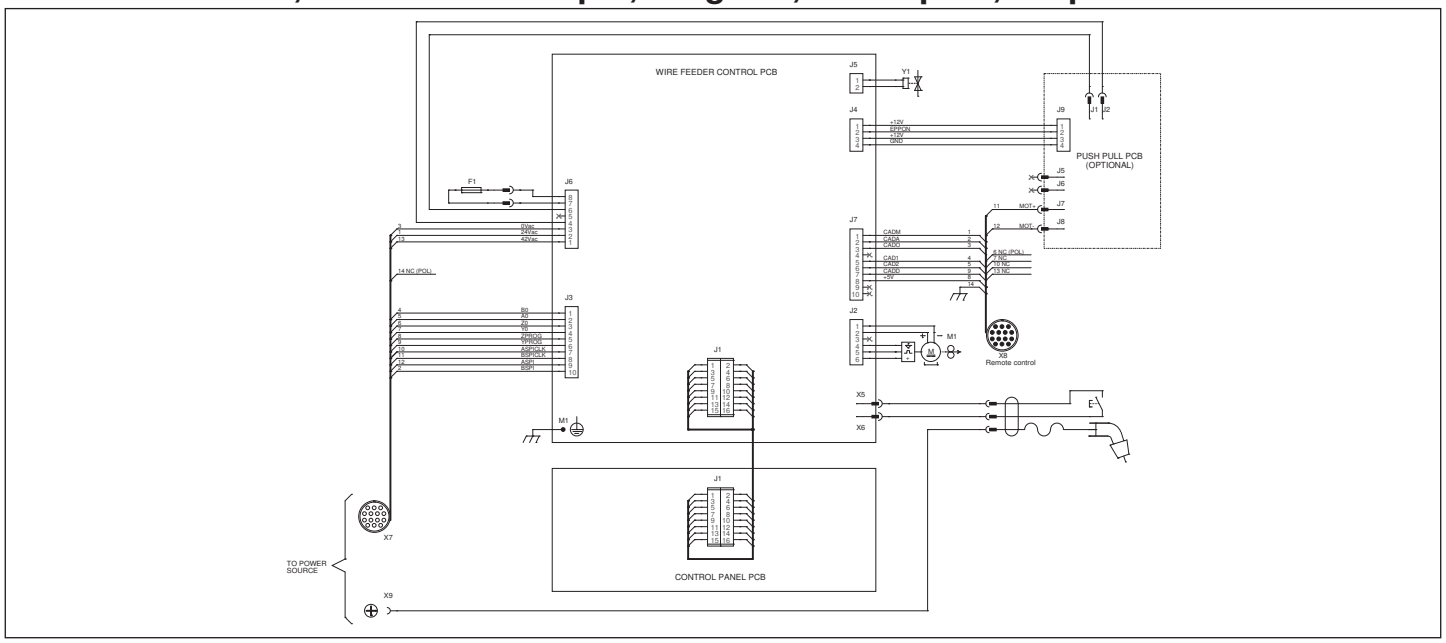

ELENCO PEZZI DI RICAMBIO
LISTE PIECES DETACHEES
SPARE PARTS LIST
ERSATZTEILLISTE
PIEZAS DE REPUESTO

TURNING TABLE

Esploso macchina, Dessin appareil, Machine drawing, Explosions Zeichnung des Geräts, Diseño seccionado maquina.

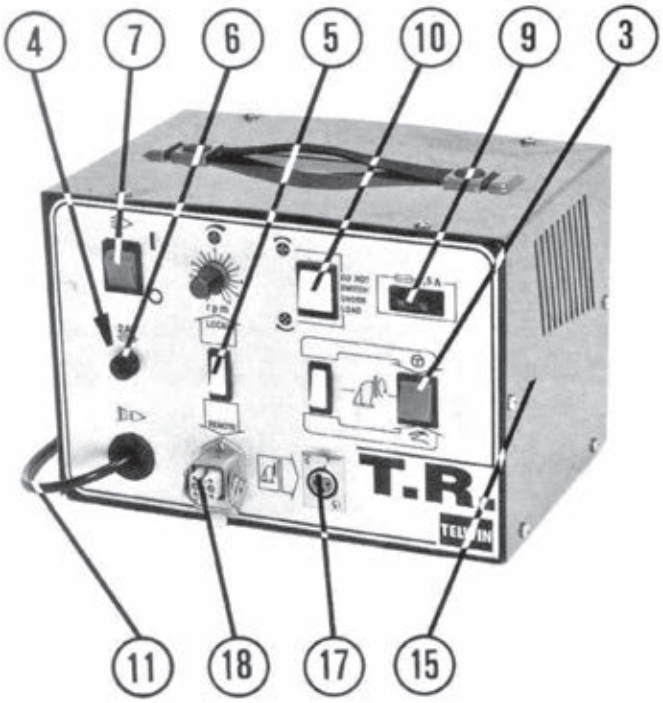

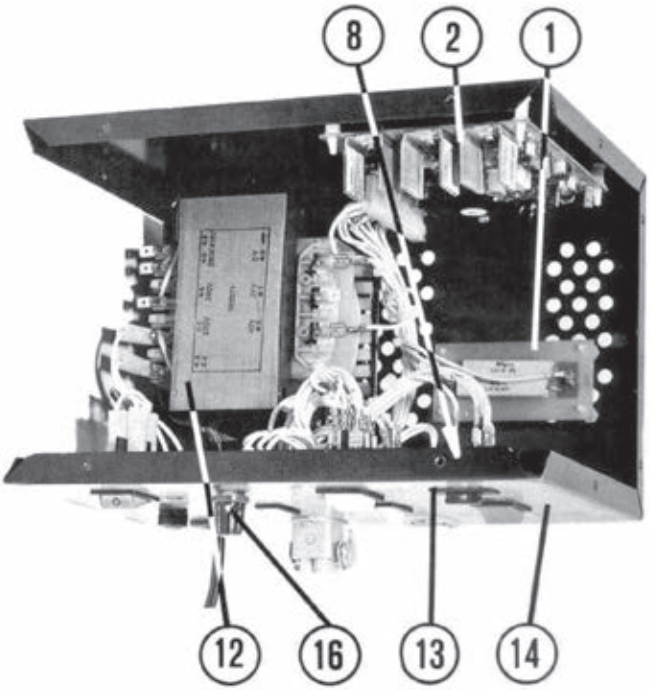

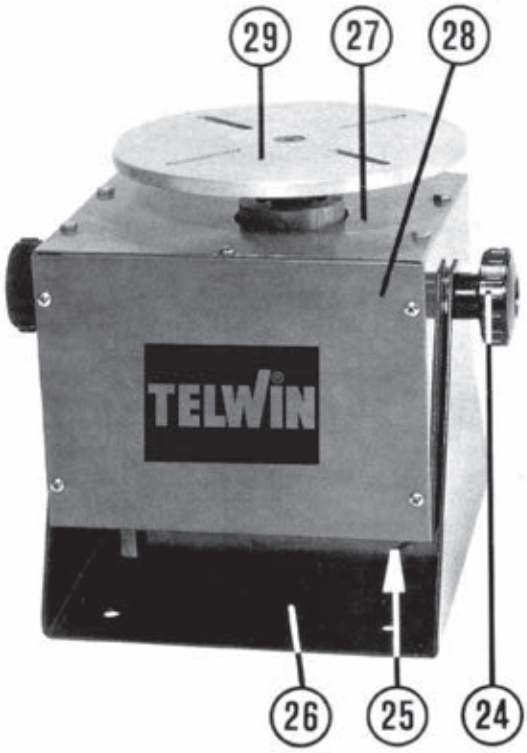

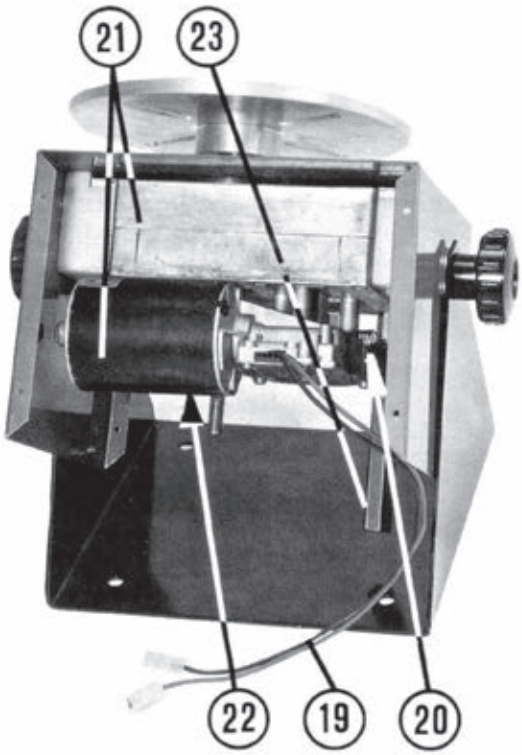

REF.	ELENCO PEZZI DI RICAMBIO PIECES DETACHEES SPARE PARTS LIST ERSATZTEILLISTE PIEZAS DE REPUESTO	CODICE CODE KODE
1	Scheda resistenze traino Platine resistance devidoir Wire feed resistance card Drahtvorschub widerstand karte Tarjeta resistencia alim. De hilo	114637
2	Kit scheda controllo traino 4t Kit carte controle de devidoir 4t 4t wire feeder control board kit 4t drahtvorschub steuerungskarte kit Kit tarjeta control alimentador hilo 4t	980670
3	Pulsante Poussoir Pushbutton Druckknopf Pulsador	121191
4	Fusibile Fusible Fuse Sicherung Fusible	122437
5	Deviatore Gareur Switch Schalter Interruptor	122400
6	Portafusibile Porte fusible Fuse holder Sicherungshalter Porta fusible	122159
7	Interruttore Interrupteur Switch Schalter Interruptor	122725
8	Portafusibile Support fusible Fuse holder Sicherungshalter Soporte fusible	122589
9	Fusibile Fusible Fuse Sicherungsdraht Fusible	122742
10	Deviatore Gareur Switch Schalter Interruptor	122745
11	Cavo alim. 3g0.75 1.5m spina schuko Cable al. 3g0.75 1.5m fiche schuko Mains cable 3g0.75 1.5m schuko plug Netzkabel 3g0.75 1.5m schuko steck. Cable alim. 3g0.75 1.5m esp. Schuko	132085
12	Trasformatore ausiliario Transformateur auxiliaire Auxiliary transformer Hilfstransformator Transformador auxiliar	164269
13	Portafusibile Portefusible Fuseholder Sicherungshalter Porte fusible	322238
14	Fondo Chassis Bottom Bodenteil Fondo	644061
15	Mantello Capot Cover Deckel Panel de cobertura	650013
16	Kit manopola Kit poignee Switch knob kit Schaltergriff kit Kit manija	990328
17	Presa Prise Socket Steckdose Tomacorriente	122744
18	Kit presa Kit prise Socket kit Steckdosekit Kit tomacorriente	990330
19	Cavo collegamento Cable de connection Connection cable Anschlusskabel Cable conexion	123216
20	Treccia rame Fil cuivre Copper wire Kupferdraht Hilo sulfatado	133180
21	Motore + ingranaggio Moteur + engrenage Motor + gear Motor + zahnrad Motor + engranaje	153030
22	Collare per collegamento treccia Collier pour branchement tresse Plait connection collar Band fuer flechtenanschluss Collar para conexion de trenza	252006
23	Esagono per collegamento massa Hexagone pour branchement masse Work cable connection hexagon Sechseck fuer masseanschluss Hexagono para conexion de masa	252007
24	Volantino Volant Handwheel Handrad Volante	312098
25	Pressacavo Presse cable Cable bushing Kabelhalter Prensa cable	322112
26	Supporto Support Holder Halterung Sosten	644052
27	Mantello Capot Cover Deckel Panel de cobertura	650014
28	Fondo Chassis Bottom Bodenteil Fondo	655598
29	Piatto girevole Table tournante Turning table Schweissdrehtisch Mesa giratoria	691001
30	Maniglia Poignee Handle Handgriff Manija	312009

Schema elettrico, Schéma électrique, Diagram, Schaltplan, Esquema de conexiones.

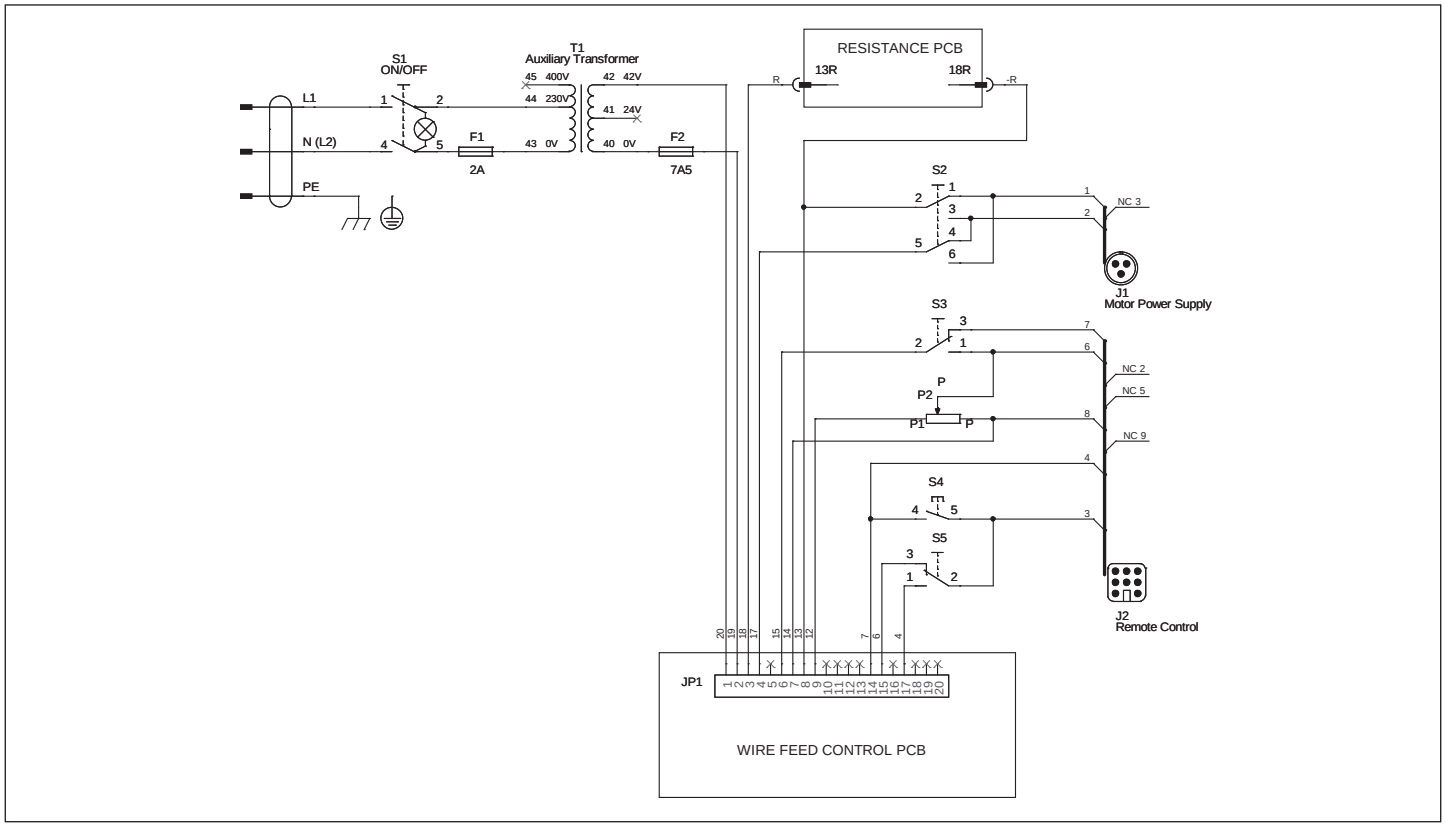

ELENCO PEZZI DI RICAMBIO
LISTE PIECES DETACHEES
SPARE PARTS LIST
ERSATZTEILLISTE
PIEZAS DE REPUESTO

TX 70 WIREFEEDER

TELWIN®

Esploso macchina, Dessin appareil, Machine drawing, Explosions Zeichnung des Geräts, Diseño seccionado maquina.

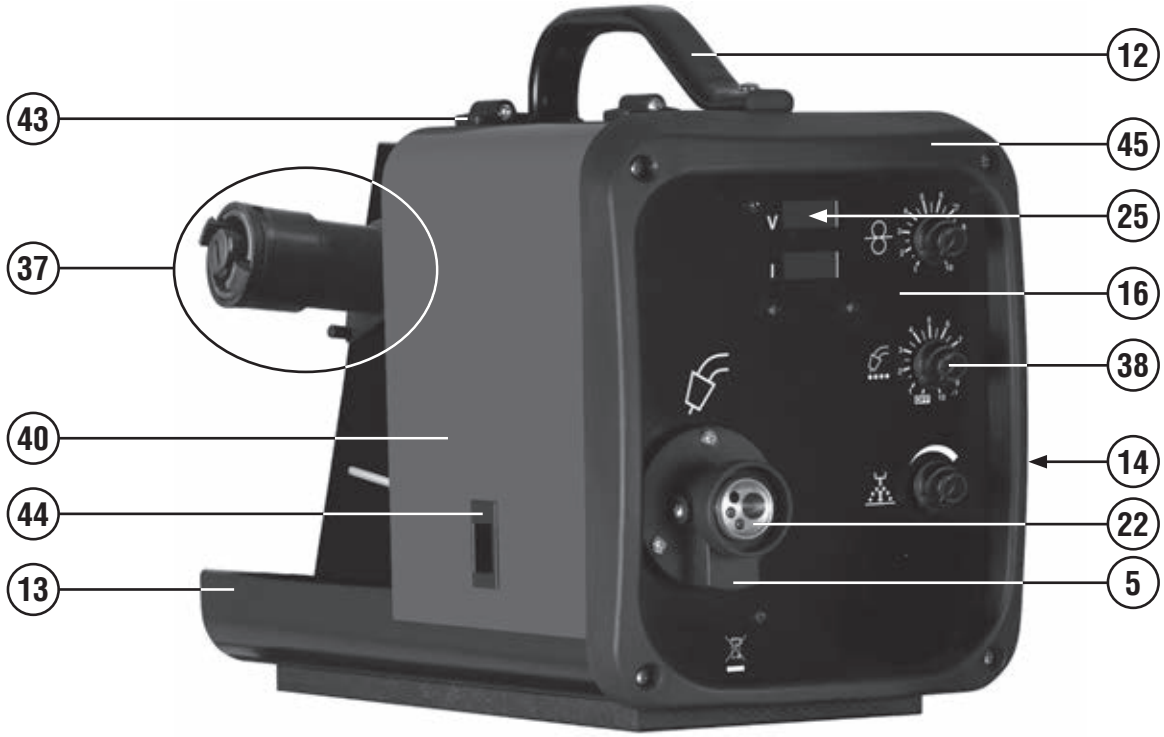

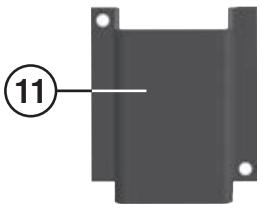

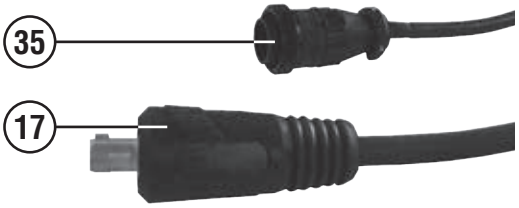

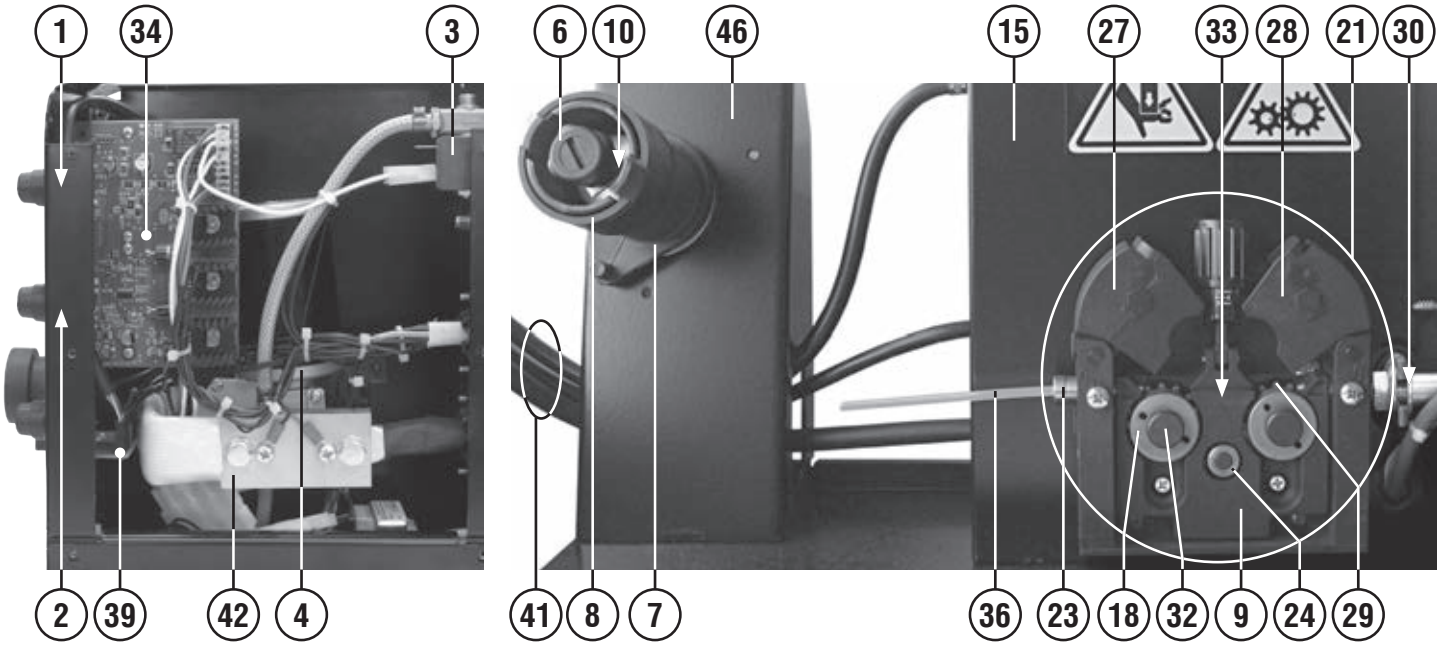

REF.	ELENCO PEZZI DI RICAMBIO PIECES DETACHEES SPARE PARTS LIST ERSATZTEILLISTE PIEZAS DE REPUESTO	CODICE CODE KODE
1	Potenziometro Potentiometre Potentiometer Potentiometer Potenciometro	116411
2	Potenziometro Potentiometre Potentiometer Potentiometer Potenciometro	113574
3	Elettrovalvola Electrovanne Electrovalve Elektroventil Electrovalvula	121801
4	Motore Moteur Motor Motor Motor	153033
5	Protezione attacco torcia Support isolant torche Torch connection protection Brennersisolierlager Sosten isolator antorcha	312105
6	Volantino per aspo Volant pour support bobine Reel handwheel Wicklerhandrad Volant por aspa	312137
7	Aspo Support bobine Reel Wickler Aspa	322081
8	Distanziale Entretoise Spacer Abstandstueck Anillo por distanciar	322180
9	Protezione Protecion Cover Deckel Proteccion	322814
10	Molla per aspo Ressort pour support bobine Reel spring Wicklerfeder Muelle por aspa	452057
11	Gancio appendi torcia Accrocheur torche Torch hook Haken fuer brenner Gancho fijacion antorcha	644444
12	Maniglia Poignee Handle Handgriff Manija	645153
13	Fondo Chassis Bottom Bodenteil Fondo	645689
14	Mantello Capot Cover Deckel Panel de cobertura	655411
15	Retro Partie arriere Back panel Rueckseite Trasera	645687
16	Frontale Partie frontal Front panel Geraetefront Frontal	642445
17	Spina atlas 70mmq Fiche atlas 70mmq Atlas plug 70mmq Atlas stecker 70mmq Enchufe atlas 70mmq	712041
18	Rullino traino 4r ø0.6fe-0.8/0.9fe “p-k” Galet 4r ø 0.6fe-0.8/0.9fe “p-k” Feed roll 4r ø 0.6fe-0.8/0.9fe “p-k” Vorschubrolle 4r ø 0.6fe-0.8/0.9fe “p-k” Roldana 4r ø 0.6fe-0.8/0.9fe “p-k”	742576
19	Rullino traino 4r ø 0.8fe-1.0fe “p-k” Galet 4r ø 0.8fe-1.0fe “p-k” Feed roll 4r ø 0.8fe-1.0fe “p-k” Vorschubrolle 4r ø 0.8fe-1.0fe “p-k” Roldana 4r ø 0.8fe-1.0fe “p-k”	722227
20	Rullino traino 4r ø 1.2fe-1.6fe “p-k” Galet 4r ø 1.2fe-1.6fe “p-k” Feed roll 4r ø 1.2fe-1.6fe “p-k” Vorschubrolle 4r ø 1.2fe-1.6fe “p-k” Roldana 4r ø 1.2fe-1.6fe “p-k”	722241
21	Traino 4 rulli Devidoir 4 rouleaux 4 Roll wirefeeder 4 Räder drahtvorschub Alimendator de hilo 4 rodillos	981928
22	Attacco torcia Attelage torche Torch connection Schlauchpacketanschluss Enghanche antorcha	723067
23	Entrata guidafilo Entree guide fil Wire guide inlet Drahtfuehrungsseeleeingang Entrata vaina guiadera alambre	742064
24	Adattatore Adapteur Adapter Zahnrad Adaptador	742166
25	Scheda voltmetro amperometro Platine voltmetre amperemetre Voltmeter ampermeter board Voltmeter-amperemeterkarte Tarjeta voltimetro amperimetro	117300
26	Rullino traino 4r ø 0.8al-1.0al “p-k” Galet 4r ø 0.8al-1.0al “p-k” Feed roll 4r ø 0.8al-1.0al “p-k” Vorschubrolle 4r ø 0.8al-1.0al “p-k” Roldana 4r ø 0.8al-1.0al “p-k”	742304
27	Ancora controrullino sinistra Ancre contre-galet gauche Left anchor for pressure roller Linker anker für gegenrolle Ancora izquierda para contra roldana	981929
28	Ancora controrullino destra Ancre contre-galet droit Right anchor for pressure roller Rechter anker für gegenrolle Ancora derecha para contra roldana	981930
29	Ingranaggio motore Engrenage motor Motor drive gear Motorszahnrad Engranaje motor	742348
30	Tubo capillare ø 2x5 Tuyau capillaire ø 2x5 Wire conduit ø 2x5 Kapillarrohr ø 2x5 Tubo capilar ø 2x5	722358
31	Rullino traino 4r ø 1.0fe-1.2fe “p-k” Galet 4r ø 1.0fe-1.2fe “p-k” Feed roll 4r ø 1.0fe-1.2fe “p-k” Vorschubrolle 4r ø 1.0fe-1.2fe “p-k” Roldana 4r ø 1.0fe-1.2fe “p-k”	742366
32	Vite bloccarullino Vis ferme galet Rollerfixing screw Rollerhalterschraube Tornillo bloque roldana	742397
33	Ingranaggio Engrenages Gears Zahnrad Engranaje	742590
34	Kit scheda controllo timer Kit carte controle timer Timer control pcb kit Timer steuerungskarte kit Kit tarjeta control timer	980714
35	Kit connettore 14 contatti Kit connecteur 14 contacts 14 Contacts connector kit Kit 14 kontakte verbinder Kit conectador 14 contactos	990028
36	Kit guaina entrata motore Kit gaine entree moteur Gas hose kit Drahtfuehrungsseelekit Kit vaina guiadera alambre	990097
37	Kit aspo Kit support bobine Reel kit Wickler kit Kit aspa	990264
38	Manopola Poignee Knob Griff Manija	121424
39	Scheda potenziometro Platine potentiometre Potentiometer module Potentiometerskarte Placa potenciometro	117299
40	Sportello Guichet Door Tuer Portezuela	655412
41	Cablaggio collegamento Cable de connection Connection cable Verbindungskabel Cable de conexion	124837
42	Shunt per amperometro Shunt pour amperemetre Shunt for ammeter Shunt fuer ampermeter Shunt para amperometro	152254
43	Assieme cerniera Charnière set Hinge set Scharnier set Bisagra set	312382
44	Chusura a slitta Fermeture Sliding shutter Verschluss Cierre plastico	322487
45	Cornice Cadre Frame Rahmen Marco	322648
46	Staffa Bride Braket Buegel Estribo	645157

Schema elettrico, Schéma électrique, Diagram, Schaltplan, Esquema de conexiones.

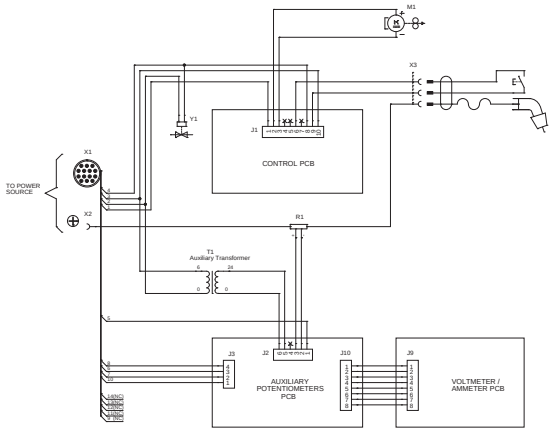

ELENCO PEZZI DI RICAMBIO
LISTE PIECES DETACHEES
SPARE PARTS LIST
ERSATZTEILLISTE
PIEZAS DE REPUESTO

TECNICA TIG 190 DC-LIFT VRD

Esploso macchina, Dessin appareil, Machine drawing, Explosions Zeichnung des Geräts, Diseño seccionado maquina.



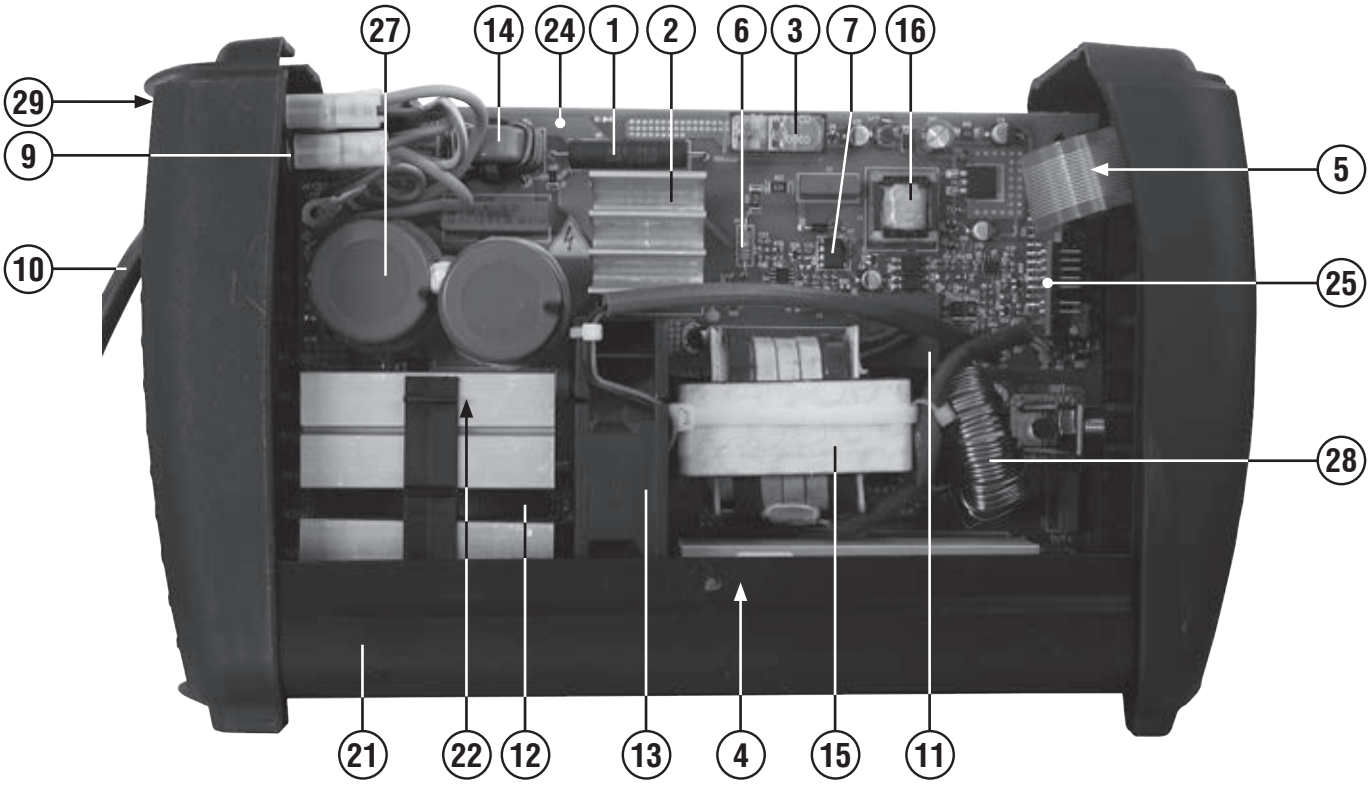

REF.	ELENCO PEZZI DI RICAMBIO PIECES DETACHEES SPARE PARTS LIST ERSATZTEILLISTE PIEZAS DE REPUESTO	CODICE CODE KODE
1	Res. Filo 47r 8w 5% Res. Fil 47r 8w 5% Res. Wire 47r 8w 5% Res. Draht 47r 8w 5% Res. Hilo 47r 8w 5%	112048
2	Raddrizzatore monofase Redresseur monophase Single-phase rectifier Einphasiger gleichrichter Rectificador monofasico	112357
3	Rele' Relais Relais Relais Relais	116320
4	Diodo Diode Diode Diode Diodo	116839
5	Encoder Encoder Encoder Encoder Encoder	116959
6	Res. Met. 10r 2w 5% fuse Res. Met. 10r 2w 5% fuse Res. Met. 10r 2w 5% fuse Res. Met. 10r 2w 5% fuse Res. Met. 10r 2w 5% fuse	116962
7	Pwm controller Pwm controller Pwm controller Pwm controller Pwm controller	116966
8	Manopola per potenziometro Poignee pour potentiometre Potentiometer knob Potentiometergriff Manija por potenciometro	121547
9	Interruttore Interrupteur Switch Schalter Interruptor	122381
10	Cavo alim. 3g1.5 2 M spina schuko Cable alim. 3g1.5 2 M fiche schuko Mains cable 3g1.5 2 M schuko plug Netzkabel 3g1.5 2 M schuko stecker Cable alim. 3g1.5 2 M espina schuko	132155
11	Trasformatore di corrente Transformateur de courant Current transformer Stromwandler Transformador de corriente	152230
12	Trasformatore impulsi Transformateur d'impulsions Impulse transformer Impuls-transformator Transformador de impulsos	152247
13	Ventilatore Ventilateur Fan Ventilator Ventilador	152904
14	Induttanza filtro Inductance filter Filter inductance Filter drossel Induccion filtro	164741
15	Trasformatore potenza Transformateur puissance Power transformer Leistungstransformator Transformador potencia	169665
16	Trasformatore x flyback Transformateur x flyback Transformer x flyback Transformator x flyback Transformador x flyback	169700
17	Assieme manico Set poignee Handle set Handgriff set Set manija	312434
18	Frontale Partie frontal Front panel Geraetefront Frontal	322950
19	Retro Partie arriere Back panel Rueckseite Trasera	322951
20	Presa atlas 25mmq Prise atlas 25mmq Socket atlas 25mmq Steckdose atlas 25mmq Enchufe atlas 25mmq	712000
21	Kit fondo Kit chassis Bottom kit Basis bodenteil Kit fondo	980345
22	Kit igbt + diodo Kit igbt + diode Kit igbt + diode Kit igbt + diode Kit igbt + diodo	980614
23	Kit mantello Kit capot Cover kit Deckelkit Kit panel de cobertura	981103
24	Kit scheda completa Kit fiche complete Complete pcb kit Komplette karte kit Kit tarjeta completa	981104
25	Kit scheda controllo Kit fiche de controle Control pcb kit Kontrollekarte kit Kit tarjeta de controlo	981105
26	Kit scheda keypad Kit module keypad Keypad pcb kit Keypad steuerungskit Kit tarjeta keypad	981112
27	Condensatore Condensateur Condenser Kondensator Condensator	116857
28	Induttanza Inductance Inductance Drossel Induccion	169907
29	Copri interruttore Couvre interrupteur Switch cover Schalterdeckel Cubre interruptor	122353

Schema elettrico, Schéma électrique, Diagram, Schaltplan, Esquema de conexiones.

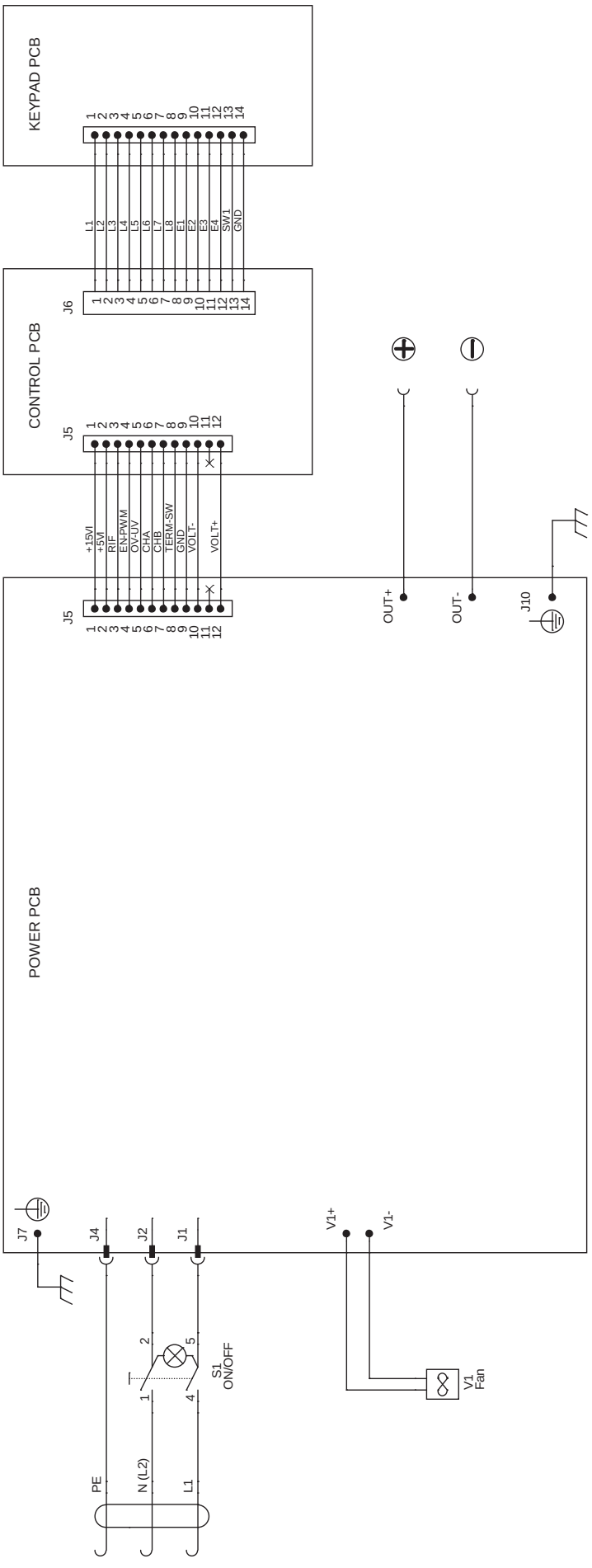

Esploso torcia, Dessin torche, Torch drawing, Schlauchpaket - Explosionszeichnung, Diseño seccionado antorcha.

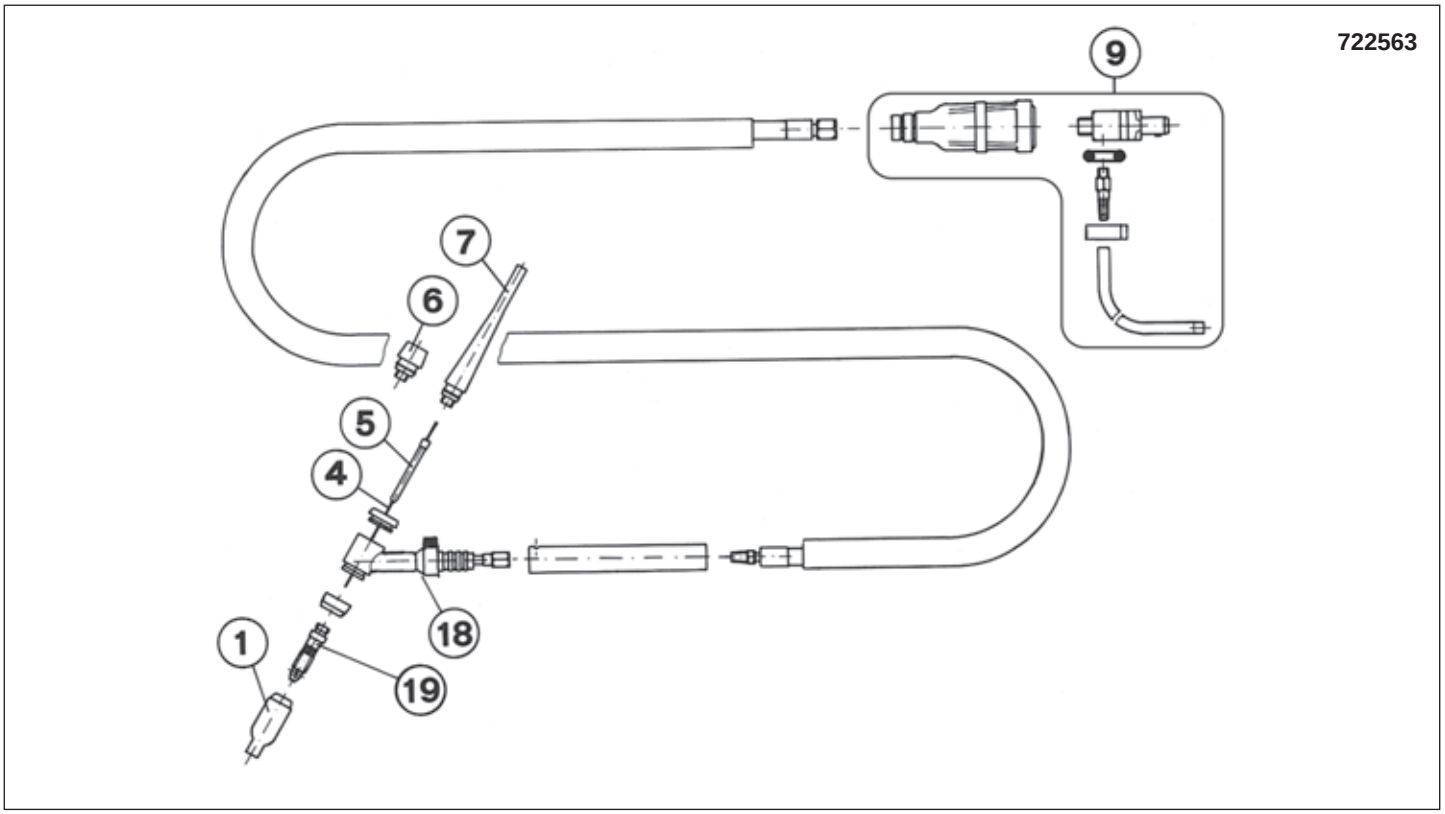

REF.	ELENCO PEZZI RICAMBIO TORCIA LISTE PIECES DETACHEES TORCHE SPARE PARTS LIST TORCH ERSATZTEILLISTE SCLAUCHPAKET PIEZAS DE REPUESTO ANTORCHA	CODICE CODE KODE
1	Kit 10 ugelli ceramici nr.4 - St9 Kit 10 buses ceramiques nr.4 - St9 Kit 10 ceramic nozzles nr.4 - St9 Kit 10 keramikdüsen nr.4 - St9 Kit 10 inyectores ceramicos nr.4 - St9	802229
1	Kit 10 ugelli ceramici nr.5 - St9 Kit 10 buses ceramiques nr.5 - St9 Kit 10 ceramic nozzles nr.5 - St9 Kit 10 keramikdüsen nr.5 - St9 Kit 10 inyectores ceramicos nr.5 - St9	802230
1	Kit 10 ugelli ceramici nr.6 - St9 Kit 10 buses ceramiques nr.6 - St9 Kit 10 ceramic nozzles nr.6 - St9 Kit 10 keramikdüsen nr.6 - St9 Kit 10 inyectores ceramicos nr.6 - St9	802231
4	Kit 10 elettr.Tungsteno ceriato d.1 Mm Kit 10 electr.Tungstene-cerium d.1 Mm Kit 10 cerium-tungsten electr. D.1 Mm Kit 10 wolfram-zerium elektr. D.1 Mm Kit 10 electr.Tungsteno cerio d.1 Mm	802220
4	Kit 10 elettr.Tungsteno ceriato d.1,6 Mm Kit 10 electr.Tungstene-cerium d.1,6 Mm Kit 10 cerium-tungsten electr. D.1,6 Mm Kit 10 wolfram-zerium elektr. D.1,6 Mm Kit 10 electr.Tungsteno cerio d.1,6 Mm	802222
5	Kit 3 pinze serra elettrodo d.1 Mm Kit 3 pinces porte-electrode d.1 Mm Kit 3 electrode holder clamps d.1 Mm Kit 3 elektrodenhalterzangen d.1 Mm Kit 3 pinzas porta electrodo d.1 Mm	802223
5	Kit 3 pinze serra elettrodo d.1,6mm st9v Kit 3 pinces porte-electr. D.1,6 Mm st9v Kit 3 electr. Holder clamps d.1,6mm st9v Kit 3 elektrod.Halterzangen d.1,6mm st9v Kit 3 pinzas porta electr. D.1,6mm st9v	802225
6	Cappuccio corto - st9 Capuchon petit - st9 Short cap - st9 Kurze kappe - st9 Capuchon corto - st9	722982
7	Cappuccio lungo - st9 Capuchon long - st9 Long cap - st9 Lange kappe - st9 Capuchon largo - st9	722981
9	Attacco torcia Attelage torche Torch connection Schlauchpaketanschluss Enganche antorcha	722949
18	Corpo torcia Corps torche Torch body Schlauchpaketteil Cuerpo de antorcha	722947
19	Kit 3 diffusori elettrodo d.1 Mm st9v Kit 3 diffuseurs electrode d.1 Mm st9v Kit 3 electrode diffusers d.1 Mm st9v Kit 3 gasverteiler d.1 Mm st9v Kit 3 difusores electrodo d.1 Mm st9v	802226

REF.	ELENCO PEZZI RICAMBIO TORCIA LISTE PIECES DETACHEES TORCHE SPARE PARTS LIST TORCH ERSATZTEILLISTE SCLAUCHPAKET PIEZAS DE REPUESTO ANTORCHA	CODICE CODE KODE
19	Kit 3 diffusori elettrodo d.1,6 Mm st9v Kit 3 diffuseurs electrode d.1,6 Mm st9v Kit 3 electrode diffusers d.1,6 Mm st9v Kit 3 gasverteiler d.1,6 Mm st9v Kit 3 difusores electrodo d.1,6 Mm st9v	802228

REF.	ELENCO PEZZI RICAMBIO TORCIA LISTE PIECES DETACHEES TORCHE SPARE PARTS LIST TORCH ERSATZTEILLISTE SCLAUCHPAKET PIEZAS DE REPUESTO ANTORCHA	CODICE CODE KODE

ELENCO PEZZI DI RICAMBIO
LISTE PIECES DETACHEES
SPARE PARTS LIST
ERSATZTEILLISTE
PIEZAS DE REPUESTO

ADVANCE 227 XT MV/PFC VRD

Esploso macchina, Dessin appareil, Machine drawing, Explosions Zeichnung des Geräts, Diseño seccionado maquina.



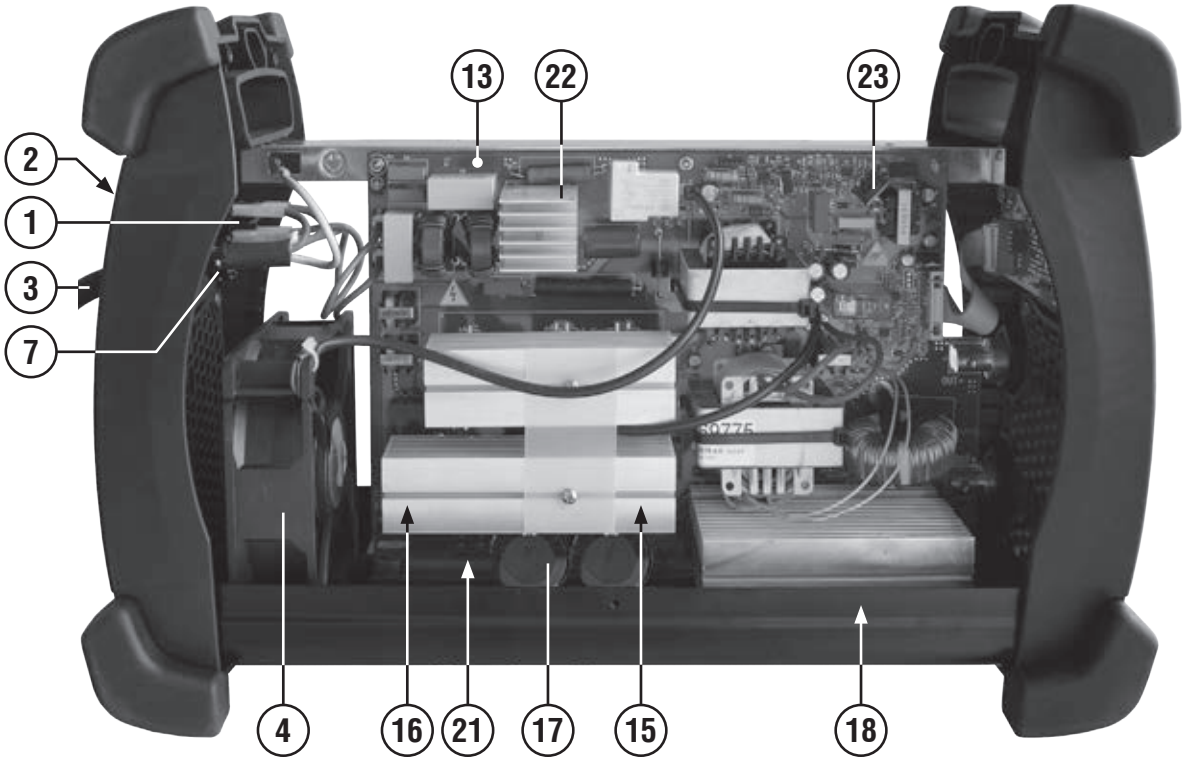

REF.	ELENCO PEZZI DI RICAMBIO PIECES DETACHEES SPARE PARTS LIST ERSATZTEILLISTE PIEZAS DE REPUESTO	CODICE CODE KODE
1	Interruttore Interrupteur Switch Schalter Interruptor	121248
2	Copri interruttore Couvre interrupteur Switch cover Schalterdeckel Cubre interruptor	122353
3	Cavo alim. H07rn-f 3g02.50 L=02.30 Cable alim. H07nn-f 3g02.50 L=02.30 Mains cable h07rn-f 3g02.50 L=02.30 Netzkabel h07rn-f 3g02.50 L=02.30 Cable alim. H07rn-f 3g02.50 L=02.30	132389
4	Ventilatore Ventilateur Fan Ventilator Ventilador	152323
7	Kit pressacavo + ghiera Kit presse cable + embout Kit cable bushing + ring nut Kit kabelhalter + nutmutter Kit prensa cable + virola	990046
8	Manico Poignee Handle Handgriff Manija	635011
9	Kit prese atlas 50mmq Kit prises atlas 50mmq Atlas sockets kit 50mmq Atlas steckdose kit 50mmq Kit enchufes atlas 50mmq	981878
10	Kit manopola encoder d.29 Kit poignee encoder d.29 Encoder knob kit d.29 Encodergriff kit d.29 Kit manija encoder d.29	982070
11	Kit mantello Kit capot Cover kit Deckel kit Kit panel de cobertura	982148
12	Kit fondo Kit chassis Bottom kit Bodenteil kit Kit fondo	982149
13	Kit scheda potenza + scheda pannello Kit platine puissance + platine frontal Power board + front panel board kit Leistungskarte- + gerätefrontskarte-kit Kit tarjeta potencia + tarjeta frontal	982390
15	Kit igbt Kit igbt Kit igbt Kit igbt Kit igbt	982153

REF.	ELENCO PEZZI DI RICAMBIO PIECES DETACHEES SPARE PARTS LIST ERSATZTEILLISTE PIEZAS DE REPUESTO	CODICE CODE KODE
16	Kit igbt + diodi Kit igbt + diodes Kit igbt + diodes Kit igbt + dioden Kit igbt + diodos	982154
17	Kit condensatori Kit condensateurs Condenser kit Kondensator kit Kit condensatores	982155
18	Kit diodi Kit diodes Diodes kit Dioden kit Kit diodos	982156
19	Retro bumpers Partie arriere bumpers Bumpers back panel Bumpers rückseite Trasera bumpers	323107
20	Frontale bumpers Partie frontal bumpers Bumpers front panel Bumpers gerätefront Frontal bumpers	323114
21	Kit scheda controllo Kit fiche de controle Control pcb kit Kontrollekarte kit Kit tarjeta de controlo	981230
22	Kit ponte monofase Kit pont monophase Single phase bridge kit Einfasige brücke kit Kit puente monofasico	981581
23	Kit mosfet flyback Kit mosfet flyback Mosfet flyback kit Mosfet flyback kit Kit mosfet flyback	981585

REF.	ELENCO PEZZI DI RICAMBIO PIECES DETACHEES SPARE PARTS LIST ERSATZTEILLISTE PIEZAS DE REPUESTO	CODICE CODE KODE

Schema elettrico, Schéma électrique, Diagram, Schaltplan, Esquema de conexiones.

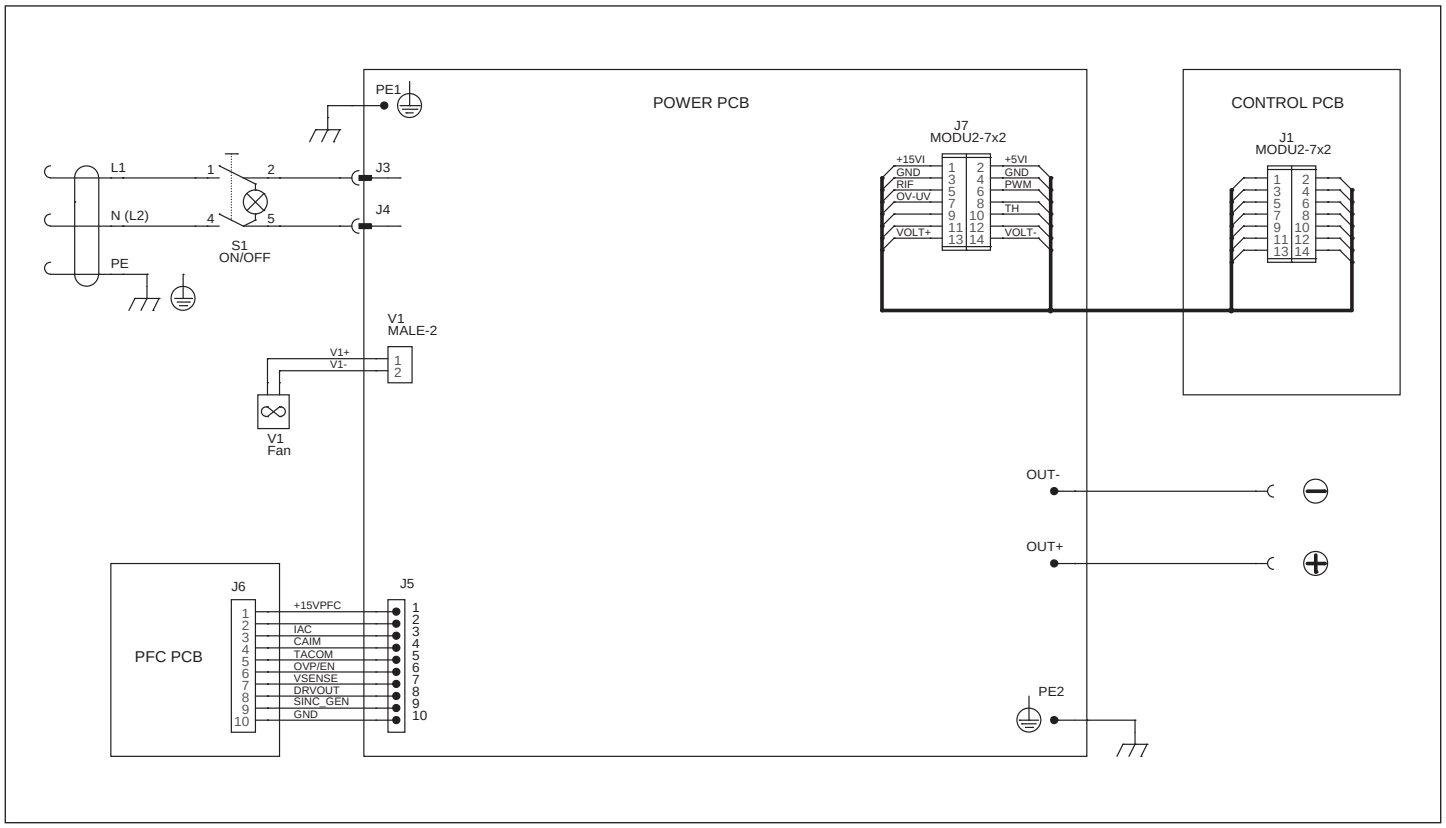

ELENCO PEZZI DI RICAMBIO
LISTE PIECES DETACHEES
SPARE PARTS LIST
ERSATZTEILLISTE
PIEZAS DE REPUESTO

TECHNOLOGY TIG 230 DC-HF/LIFT VRD

Esploso macchina, Dessin appareil, Machine drawing, Explosions Zeichnung des Geräts, Diseño seccionado maquina.



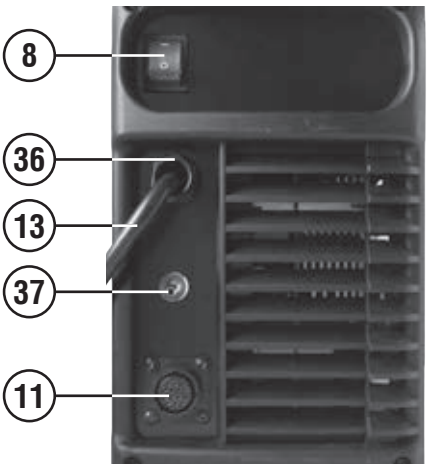

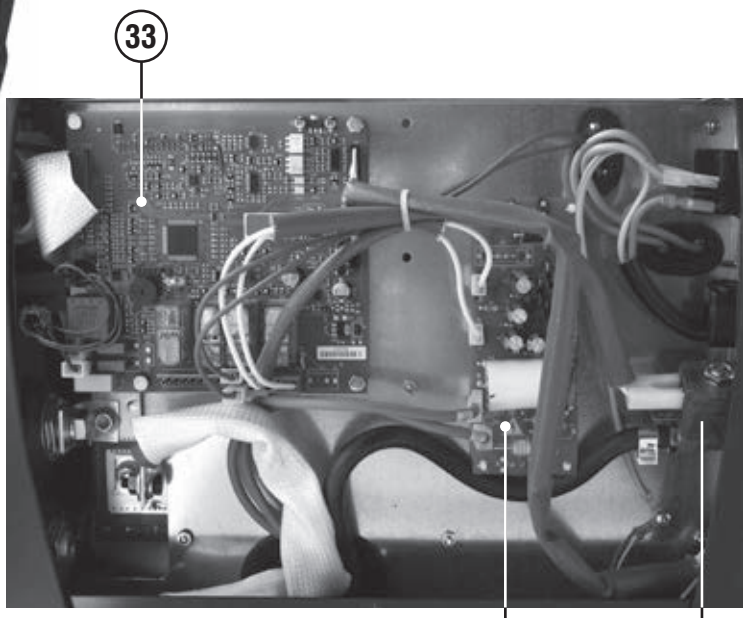

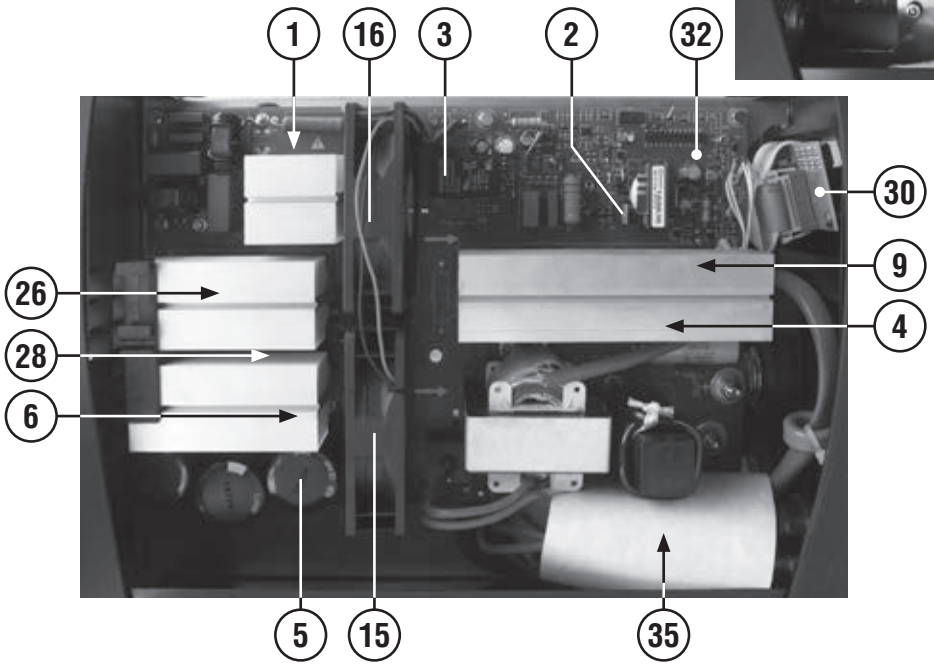

REF.	ELENCO PEZZI DI RICAMBIO PIECES DETACHEES SPARE PARTS LIST ERSATZTEILLISTE PIEZAS DE REPUESTO	CODICE CODE KODE
1	Ponte monofase Pont monophase Single phase bridge Einfasige brücke Puente monofasico	111017
2	Mosfet Mosfet Mosfet Mosfet Mosfet	111209
3	Rele' Relais Relais Relais Conectador	111252
4	Diodo Diode Diode Diode Diodo	112948
5	Condensatore Condensateur Capacitor Kondensator Condensador	113122
6	Soppressore 1.5smc540a 540v 6.5wdo214ab Soppresseur tension 1.5smc540a 540v 6.5w Suppressor 1.5smc540a 540v 6.5wdo214ab Spannungssoppressor 1.5smc540a 540v 6.5w Sopresor tension 1.5smc540a 540v 6.5wdo2	116788
7	Elettrovalvola Electrovanne Electrovalve Elektroventil Electrovalvula	121800
8	Interruttore Interrupteur Switch Schalter Interruptor	121248
9	Termostato Thermostat Thermostat Thermostat Termostato	121546
10	Manopola per potenziometro Poignee pour potentiometre Potentiometer knob Potentiometergriff Manija por potenciometro	121547
11	Cablaggio controllo/c.A.D. Cable de controle/c.A.D. Control cable/c.A.D. Kontrolkabel/c.A.D. Cable de control/c.A.D.	124105
12	Cablaggio pulsante torcia Cable poussoir torche Torch button cable Brennerknopfskabel Cable pulsador antorcha	124766
13	Cavo alim. H05vv-f 3g02.50 L=02.50 Cable alim. H05vv-f 3g02.50 L=02.50 Mains cable h05vv-f 3g02.50 L=02.50 Netzkabel h05vv-f 3g02.50 L=02.50 Cable alim. H05vv-f 3g02.50 L=02.50	132381
15	Ventilatore Ventilateur Fan Ventilator Ventilador	152269
16	Ventilatore Ventilateur Fan Ventilator Ventilador	152904
21	Frontale Partie frontal Front panel Geraetefront Frontal	321126
22	Retro Partie arriere Back panel Rueckseite Trasera	321127
23	Manico Poignee Handle Handgriff Manija	321128
24	Presa atlas 50mmq Prise atlas 50mmq Atlas socket 50mmq Atlas steckdose 50mmq Enchufe atlas 50mmq	712036
25	Kit raccordo entrata gas Kit raccord entree gaz Gas pipe connector kit Gaseintrittkit Kit racor entrada gas	980548
26	Kit igbt + diodo Kit igbt + diode Igbt + diode kit Igbt + diode kit Kit igbt + diodo	980990
27	Kit scheda hf Kit fiche hf Hf board kit Hf karte kit Kit tarjeta hf	981179
28	Kit trasformatore impulsi Kit transformateur d'impulsions Impulse transformer kit Impuls-transformator kit Kit transformador de impulsos	981372
29	Kit scheda keypad Kit module keypad Pcb kit keypad Steuerungskit keypad Kit tarjeta keypad	981436
30	Kit scheda pannello Kit platine frontal Kit front panel card Kit geraetefrontskarte Kit tarjeta frontal	981535
31	Kit mantello Kit capot Cover kit Deckelkit Kit panel de cobertura	981722
32	Kit scheda potenza Kit platine puissance Power board kit Leistungskartekit Kit tarjeta de potencia	981723
33	Kit scheda controllo Kit carte controle Control board kit Steuerungskarte kit Kit tarjeta control	981724
34	Kit fondo Kit chassis Bottom kit Bodenteil kit Kit fondo	981725
35	Kit trasformatore hf Kit transformateur hf Hf transformer kit Hf transformator kit Kit transformador hf	981726
36	Kit pressacavo + ghiera Kit presse cable + embout Kit cable bushing + ring nut Kit kabelhalter + nutmutter Kit prensa cable + virola	990046
37	Raccordo Raccord Pipe fitting Anschluss Empalme	602376

Schema elettrico, Schéma électrique, Diagram, Schaltplan, Esquema de conexiones.

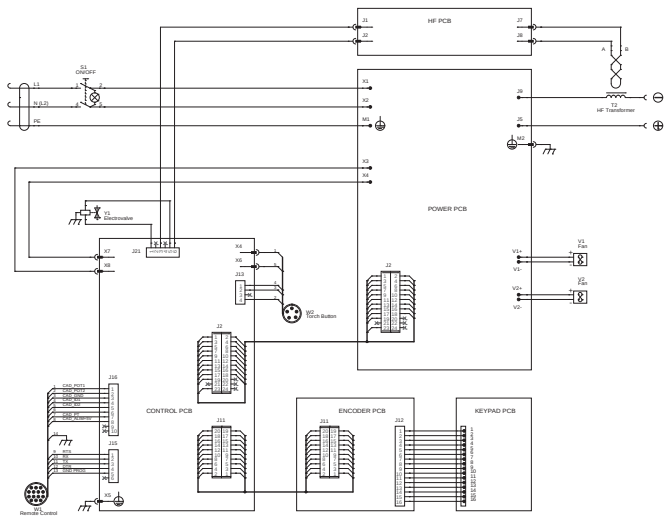

ELENCO PEZZI DI RICAMBIO
LISTE PIECES DETACHEES
SPARE PARTS LIST
ERSATZTEILLISTE
PIEZAS DE REPUESTO

TECHNOLOGY TIG 182 AC/DC-HF/LIFT

TELWIN®

Esploso macchina, Dessin appareil, Machine drawing, Explosions Zeichnung des Geräts, Diseño seccionado maquina.

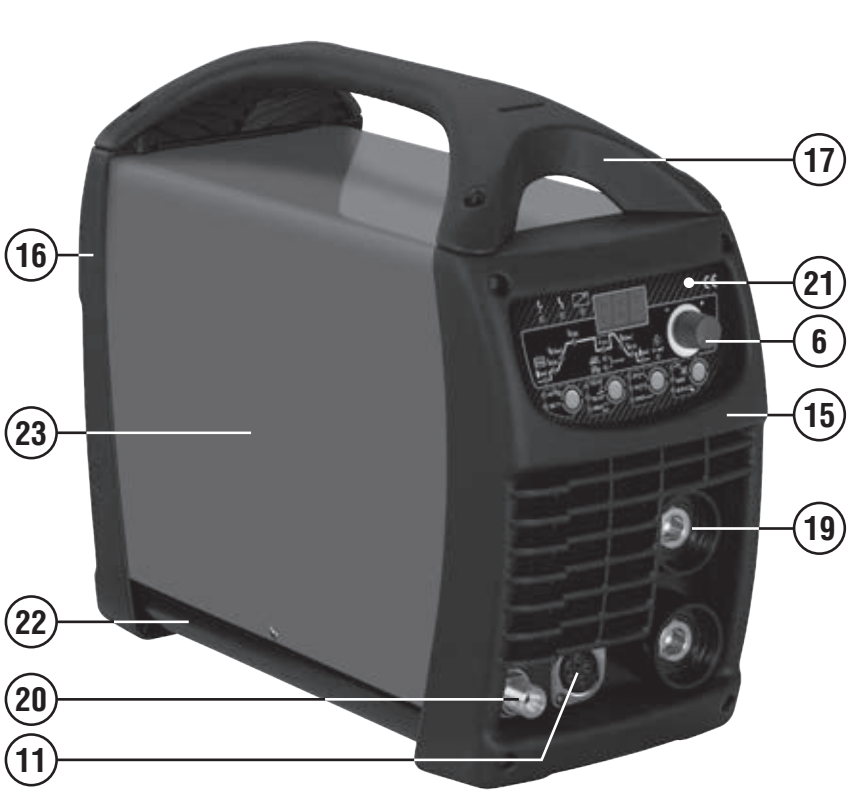

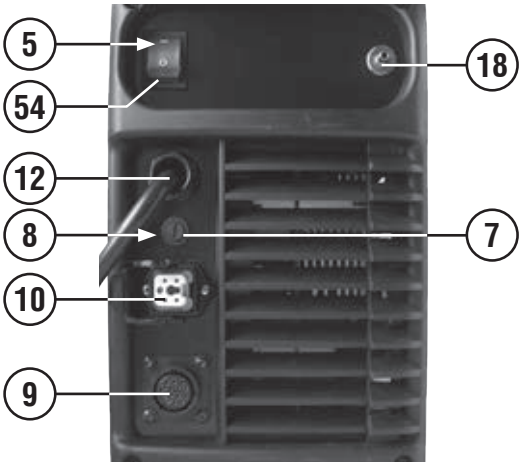

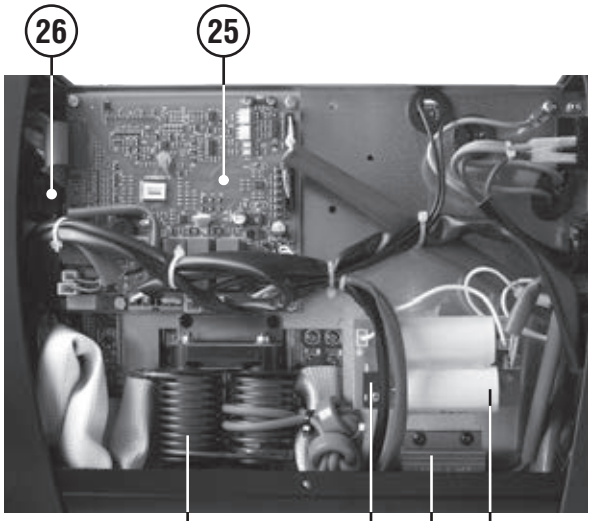

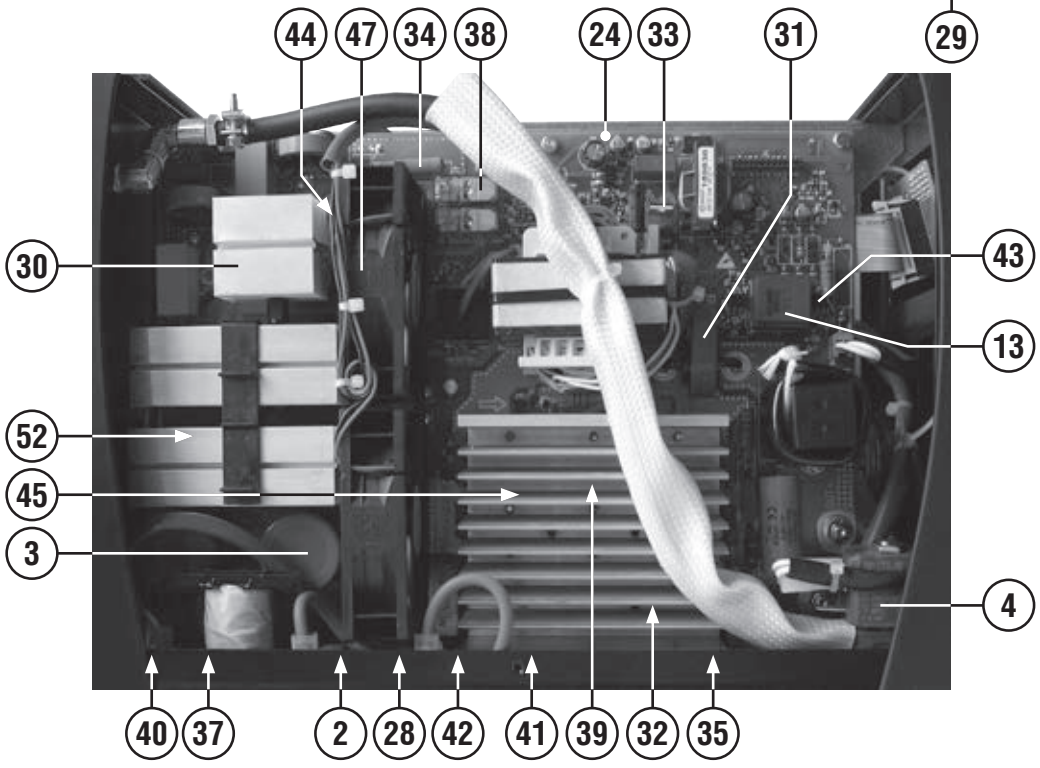

REF.	ELENCO PEZZI DI RICAMBIO PIECES DETACHEES SPARE PARTS LIST ERSATZTEILLISTE PIEZAS DE REPUESTO	CODICE CODE KODE
2	Scaricatore a gas 600v Dechargeur de gaz 600v Gas discharger 600v Gas entladung 600v Descargador de gas 600v	111275
3	Condensatore Condensateur Capacitor Kondensator Condensador	112694
4	Elettrovalvola Electrovanne Electrovalve Elektroventil Electrovalvula	121800
5	Interruttore Interrupteur Switch Schalter Interruptor	121248
6	Manopola per potenziometro Poignee pour potentiometre Potentiometer knob Potentiometergriff Manija por potenciometro	121547
7	Portafusibile Porte fusible Fuse holder Sicherungshalter Porta fusible	122159
8	Fusibile 1a Fusible 1a Fuse 1a Sicherung 1a Fusible 1a	122433
9	Cablaggio controllo/c.A.D. Cable de controle/c.A.D. Control cable/c.A.D. Kontrolkabel/c.A.D. Cable de control/c.A.D.	124105
10	Cablaggio g.R.A. Cable g.R.A. G.R.A. Cable G.R.A. Kabel Cable g.R.A.	124657
11	Cablaggio pulsante torcia Cable poussoir torche Torch button cable Brennerknopfskabel Cable pulsador antorcha	124766
12	Cavo alim. H05vv-f 3g02.50 L=02.50 Cable alim. H05vv-f 3g02.50 L=02.50 Mains cable h05vv-f 3g02.50 L=02.50 Netzkabel h05vv-f 3g02.50 L=02.50 Cable alim. H05vv-f 3g02.50 L=02.50	132381
13	Kit trasformatore impulsi Kit transformateur d'impulsions Impulse transformer kit Impuls-transformator kit Kit transformador de impulsos	981372
15	Frontale Partie frontal Front panel Geraetefront Frontal	321126
16	Retro Partie arriere Back panel Rueckseite Trasera	321127
17	Manico Poignee Handle Handgriff Manija	321128
18	Raccordo Raccord Pipe fitting Anschluss Empalme	602376
19	Presa atlas 50mmq Prise atlas 50mmq Atlas socket 50mmq Atlas steckdose 50mmq Enchufe atlas 50mmq	712036
20	Kit raccordo entrata gas Kit raccord entree gaz Gas pipe connector kit Gaseintrittkit Kit racor entrada gas	980548
21	Kit scheda keypad Kit module keypad Keypad card kit Keypad steuerungskit Kit tarjeta keypad	981406
22	Kit fondo Kit chassis Bottom kit Bodenteil kit Kit fondo	981438
23	Kit mantello Kit capot Cover kit Deckel kit Kit panel de cobertura	982551
24	Kit scheda potenza Kit platine de puissance Power module kit Leistungskarte kit Kit placa de potencia	981533
25	Kit scheda controllo Kit fiche de controle Control pcb kit Kontrollekarte kit Kit tarjeta de controlo	981534
26	Kit scheda pannello Kit platine frontal Kit front panel card Kit geraetefrontskarte Kit tarjeta frontal	981535
27	Kit scheda supporto tig Kit platine support tig Tig support control pcb kit Wig lager steurungskarte kit Kit tarjeta soporte tig	981536
28	Kit scheda generatore h.F. Kit platine generateur h.F. H.F. Generator card kit H.F. Generatorskarte kit Kit tarjeta generador h.F.	981537
29	Kit trasformatore hf Kit transformateur hf Hf transformer kit Hf transformator kit Kit transformador hf	981538
30	Ponte monofase Pont monophase Single phase bridge Einfasige brücke Puente monofasico	111017
31	Sensore hall Capteur hall Sensor hall Messfühler hall Sensor hall	111191
32	Igbt Igbt Igbt Igbt Igbt	111193
33	Mosfet Mosfet Mosfet Mosfet Mosfet	111209
34	Res. Filo 47r 8w 5% Res. Fil 47r 8w 5% Res. Wire 47r 8w 5% Res. Draht 47r 8w 5% Res. Hilo 47r 8w 5%	112048
35	Resistenza Resistance Resistance Wiederstand Resistencia	112536
36	Diodo Diode Diode Diode Diodo	112689
37	Diodo by228 3a 1500v Diode by228 3a 1500v Diode by228 3a 1500v Diode by228 3a 1500v Diodo by228 3a 1500v	113072
38	Rele' Relais Relais Relais Relais	113493
39	Diodo Diode Diode Diode Diodo	113747
40	Diodo Diode Diode Diode Diodo	116694
41	Resistenza Resistance Resistance Widerstand Resistencia	116443
42	Diodo 15a 600v 35ns to220ac Diode 15a 600v 35ns to220ac Diode 15a 600v 35ns to220ac Diode 15a 600v 35ns to220ac Diodo 15a 600v 35ns to220ac	116570
43	Opto-accoppiatore Opto-accoupler Opto-coupler Opto-koppler Opto-acoplador	116620
44	Res. Met. 10r 2w 5% fuse Res. Met. 10r 2w 5% fuse Res. Met. 10r 2w 5% fuse Res. Met. 10r 2w 5% fuse Res. Met. 10r 2w 5% fuse	116962
45	Termostato Thermostat Thermal switch Thermostat Termostato	121261
47	Ventilatore Ventilateur Fan Ventilator Ventilador	152269
52	Kit igbt + diodo Kit igbt + diode Igbt + diode kit Igbt + diode kit Kit igbt + diodo	980990
53	Cablaggio resistenza Calbe resistance Resistance cable Widerstandskabel Cable resistencia	124041
54	Copri interruttore Couvre interrupteur Switch cover Schalterdeckel Cubre interruptor	122353

Schema elettrico, Schéma électrique, Diagram, Schaltplan, Esquema de conexiones.

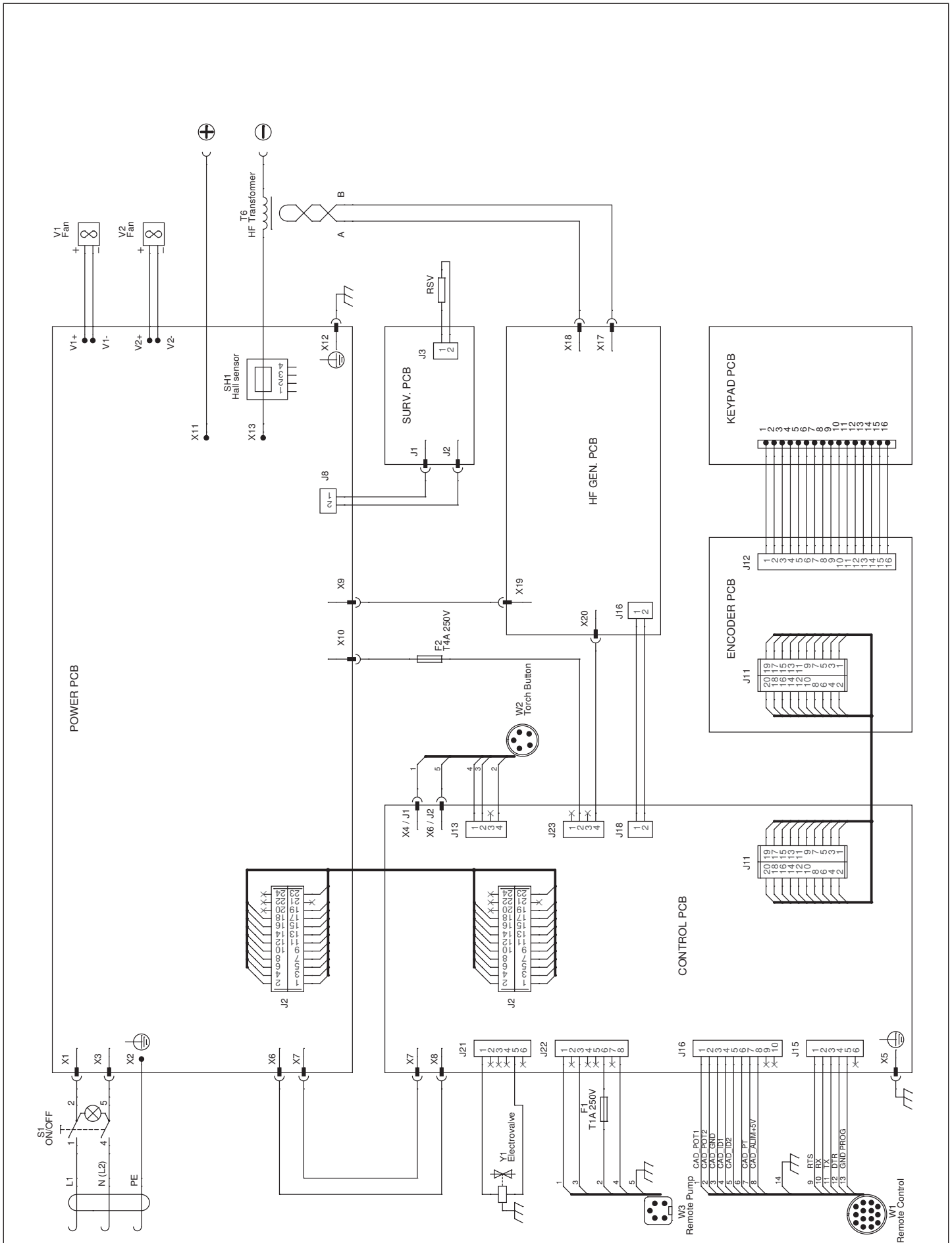

Esploso torcia, Dessin torche, Torch drawing, Schlauchpaket - Explosionszeichnung, Diseño seccionado antorcha.

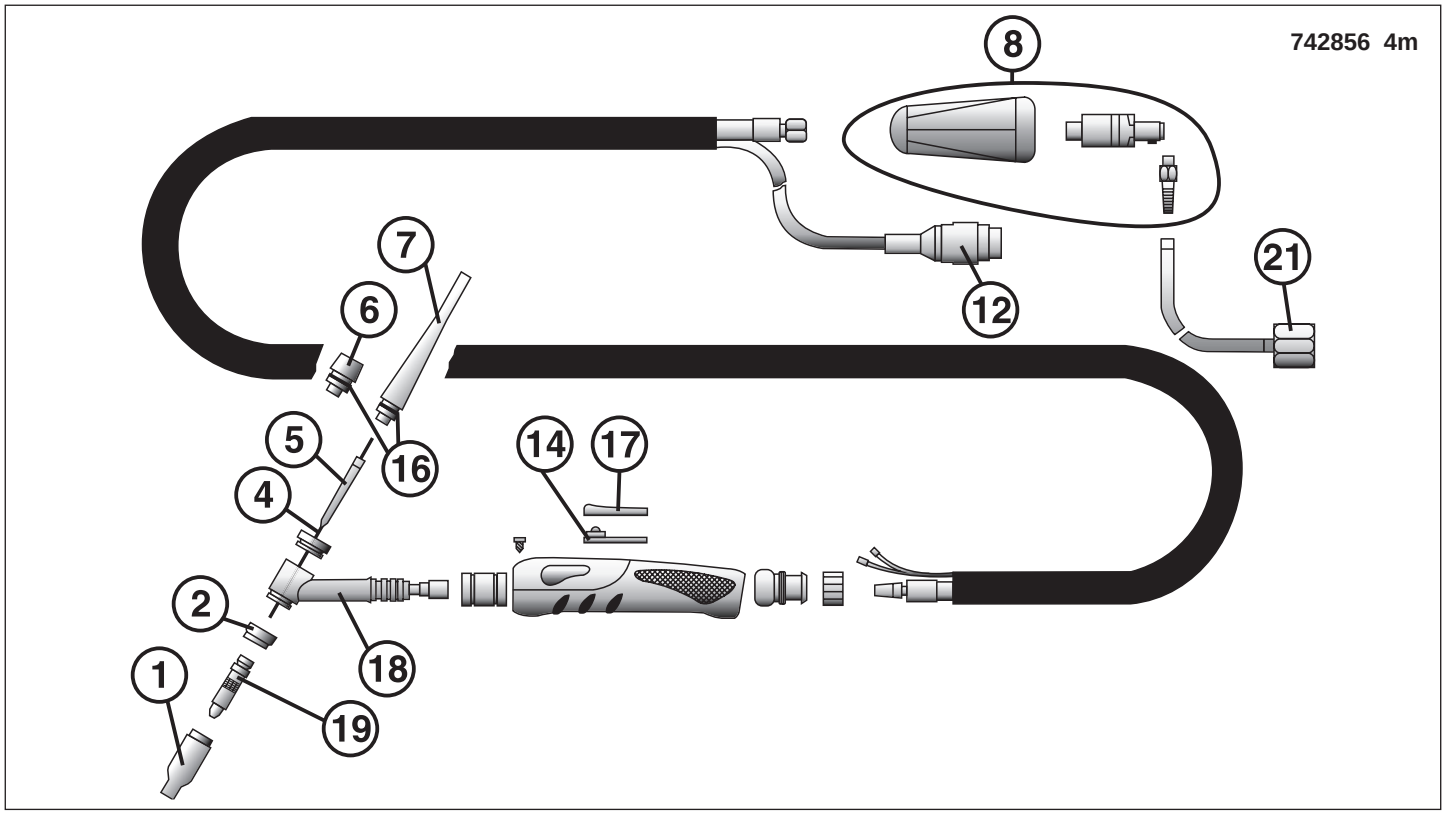

REF.	ELENCO PEZZI RICAMBIO TORCIA LISTE PIECES DETACHEES TORCHE SPARE PARTS LIST TORCH ERSATZTEILLISTE SCLAUCHPAKET PIEZAS DE REPUESTO ANTORCHA	CODICE CODE KODE
1	Kit 10 ugelli ceramici nr.7 Sr17-26 Kit 10 buses ceramiques nr.7 Sr17-26 Kit 10 ceramic nozzles nr.7 Sr17-26 Kit 10 keramikdüsen nr.7 Sr17-26 Kit 10 inyectores ceramicos nr.7 Sr17-26	802246
1	Kit 10 ugelli ceramici nr.6 Sr17-26 Kit 10 buses ceramiques nr.6 Sr17-26 Kit 10 ceramic nozzles nr.6 Sr17-26 Kit 10 keramikdüsen nr.6 Sr17-26 Kit 10 inyectores ceramicos nr.6 Sr17-26	802245
1	Kit 10 ugelli ceramici nr.4 Sr17-26 Kit 10 buses ceramiques nr.4 Sr17-26 Kit 10 ceramic nozzles nr.4 Sr17-26 Kit 10 keramikdüsen nr.4 Sr17-26 Kit 10 inyectores ceramicos nr.4 Sr17-26	802244
2	Isolante Isolant Insulator Isolator Aislador	722248
4	Kit 10 elettr.Tungsteno ceriato d.2,4 Mm Kit 10 electr.Tungstene-cerium d.2,4 Mm Kit 10 cerium-tungsten electr. D.2,4 Mm Kit 10 wolfram-zerium elektr. D.2,4 Mm Kit 10 electr.Tungsteno cerio d.2,4 Mm	802232
4	Kit 10 elettr.Tungsteno ceriato d.1,6 Mm Kit 10 electr.Tungstene-cerium d.1,6 Mm Kit 10 cerium-tungsten electr. D.1,6 Mm Kit 10 wolfram-zerium elektr. D.1,6 Mm Kit 10 electr.Tungsteno cerio d.1,6 Mm	802222
4	Kit 10 elettr.Tungsteno ceriato d.1 Mm Kit 10 electr.Tungstene-cerium d.1 Mm Kit 10 cerium-tungsten electr. D.1 Mm Kit 10 wolfram-zerium elektr. D.1 Mm Kit 10 electr.Tungsteno cerio d.1 Mm	802220
5	Kit 3 pinze serra elettrodo d.1,0 Mm Kit 3 pinces porte-electrode d.1,0 Mm Kit 3 electrode holder clamps d.1,0 Mm Kit 3 elektrodenhalterzangen d.1,0 Mm Kit 3 pinzas porta electrodo d.1,0 Mm	802239
5	Kit 3 pinze serra elettrodo d.1,6 Mm Kit 3 pinces porte-electrode d.1,6 Mm Kit 3 electrode holder clamps d.1,6 Mm Kit 3 elektrodenhalterzangen d.1,6 Mm Kit 3 pinzas porta electrodo d.1,6 Mm	802240
5	Kit 3 pinze serra elettrodo d.2,4 Mm Kit 3 pinces porte-electrode d.2,4 Mm Kit 3 electrode holder clamps d.2,4 Mm Kit 3 elektrodenhalterzangen d.2,4 Mm Kit 3 pinzas porta electrodo d.2,4 Mm	802241
6	Cappuccio corto st17-26 Capuchon petit st17-26 Short cap st17-26 Kurze kappe st17-26 Capuchon corto st17-26	722192
7	Cappuccio lungo st17-26 Capuchon long st17-26 Long cap st17-26 Lange kappe st17-26 Capuchon largo st17-26	722193

REF.	ELENCO PEZZI RICAMBIO TORCIA LISTE PIECES DETACHEES TORCHE SPARE PARTS LIST TORCH ERSATZTEILLISTE SCLAUCHPAKET PIEZAS DE REPUESTO ANTORCHA	CODICE CODE KODE
8	Kit attacco atlas 50mmq Kit embout atlas 50mmq Atlas 50mmq connection kit Atlas 50mmq anschluss kit Kit conexion atlas 50mmq	981443
12	Spina 5p Fiche 5p 5p plug 5p stecker Espina 5p	742599
14	Contatto pulsante Contact poussoir Pushbotton contact Druckknopfkontakt Contacto pulsador	452089
16	Anello or Bague or Or ring Or ring Anillo or	722061
17	Pulsante Poussoir Pushbotton Druckknopf Pulsador	742042
18	Corpo torcia Corps torche Torch body Schlauchpaketteil Cuerpo de antorcha	722204
19	Kit 3 diffusori elettrodo d.1 Mm Kit 3 diffuseurs electrode d.1 Mm Kit 3 electrode diffusers d.1 Mm Kit 3 gasverteiler d.1 Mm Kit 3 difusores electrodo d.1 Mm	802249
19	Kit 3 diffusori elettrodo d.1,6 Mm Kit 3 diffuseurs electrode d.1,6 Mm Kit 3 electrode diffusers d.1,6 Mm Kit 3 gasverteiler d.1,6 Mm Kit 3 difusores electrodo d.1,6 Mm	802250
19	Kit 3 diffusori elettrodo d.2,4 Mm Kit 3 diffuseurs electrode d.2,4 Mm Kit 3 electrode diffusers d.2,4 Mm Kit 3 gasverteiler d.2,4 Mm Kit 3 difusores electrodo d.2,4 Mm	802251
21	"Kit raccordo 3/8"" torcia tig" "Kit raccord 3/8"" torcia tig" "3/8"" Connection kit tig torch" "3/8"" Gaskupplungkit wig brenner" "Kit enchufe gas 3/8"" torca tig"	990263

REF.	ELENCO PEZZI RICAMBIO TORCIA LISTE PIECES DETACHEES TORCHE SPARE PARTS LIST TORCH ERSATZTEILLISTE SCLAUCHPAKET PIEZAS DE REPUESTO ANTORCHA	CODICE CODE KODE

ELENCO PEZZI DI RICAMBIO
LISTE PIECES DETACHEES
SPARE PARTS LIST
ERSATZTEILLISTE
PIEZAS DE REPUESTO

TECHNOLOGY TIG 222 AC/DC HF/LIFT VRD

Esploso macchina, Dessin appareil, Machine drawing, Explosions Zeichnung des Geräts, Diseño seccionado maquina.



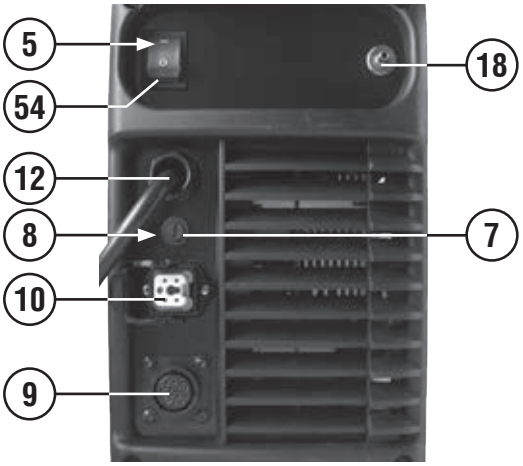

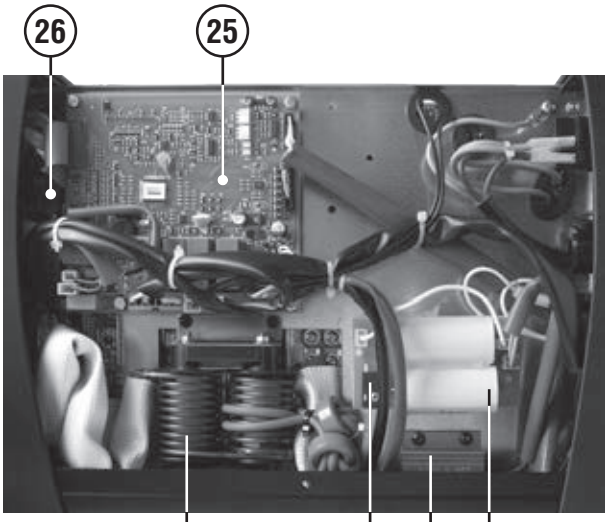

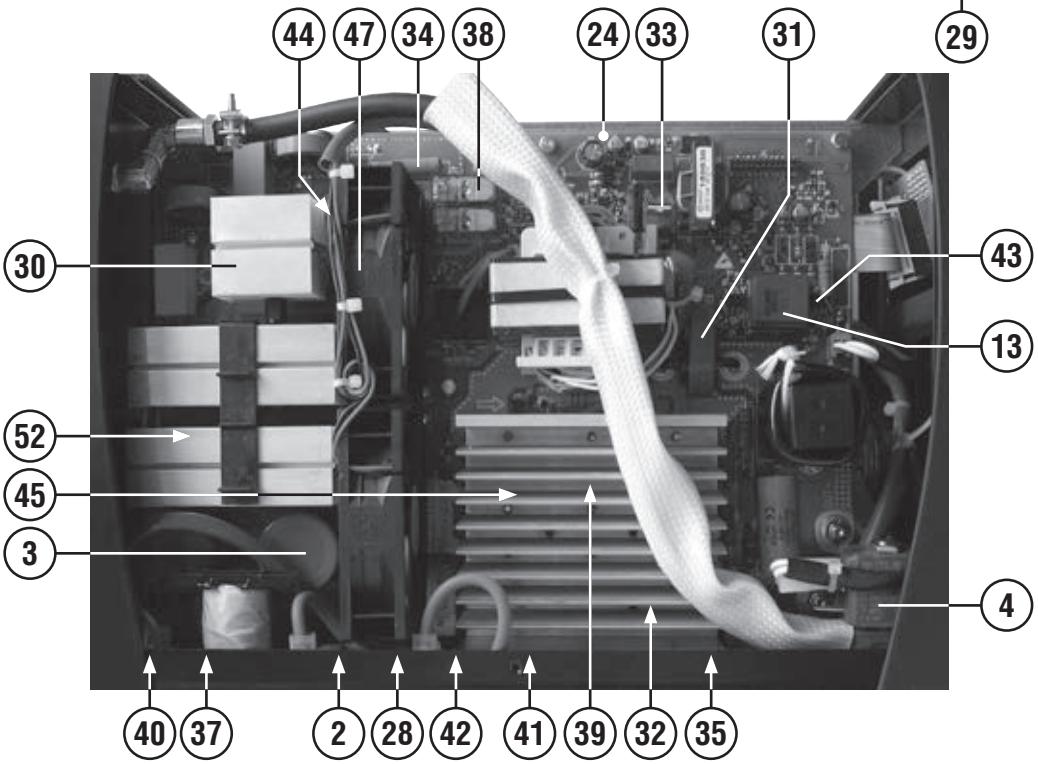

REF.	ELENCO PEZZI DI RICAMBIO PIECES DETACHEES SPARE PARTS LIST ERSATZTEILLISTE PIEZAS DE REPUESTO	CODICE CODE KODE
2	Scaricatore a gas 600v Dechargeur de gaz 600v Gas discharger 600v Gas entladung 600v Descargador de gas 600v	111275
3	Condensatore Condensateur Capacitor Kondensator Condensador	112694
4	Elettrovalvola Electrovanne Electrovalve Elektroventil Electrovalvula	121800
5	Interruttore Interrupteur Switch Schalter Interruptor	121248
6	Manopola per potenziometro Poignee pour potentiometre Potentiometer knob Potentiometergriff Manija por potenciometro	121547
7	Portafusibile Porte fusible Fuse holder Sicherungshalter Porta fusible	122159
8	Fusibile 1a Fusible 1a Fuse 1a Sicherung 1a Fusible 1a	122433
9	Cablaggio controllo/c.A.D. Cable de controle/c.A.D. Control cable/c.A.D. Kontrolkabel/c.A.D. Cable de control/c.A.D.	124105
10	Cablaggio g.R.A. Cable g.R.A. G.R.A. Cable G.R.A. Kabel Cable g.R.A.	124657
11	Cablaggio pulsante torcia Cable poussoir torche Torch button cable Brennerknopfskabel Cable pulsador antorcha	124766
12	Cavo alim. H05vv-f 3g02.50 L=02.50 Cable alim. H05vv-f 3g02.50 L=02.50 Mains cable h05vv-f 3g02.50 L=02.50 Netzkabel h05vv-f 3g02.50 L=02.50 Cable alim. H05vv-f 3g02.50 L=02.50	132381
13	Kit trasformatore impulsi Kit transformateur d'impulsions Impulse transformer kit Impuls-transformator kit Kit transformador de impulsos	981372
15	Frontale Partie frontal Front panel Geraetefront Frontal	321126
16	Retro Partie arriere Back panel Rueckseite Trasera	321127
17	Manico Poignee Handle Handgriff Manija	321128
18	Raccordo Raccord Pipe fitting Anschluss Empalme	602376
19	Presa atlas 50mmq Prise atlas 50mmq Atlas socket 50mmq Atlas steckdose 50mmq Enchufe atlas 50mmq	712036
20	Kit raccordo entrata gas Kit raccord entree gaz Gas pipe connector kit Gaseintrittkit Kit racor entrada gas	980548
21	Kit scheda keypad Kit module keypad Keypad card kit Keypad steuerungskit Kit tarjeta keypad	981406
22	Kit fondo Kit chassis Bottom kit Bodenteil kit Kit fondo	981438
23	Kit mantello Kit capot Cover kit Deckelkit Kit panel de cobertura	981532
24	Kit scheda potenza Kit platine de puissance Power module kit Leistungskarte kit Kit placa de potencia	981533
25	Kit scheda controllo Kit fiche de controle Control pcb kit Kontrollekarte kit Kit tarjeta de controlo	981534
26	Kit scheda pannello Kit platine frontal Kit front panel card Kit geraetefrontskarte Kit tarjeta frontal	981535
27	Kit scheda supporto tig Kit platine support tig Tig support control pcb kit Wig lager steurungskarte kit Kit tarjeta soporte tig	981536
28	Kit scheda generatore h.F. Kit platine generateur h.F. H.F. Generator card kit H.F. Generatorskarte kit Kit tarjeta generador h.F.	981537
29	Kit trasformatore hf Kit transformateur hf Hf transformer kit Hf transformator kit Kit transformador hf	981538
30	Ponte monofase Pont monophase Single phase bridge Einfasige brücke Puente monofasico	111017
31	Sensore hall Capteur hall Sensor hall Messfühler hall Sensor hall	111191
32	Igbt Igbt Igbt Igbt Igbt	111193
33	Mosfet Mosfet Mosfet Mosfet Mosfet	111209
34	Res. Filo 47r 8w 5% Res. Fil 47r 8w 5% Res. Wire 47r 8w 5% Res. Draht 47r 8w 5% Res. Hilo 47r 8w 5%	112048
35	Resistenza Resistance Resistance Wiederstand Resistencia	112536
36	Diodo Diode Diode Diode Diodo	112689
37	Diodo by228 3a 1500v Diode by228 3a 1500v Diode by228 3a 1500v Diode by228 3a 1500v Diodo by228 3a 1500v	113072
38	Rele' Relais Relais Relais Relais	113493
39	Diodo Diode Diode Diode Diodo	113747
40	Diodo Diode Diode Diode Diodo	116694
41	Resistenza Resistance Resistance Widerstand Resistencia	116443
42	Diodo 15a 600v 35ns to220ac Diode 15a 600v 35ns to220ac Diode 15a 600v 35ns to220ac Diode 15a 600v 35ns to220ac Diodo 15a 600v 35ns to220ac	116570
43	Opto-accoppiatore Opto-accoupler Opto-coupler Opto-koppler Opto-acoplador	116620
44	Res. Met. 10r 2w 5% fuse Res. Met. 10r 2w 5% fuse Res. Met. 10r 2w 5% fuse Res. Met. 10r 2w 5% fuse Res. Met. 10r 2w 5% fuse	116962
45	Termostato Thermostat Thermal switch Thermostat Termostato	121261
47	Ventilatore Ventilateur Fan Ventilator Ventilador	152269
52	Kit igbt + diodo Kit igbt + diode Igbt + diode kit Igbt + diode kit Kit igbt + diodo	980990
53	Cablaggio resistenza Calbe resistance Resistance cable Widerstandskabel Cable resistencia	124041
54	Copri interruttore Couvre interrupteur Switch cover Schalterdeckel Cubre interruptor	122353

Schema elettrico, Schéma électrique, Diagram, Schaltplan, Esquema de conexiones.

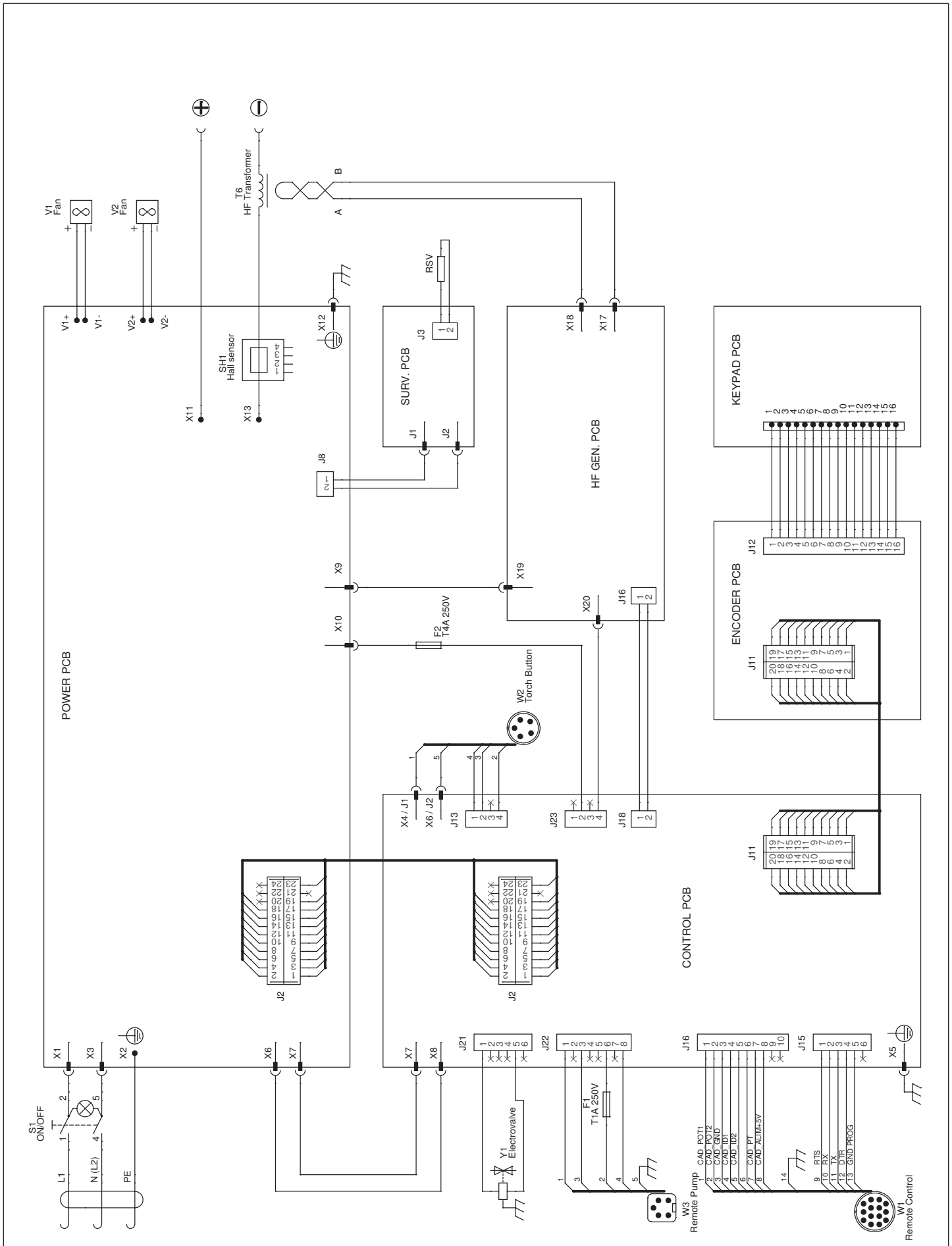

Esploso torcia, Dessin torche, Torch drawing, Schlauchpaket - Explosionszeichnung, Diseño seccionado antorcha.

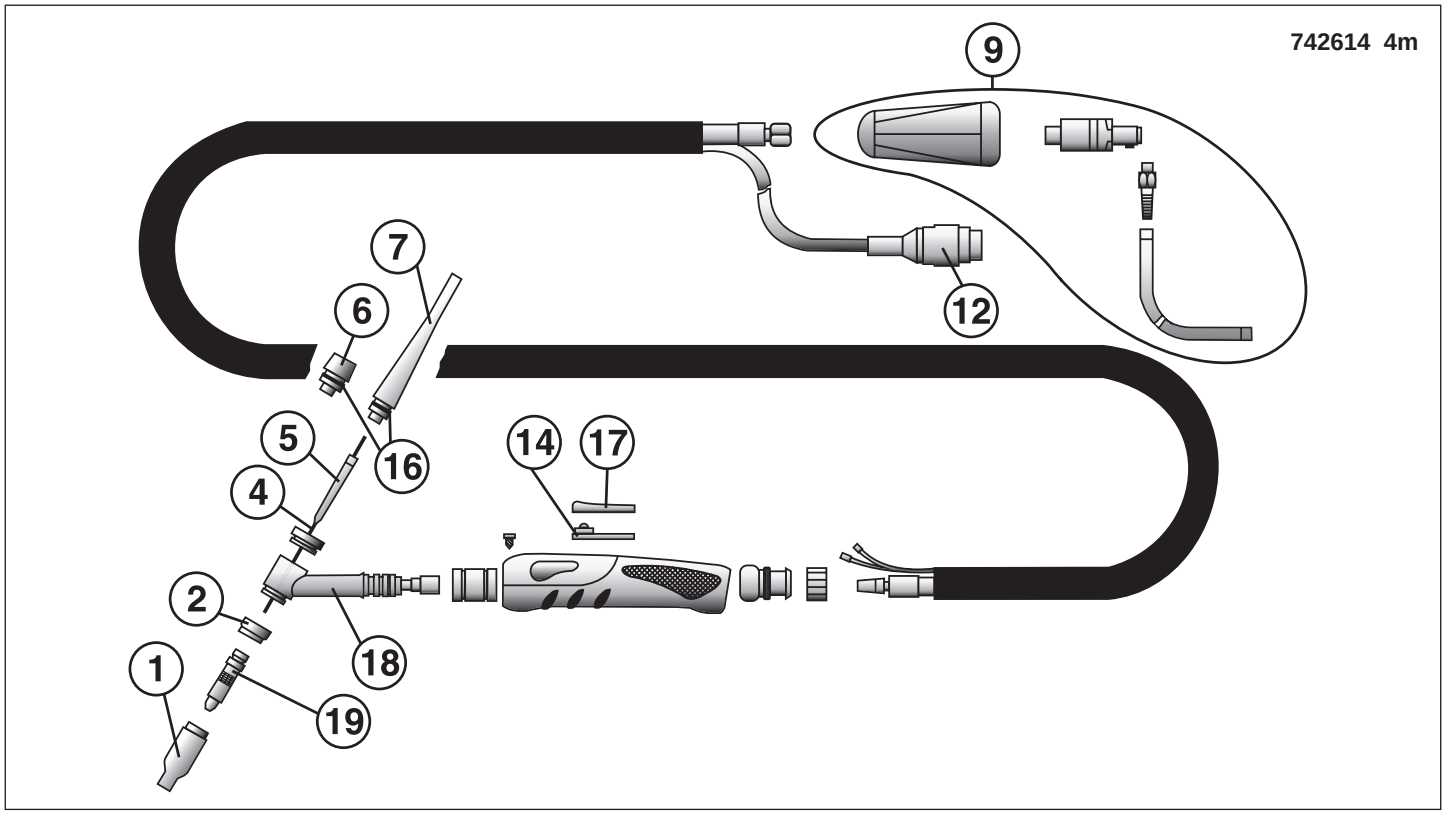

REF.	ELENCO PEZZI RICAMBIO TORCIA LISTE PIECES DETACHEES TORCHE SPARE PARTS LIST TORCH ERSATZTEILLISTE SCLAUCHPAKET PIEZAS DE REPUESTO ANTORCHA	CODICE CODE KODE
1	Kit 10 ugelli ceramici nr.10 Kit 10 buses ceramiques nr.10 Kit 10 ceramic nozzles nr.10 Kit 10 keramikdüsen nr.10 Kit 10 inyectores ceramicos nr.10	802248
1	Kit 10 ugelli ceramici nr.8 Kit 10 buses ceramiques nr.8 Kit 10 ceramic nozzles nr.8 Kit 10 keramikdüsen nr.8 Kit 10 inyectores ceramicos nr.8	802247
1	Kit 10 ugelli ceramici nr.7 Kit 10 buses ceramiques nr.7 Kit 10 ceramic nozzles nr.7 Kit 10 keramikdüsen nr.7 Kit 10 inyectores ceramicos nr.7	802246
1	Kit 10 ugelli ceramici nr.6 Kit 10 buses ceramiques nr.6 Kit 10 ceramic nozzles nr.6 Kit 10 keramikdüsen nr.6 Kit 10 inyectores ceramicos nr.6	802245
1	Kit 10 ugelli ceramici nr.4 Kit 10 buses ceramiques nr.4 Kit 10 ceramic nozzles nr.4 Kit 10 keramikdüsen nr.4 Kit 10 inyectores ceramicos nr.4	802244
2	Isolante Isolant Insulator Isolator Aislador	722248
4	Kit 10 elettr.Tungsteno puro d. 4 Mm Kit 10 electr.Tungstene pur d. 4 Mm Kit 10 pure tungsten electr. D. 4 Mm Kit 10 reinwolfram elektr. D. 4 Mm Kit 10 electr.Tungsteno puro d. 4 Mm	802238
4	Kit 10 elettr.Tungsteno puro d.3,2 Mm Kit 10 electr.Tungstene pur d.3,2 Mm Kit 10 pure tungsten electr. D.3,2 Mm Kit 10 reinwolfram elektr. D.3,2 Mm Kit 10 electr.Tungsteno puro d.3,2 Mm	802237
4	Kit 10 elettr.Tungsteno puro d.2,4 Mm Kit 10 electr.Tungstene pur d.2,4 Mm Kit 10 pure tungsten electr. D.2,4 Mm Kit 10 reinwolfram elektrm d.2,4 Mm Kit 10 electr.Tungsteno puro d.2,4 Mm	802236
4	Kit 10 elettr.Tungsteno puro d.1,6 Mm Kit 10 electr.Tungstene pur d.1,6 Mm Kit 10 pure tungsten electr. D.1,6 Mm Kit 10 reinwolfram elektr. D.1,6 Mm Kit 10 electr.Tungsteno puro d.1,6 Mm	802235
4	Kit 10 elettr.Tungsteno ceriato d.3,2 Mm Kit 10 electr.Tungstene-cerium d.3,2 Mm Kit 10 cerium-tungsten electr. D.3,2 Mm Kit 10 wolfram-zerium elektr. D.3,2 Mm Kit 10 electr.Tungsteno cerio d.3,2 Mm	802233
4	Kit 10 elettr.Tungsteno ceriato d.2,4 Mm Kit 10 electr.Tungstene-cerium d.2,4 Mm Kit 10 cerium-tungsten electr. D.2,4 Mm Kit 10 wolfram-zerium elektr. D.2,4 Mm Kit 10 electr.Tungsteno cerio d.2,4 Mm	802232

REF.	ELENCO PEZZI RICAMBIO TORCIA LISTE PIECES DETACHEES TORCHE SPARE PARTS LIST TORCH ERSATZTEILLISTE SCLAUCHPAKET PIEZAS DE REPUESTO ANTORCHA	CODICE CODE KODE
4	Kit 10 elettr.Tungsteno ceriato d.1,6 Mm Kit 10 electr.Tungstene-cerium d.1,6 Mm Kit 10 cerium-tungsten electr. D.1,6 Mm Kit 10 wolfram-zerium elektr. D.1,6 Mm Kit 10 electr.Tungsteno cerio d.1,6 Mm	802222
4	Kit 10 elettr.Tungsteno ceriato d.1 Mm Kit 10 electr.Tungstene-cerium d.1 Mm Kit 10 cerium-tungsten electr. D.1 Mm Kit 10 wolfram-zerium elektr. D.1 Mm Kit 10 electr.Tungsteno cerio d.1 Mm	802220
5	Kit 3 pinze serra elettrodo d.1,0 Mm Kit 3 pinces porte-electrode d.1,0 Mm Kit 3 electrode holder clamps d.1,0 Mm Kit 3 elektrodenhalterzangen d.1,0 Mm Kit 3 pinzas porta electrodo d.1,0 Mm	802239
5	Kit 3 pinze serra elettrodo d.1,6 Mm Kit 3 pinces porte-electrode d.1,6 Mm Kit 3 electrode holder clamps d.1,6 Mm Kit 3 elektrodenhalterzangen d.1,6 Mm Kit 3 pinzas porta electrodo d.1,6 Mm	802240
5	Kit 3 pinze serra elettrodo d.2,4 Mm Kit 3 pinces porte-electrode d.2,4 Mm Kit 3 electrode holder clamps d.2,4 Mm Kit 3 elektrodenhalterzangen d.2,4 Mm Kit 3 pinzas porta electrodo d.2,4 Mm	802241
5	Kit 3 pinze serra elettrodo d.3,2 Mm Kit 3 pinces porte-electrode d.3,2 Mm Kit 3 electrode holder clamps d.3,2 Mm Kit 3 elektrodenhalterzangen d.3,2 Mm Kit 3 pinzas porta electrodo d.3,2 Mm	802242
5	Kit 3 pinze serra elettrodo d.4 Mm Kit 3 pinces porte-electrode d.4 Mm Kit 3 electrode holder clamps d.4 Mm Kit 3 elektrodenhalterzangen d.4 Mm Kit 3 pinzas porta electrodo d.4 Mm	802243
6	Cappuccio corto st17-26 Capuchon petit st17-26 Short cap st17-26 Kurze kappe st17-26 Capuchon corto st17-26	722192
7	Cappuccio lungo st17-26 Capuchon long Long cap Lange kappe Capuchon largo	722193
9	Kit attacco atlas 50mmq Kit embout atlas 50mmq Atlas 50mmq connection kit Atlas 50mmq anschluss kit Kit conexion atlas 50mmq	981443
12	Spina 5p Fiche 5p 5p plug 5p stecker Espina 5p	742599
14	Contatto pulsante Contact poussoir Pushbotton contact Druckknopfkontakt Contacto pulsador	452089

REF.	ELENCO PEZZI RICAMBIO TORCIA LISTE PIECES DETACHEES TORCHE SPARE PARTS LIST TORCH ERSATZTEILLISTE SCLAUCHPAKET PIEZAS DE REPUESTO ANTORCHA	CODICE CODE KODE
16	Anello or Bague or Or ring Or ring Anillo or	722061
17	Pulsante Poussoir Pushbotton Druckknopf Pulsador	742042
18	Corpo torcia Corps torche Torch body Schlauchpaketteil Cuerpo de antorcha	722944
19	Kit 3 diffusori elettrodo d.1 Mm Kit 3 diffuseurs electrode d.1 Mm Kit 3 electrode diffusers d.1 Mm Kit 3 gasverteiler d.1 Mm Kit 3 difusores electrodo d.1 Mm	802249
19	Kit 3 diffusori elettrodo d.1,6 Mm Kit 3 diffuseurs electrode d.1,6 Mm Kit 3 electrode diffusers d.1,6 Mm Kit 3 gasverteiler d.1,6 Mm Kit 3 difusores electrodo d.1,6 Mm	802250
19	Kit 3 diffusori elettrodo d.2,4 Mm Kit 3 diffuseurs electrode d.2,4 Mm Kit 3 electrode diffusers d.2,4 Mm Kit 3 gasverteiler d.2,4 Mm Kit 3 difusores electrodo d.2,4 Mm	802251
19	Kit 3 diffusori elettrodo d.3,2 Mm Kit 3 diffuseurs electrode d.3,2 Mm Kit 3 electrode diffusers d.3,2 Mm Kit 3 gasverteiler d.3,2 Mm Kit 3 difusores electrodo d.3,2 Mm	802252
19	Kit 3 diffusori elettrodo d.4 Mm Kit 3 diffuseurs electrode d.4 Mm Kit 3 electrode diffusers d.4 Mm Kit 3 gasverteiler d.4 Mm Kit 3 difusores electrodo d.4 Mm	802253

ELENCO PEZZI DI RICAMBIO
LISTE PIECES DETACHEES
SPARE PARTS LIST
ERSATZTEILLISTE
PIEZAS DE REPUESTO

SUPERIOR TIG 251 DC-HF/LIFT VRD

Esploso macchina, Dessin appareil, Machine drawing, Explosions Zeichnung des Geräts, Diseño seccionado maquina.



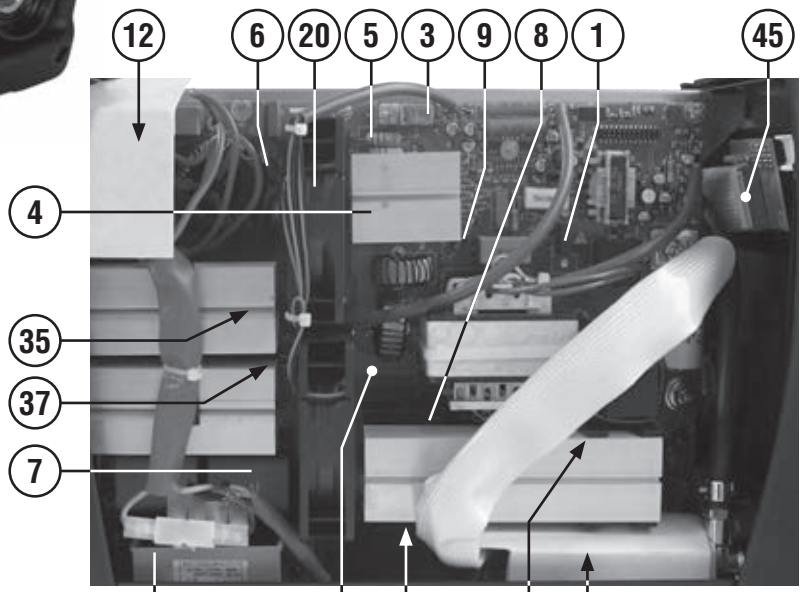

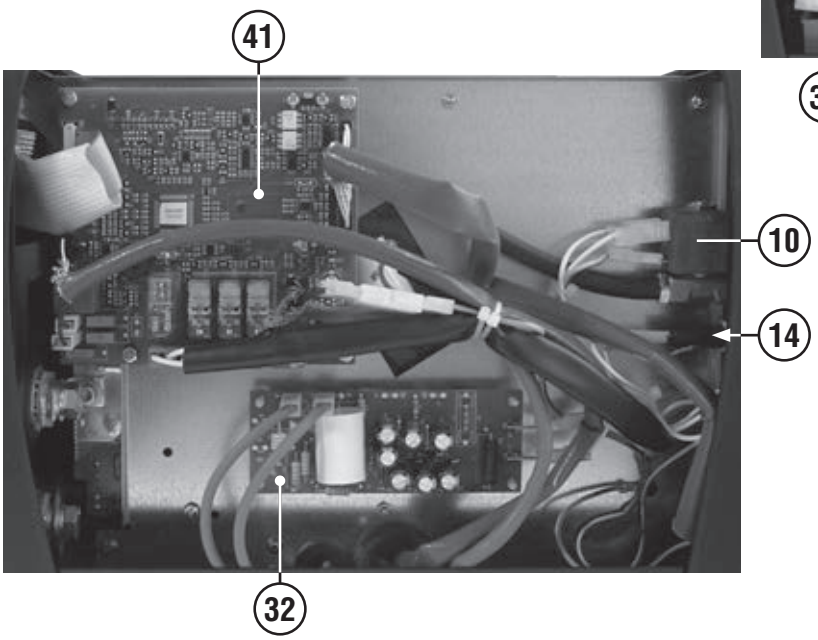

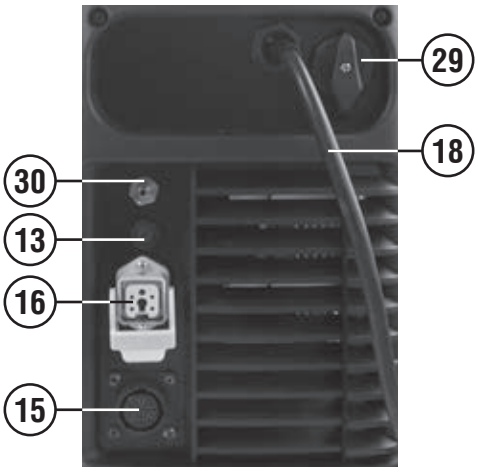

REF.	ELENCO PEZZI DI RICAMBIO PIECES DETACHEES SPARE PARTS LIST ERSATZTEILLISTE PIEZAS DE REPUESTO	CODICE CODE KODE
1	Igbt Igbt Igbt Igbt Igbt	111095
2	Diodo Diode Diode Diode Diodo	116839
3	Rele' 24vdc 17ma 250v 16a 1no Relais 24vdc 17ma 250v 16a 1no Relais 24vdc 17ma 250v 16a 1no Relais 24vdc 17ma 250v 16a 1no Conectador 24vdc 17ma 250v 16a 1no	116738
4	Ponte monofase Pont monophase Single phase bridge Einfasige brücke Puente monofasico	111259
5	Resistenza Resistance Resistance Widerstand Resistencia	116752
6	Varistore Varistor Varistor Varistor Varistor	116760
7	Condensatore Condensateur Condenser Kondensator Condensator	116882
8	Soppressore di tensione Soppresseur de tension Voltage suppressor Spannungssoppressor Sopresor de tension	116935
9	Res. Met. 10r 2w 5% fuse Res. Met. 10r 2w 5% fuse Res. Met. 10r 2w 5% fuse Res. Met. 10r 2w 5% fuse Res. Met. 10r 2w 5% fuse	116962
10	Elettrovalvola Electrovanne Electrovalve Elektroventil Electrovalvula	121800
11	Termostato Thermostat Thermostat Thermostat Termostato	121546
12	Commutatore Commutateur Switch Schalter Switch	121556
13	Portafusibile Porte fusible Fuse holder Sicherungshalter Porta fusible	122159
14	Fusibile Fusible Fuse Sicherung Fusible	122432
15	Cablaggio controllo/c.A.D. Cable de controle/c.A.D. Control cable/c.A.D. Kontrolkabel/c.A.D. Cable de control/c.A.D.	124105
16	Cablaggio g.R.A. Cable g.R.A. G.R.A. Cable G.R.A. Kabel Cable g.R.A.	124657
17	Cablaggio pulsante torcia Cable poussoir torche Torch button cable Brennerknopfskabel Cable pulsador antorcha	124766
18	Cavo alim. 4g1.5 2 M Cable alim. 4g1.5 2 M Mains cable 4g1.5 2 M Netzkabel 4g1.5 2 M Cable alim. 4g1.5 2 M	132237
20	Ventilatore Ventilateur Fan Ventilator Ventilador	152269
26	Frontale Partie frontal Front panel Geraetefront Frontal	321126
27	Retro Partie arriere Back panel Rueckseite Trasera	321127
28	Manico Poignee Handle Handgriff Manija	321128
29	Assieme manopola per commutatore Set poigne pour commutateur Switch knob set Umschaltergriff set Set manjia para conmutador	323101
30	Raccordo Raccord Pipe fitting Anschluss Empalme	602376
31	Presa atlas 50mmq Prise atlas 50mmq Atlas socket 50mmq Atlas steckdose 50mmq Enchufe atlas 50mmq	712036
32	Kit scheda hf Kit fiche hf Hf board kit Hf karte kit Kit tarjeta hf	980021
33	Manopola per potenziometro Poignee pour potentiometre Potentiometer knob Potentiometergriff Manija por potenciometro	121547
34	Kit raccordo entrata gas Kit raccord entree gaz Gas pipe connector kit Gaseintrittkit Kit racor entrada gas	980548
35	Kit igbt + diodo Kit igbt + diode Igbt + diode kit Igbt + diode kit Kit igbt + diodo	981183
36	Kit autotrasfo Kit autotrasfo Autotrasfo kit Autotrasfo kit Kit autotrasfo	981278
37	Kit trasformatore impulsi Kit transformateur d'impulsions Impulse transformer kit Impuls-transformator kit Kit transformador de impulsos	981372
38	Kit scheda potenza Kit platine puissance Power board kit Leistungskartekit Kit tarjeta de potencia	981399
40	Kit trasformatore Kit trasformateur Transformer kit Trafokit Kit transformador	981434
41	Kit scheda controllo Kit module de controle Control card kit Steuerungskarte kit Kit tarjeta controlo	981435
42	Kit scheda keypad Kit module keypad Pcb kit keypad Steuerungskit keypad Kit tarjeta keypad	981436
43	Kit mantello Kit capot Cover kit Deckelkit Kit panel de cobertura	981437
44	Kit fondo Kit chassis Bottom kit Bodenteil kit Kit fondo	981438
45	Kit scheda pannello Kit platine frontal Kit front panel card Kit geraetefrontskarte Kit tarjeta frontal	981535

Schema elettrico, Schéma électrique, Diagram, Schaltplan, Esquema de conexiones.

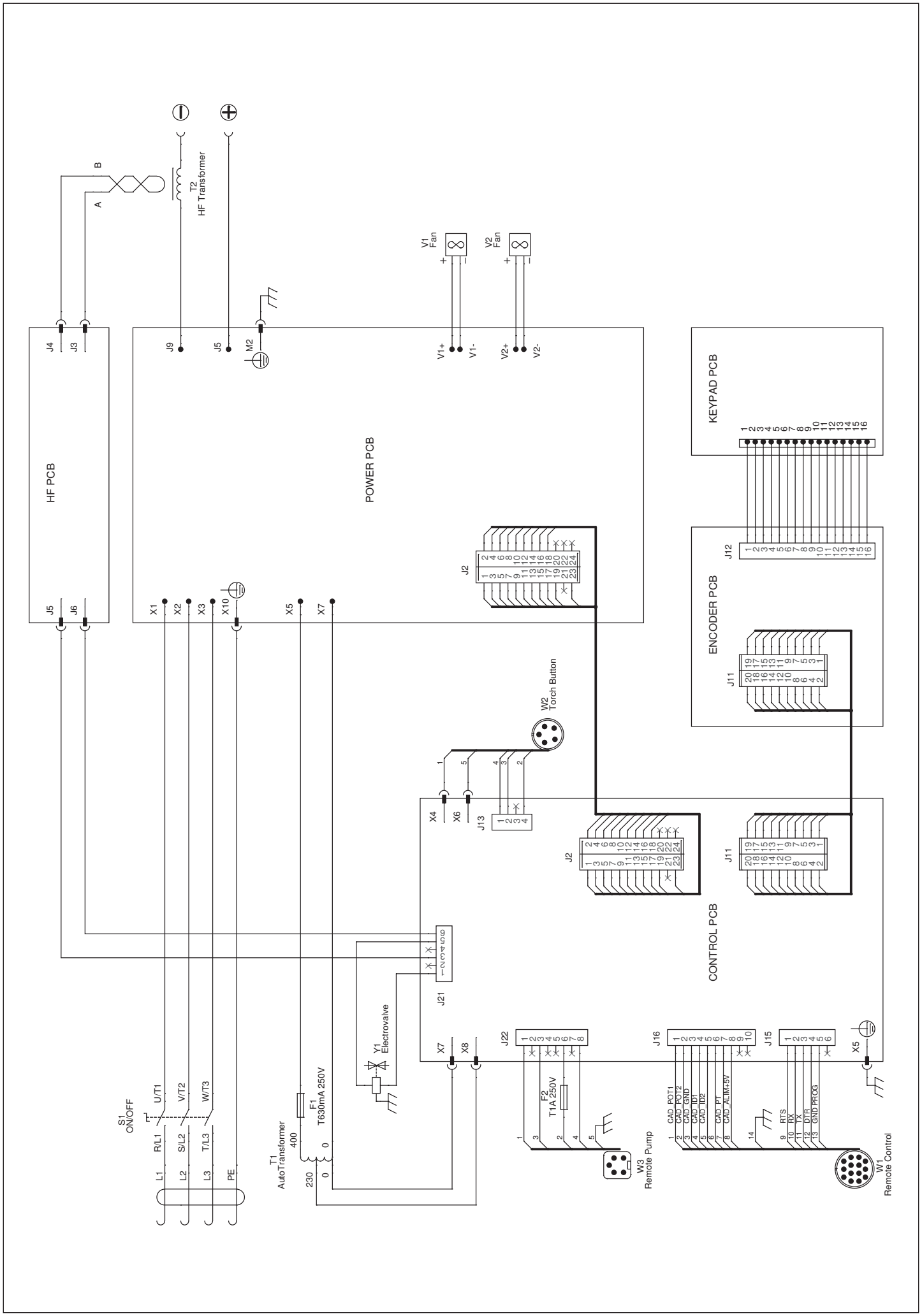

Esploso torcia, Dessin torche, Torch drawing, Schlauchpaket - Explosionszeichnung, Diseño seccionado antorcha.

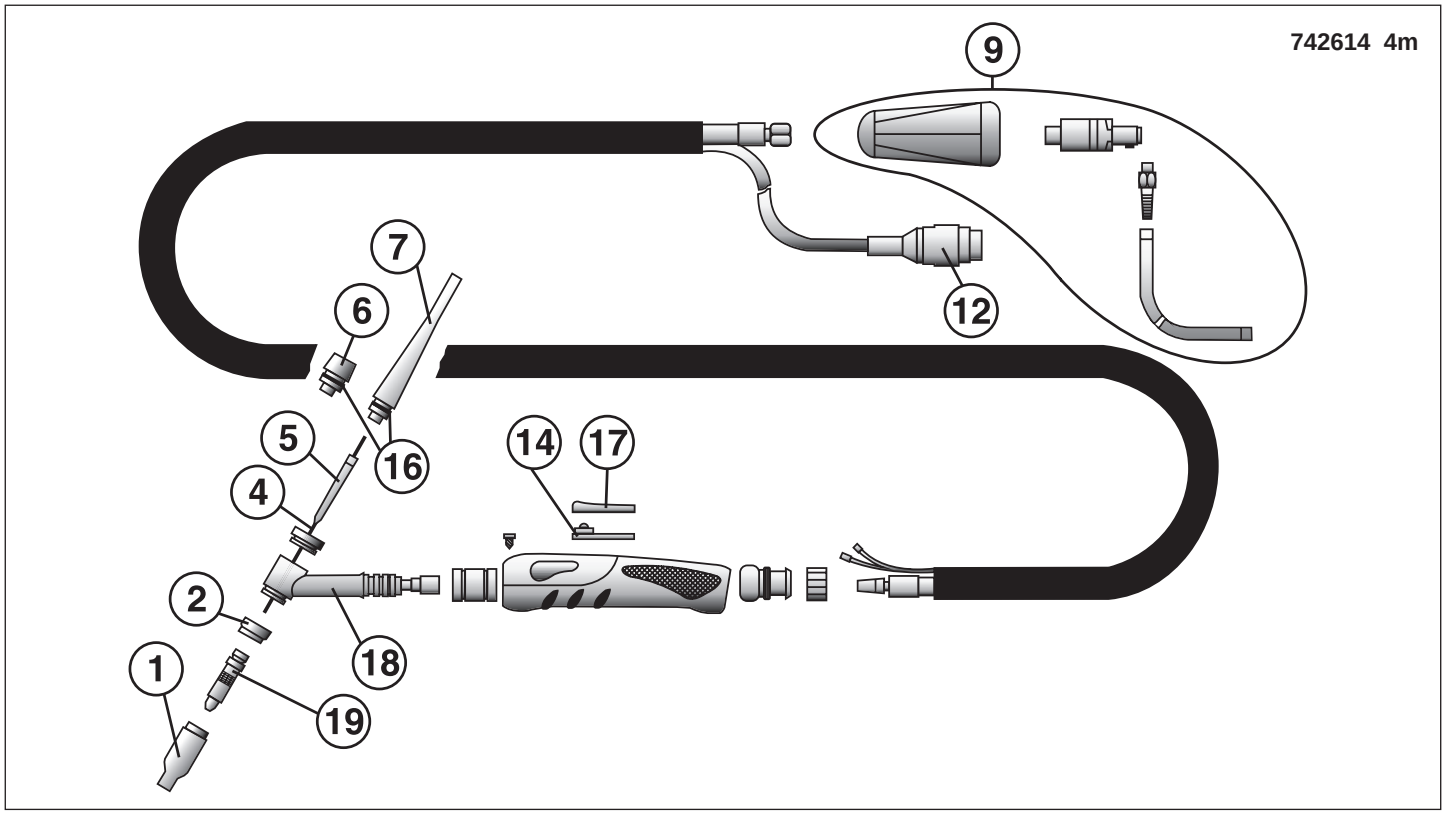

REF.	ELENCO PEZZI RICAMBIO TORCIA LISTE PIECES DETACHEES TORCHE SPARE PARTS LIST TORCH ERSATZTEILLISTE SCLAUCHPAKET PIEZAS DE REPUESTO ANTORCHA	CODICE CODE KODE
1	Kit 10 ugelli ceramici nr.10 Kit 10 buses ceramiques nr.10 Kit 10 ceramic nozzles nr.10 Kit 10 keramikdüsen nr.10 Kit 10 inyectores ceramicos nr.10	802248
1	Kit 10 ugelli ceramici nr.8 Kit 10 buses ceramiques nr.8 Kit 10 ceramic nozzles nr.8 Kit 10 keramikdüsen nr.8 Kit 10 inyectores ceramicos nr.8	802247
1	Kit 10 ugelli ceramici nr.7 Kit 10 buses ceramiques nr.7 Kit 10 ceramic nozzles nr.7 Kit 10 keramikdüsen nr.7 Kit 10 inyectores ceramicos nr.7	802246
1	Kit 10 ugelli ceramici nr.6 Kit 10 buses ceramiques nr.6 Kit 10 ceramic nozzles nr.6 Kit 10 keramikdüsen nr.6 Kit 10 inyectores ceramicos nr.6	802245
1	Kit 10 ugelli ceramici nr.4 Kit 10 buses ceramiques nr.4 Kit 10 ceramic nozzles nr.4 Kit 10 keramikdüsen nr.4 Kit 10 inyectores ceramicos nr.4	802244
2	Isolante Isolant Insulator Isolator Aislador	722248
4	Kit 10 elettr.Tungsteno puro d. 4 Mm Kit 10 electr.Tungstene pur d. 4 Mm Kit 10 pure tungsten electr. D. 4 Mm Kit 10 reinwolfram elektr. D. 4 Mm Kit 10 electr.Tungsteno puro d. 4 Mm	802238
4	Kit 10 elettr.Tungsteno puro d.3,2 Mm Kit 10 electr.Tungstene pur d.3,2 Mm Kit 10 pure tungsten electr. D.3,2 Mm Kit 10 reinwolfram elektr. D.3,2 Mm Kit 10 electr.Tungsteno puro d.3,2 Mm	802237
4	Kit 10 elettr.Tungsteno puro d.2,4 Mm Kit 10 electr.Tungstene pur d.2,4 Mm Kit 10 pure tungsten electr. D.2,4 Mm Kit 10 reinwolfram elektrm d.2,4 Mm Kit 10 electr.Tungsteno puro d.2,4 Mm	802236
4	Kit 10 elettr.Tungsteno puro d.1,6 Mm Kit 10 electr.Tungstene pur d.1,6 Mm Kit 10 pure tungsten electr. D.1,6 Mm Kit 10 reinwolfram elektr. D.1,6 Mm Kit 10 electr.Tungsteno puro d.1,6 Mm	802235
4	Kit 10 elettr.Tungsteno ceriato d.3,2 Mm Kit 10 electr.Tungstene-cerium d.3,2 Mm Kit 10 cerium-tungsten electr. D.3,2 Mm Kit 10 wolfram-zerium elektr. D.3,2 Mm Kit 10 electr.Tungsteno cerio d.3,2 Mm	802233
4	Kit 10 elettr.Tungsteno ceriato d.2,4 Mm Kit 10 electr.Tungstene-cerium d.2,4 Mm Kit 10 cerium-tungsten electr. D.2,4 Mm Kit 10 wolfram-zerium elektr. D.2,4 Mm Kit 10 electr.Tungsteno cerio d.2,4 Mm	802232

REF.	ELENCO PEZZI RICAMBIO TORCIA LISTE PIECES DETACHEES TORCHE SPARE PARTS LIST TORCH ERSATZTEILLISTE SCLAUCHPAKET PIEZAS DE REPUESTO ANTORCHA	CODICE CODE KODE
4	Kit 10 elettr.Tungsteno ceriato d.1,6 Mm Kit 10 electr.Tungstene-cerium d.1,6 Mm Kit 10 cerium-tungsten electr. D.1,6 Mm Kit 10 wolfram-zerium elektr. D.1,6 Mm Kit 10 electr.Tungsteno cerio d.1,6 Mm	802222
4	Kit 10 elettr.Tungsteno ceriato d.1 Mm Kit 10 electr.Tungstene-cerium d.1 Mm Kit 10 cerium-tungsten electr. D.1 Mm Kit 10 wolfram-zerium elektr. D.1 Mm Kit 10 electr.Tungsteno cerio d.1 Mm	802220
5	Kit 3 pinze serra elettrodo d.1,0 Mm Kit 3 pinces porte-electrode d.1,0 Mm Kit 3 electrode holder clamps d.1,0 Mm Kit 3 elektrodenhalterzangen d.1,0 Mm Kit 3 pinzas porta electrodo d.1,0 Mm	802239
5	Kit 3 pinze serra elettrodo d.1,6 Mm Kit 3 pinces porte-electrode d.1,6 Mm Kit 3 electrode holder clamps d.1,6 Mm Kit 3 elektrodenhalterzangen d.1,6 Mm Kit 3 pinzas porta electrodo d.1,6 Mm	802240
5	Kit 3 pinze serra elettrodo d.2,4 Mm Kit 3 pinces porte-electrode d.2,4 Mm Kit 3 electrode holder clamps d.2,4 Mm Kit 3 elektrodenhalterzangen d.2,4 Mm Kit 3 pinzas porta electrodo d.2,4 Mm	802241
5	Kit 3 pinze serra elettrodo d.3,2 Mm Kit 3 pinces porte-electrode d.3,2 Mm Kit 3 electrode holder clamps d.3,2 Mm Kit 3 elektrodenhalterzangen d.3,2 Mm Kit 3 pinzas porta electrodo d.3,2 Mm	802242
5	Kit 3 pinze serra elettrodo d.4 Mm Kit 3 pinces porte-electrode d.4 Mm Kit 3 electrode holder clamps d.4 Mm Kit 3 elektrodenhalterzangen d.4 Mm Kit 3 pinzas porta electrodo d.4 Mm	802243
6	Cappuccio corto st17-26 Capuchon petit st17-26 Short cap st17-26 Kurze kappe st17-26 Capuchon corto st17-26	722192
7	Cappuccio lungo st17-26 Capuchon long Long cap Lange kappe Capuchon largo	722193
9	Kit attacco atlas 50mmq Kit embout atlas 50mmq Atlas 50mmq connection kit Atlas 50mmq anschluss kit Kit conexion atlas 50mmq	981443
12	Spina 5p Fiche 5p 5p plug 5p stecker Espina 5p	742599
14	Contatto pulsante Contact poussoir Pushbotton contact Druckknopfkontakt Contacto pulsador	452089

REF.	ELENCO PEZZI RICAMBIO TORCIA LISTE PIECES DETACHEES TORCHE SPARE PARTS LIST TORCH ERSATZTEILLISTE SCLAUCHPAKET PIEZAS DE REPUESTO ANTORCHA	CODICE CODE KODE
16	Anello or Bague or Or ring Or ring Anillo or	722061
17	Pulsante Poussoir Pushbotton Druckknopf Pulsador	742042
18	Corpo torcia Corps torche Torch body Schlauchpaketteil Cuerpo de antorcha	722944
19	Kit 3 diffusori elettrodo d.1 Mm Kit 3 diffuseurs electrode d.1 Mm Kit 3 electrode diffusers d.1 Mm Kit 3 gasverteiler d.1 Mm Kit 3 difusores electrodo d.1 Mm	802249
19	Kit 3 diffusori elettrodo d.1,6 Mm Kit 3 diffuseurs electrode d.1,6 Mm Kit 3 electrode diffusers d.1,6 Mm Kit 3 gasverteiler d.1,6 Mm Kit 3 difusores electrodo d.1,6 Mm	802250
19	Kit 3 diffusori elettrodo d.2,4 Mm Kit 3 diffuseurs electrode d.2,4 Mm Kit 3 electrode diffusers d.2,4 Mm Kit 3 gasverteiler d.2,4 Mm Kit 3 difusores electrodo d.2,4 Mm	802251
19	Kit 3 diffusori elettrodo d.3,2 Mm Kit 3 diffuseurs electrode d.3,2 Mm Kit 3 electrode diffusers d.3,2 Mm Kit 3 gasverteiler d.3,2 Mm Kit 3 difusores electrodo d.3,2 Mm	802252
19	Kit 3 diffusori elettrodo d.4 Mm Kit 3 diffuseurs electrode d.4 Mm Kit 3 electrode diffusers d.4 Mm Kit 3 gasverteiler d.4 Mm Kit 3 difusores electrodo d.4 Mm	802253

ELENCO PEZZI DI RICAMBIO
LISTE PIECES DETACHEES
SPARE PARTS LIST
ERSATZTEILLISTE
PIEZAS DE REPUESTO

SUPERIOR TIG 252 AC/DC HF/LIFT VRD

TELWIN

Esploso macchina, Dessin appareil, Machine drawing, Explosions Zeichnung des Geräts, Diseño seccionado maquina.



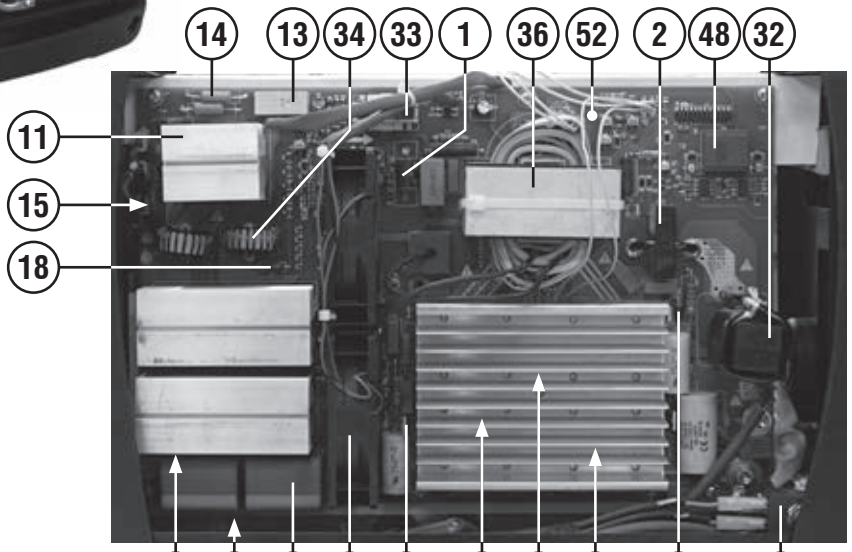

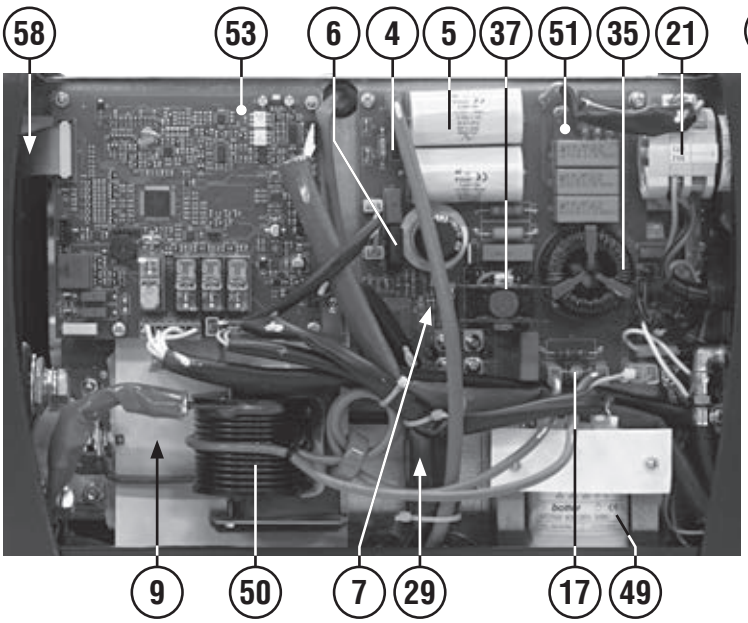

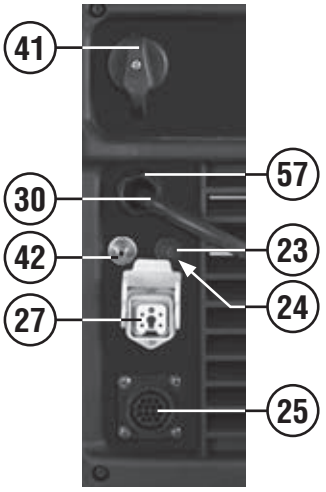

REF.	ELENCO PEZZI DI RICAMBIO PIECES DETACHEES SPARE PARTS LIST ERSATZTEILLISTE PIEZAS DE REPUESTO	CODICE CODE KODE
1	Igbt Igbt Igbt Igbt Igbt	111095
2	Sensore hall Capteur hall Sensor hall Messfühler hall Sensor hall	111191
3	Igbt Igbt Igbt Igbt Igbt	111193
4	Diodo Diode Diode Diode Diodo	112689
5	Cond.Mkp ass. 5u 700v c4g Cond.Mkp ass. 5u 700v c4g Cond.Mkp ass. 5u 700v c4g Cond.Mkp ass. 5u 700v c4g Cond.Mkp ass. 5u 700v c4g	112895
6	Raddrizzatore monofase Redresseur monophase Single-phase rectifier Einphasiger gleichrichter Rectificador monofasico	112949
7	Diodo by228 3a 1500v Diode by228 3a 1500v Diode by228 3a 1500v Diode by228 3a 1500v Diodo by228 3a 1500v	113072
8	Diodo Diode Diode Diode Diodo	113747
9	Resistenza Resistance Resistance Widerstand Resistencia	116443
10	Diodo 15a 600v 60ns to220ac Diode 15a 600v 60ns to220ac Diode 15a 600v 60ns to220ac Diode 15a 600v 60ns to220ac Diodo 15a 600v 60ns to220ac	116486
11	Ponte monofase Pont monophase Single phase bridge Einfasige brücke Puente monofasico	111259
12	Soppressore di tensione Soppresseur de tension Voltage suppressor Spannungssoppressor Sopresor de tension	116733
13	Rele' 24vdc 17ma 250v 16a 1no Relais 24vdc 17ma 250v 16a 1no Relais 24vdc 17ma 250v 16a 1no Relais 24vdc 17ma 250v 16a 1no Conectador 24vdc 17ma 250v 16a 1no	116738
14	Resistenza Resistance Resistance Widerstand Resistencia	116752
15	Varistore Varistor Varistor Varistor Varistor	116760
16	Condensatore Condensateur Condenser Kondensator Condensator	116882
17	Scaricatore a gas 400v Dechargeur de gaz 400v Gas discharger 400v Gas entladung 400v Descargador de gas 400v	116904
18	Res. Met. 10r 2w 5% fuse Res. Met. 10r 2w 5% fuse Res. Met. 10r 2w 5% fuse Res. Met. 10r 2w 5% fuse Res. Met. 10r 2w 5% fuse	116962
19	Elettrovalvola Electrovanne Electrovalve Elektroventil Electrovalvula	121800
20	Termostato Thermostat Thermal switch Thermostat Termostato	121261
21	Commutatore Commutateur Switch Schalter Switch	121556
23	Portafusibile Porte fusible Fuse holder Sicherungshalter Porta fusible	122159
24	Fusibile Fusible Fuse Sicherung Fusible	122437
25	Cablaggio controllo/c.A.D. Cable de controle/c.A.D. Control cable/c.A.D. Kontrolkabel/c.A.D. Cable de control/c.A.D.	124105
26	Cablaggio resistenza Calbe resistance Resistance cable Widerstandskabel Cable resistencia	124656
27	Cablaggio g.R.A. Cable g.R.A. G.R.A. Cable G.R.A. Kabel Cable g.R.A.	124657
28	Cablaggio pulsante torcia Cable poussoir torche Torch button cable Brennerknopfskabel Cable pulsador antorcha	124658
29	Cablaggio ventilatore Cable de ventilateur Fan cable Ventilatorskabel Cable de vendilador	124668
30	Cavo alim. 4g1.5 2 M Cable alim. 4g1.5 2 M Mains cable 4g1.5 2 M Netzkabel 4g1.5 2 M Cable alim. 4g1.5 2 M	132237
31	Ventilatore Ventilateur Fan Ventilator Ventilador	152269
32	Induttanza Inductance Inductance Drossel Induccion	169556
33	Trasformatore flyback Transformateur flyback Flyback transformer Flyback transformator Transformador flyback	169997
34	Induttanza Inductance Inductance Drossel Induccion	169746
35	Induttanza filtro Inductance filtre Filter inductor Filterdrossel Filtro induccion	169747
36	Trasformatore potenza Transformateur de puissance Power trafo Leistungstransformer Transformador de potencia	169789
37	Trasfo flyback hf Trasfo flyback hf Trasfo flyback hf Trasfo flyback hf Trasfo flyback hf	169795
38	Frontale Partie frontal Front panel Geraetefront Frontal	321117
39	Retro Partie arriere Back panel Rueckseite Trasera	321118
40	Manico Poignee Handle Handgriff Manija	321119
41	Assieme manopola per commutatore Set poigne pour commutateur Switch knob set Umschaltergriff set Set manjia para conmutador	323101
42	Raccordo Raccord Pipe fitting Anschluss Empalme	602376
43	Presa atlas 50mmq Prise atlas 50mmq Atlas socket 50mmq Atlas steckdose 50mmq Enchufe atlas 50mmq	712036
44	Manopola per potenziometro Poignee pour potentiometre Potentiometer knob Potentiometergriff Manija por potenciometro	121547
45	Kit raccordo entrata gas Kit raccord entree gaz Gas pipe connector kit Gaseintrittkit Kit racor entrada gas	980548
46	Kit igbt + diodo Kit igbt + diode Igbt + diode kit Igbt + diode kit Kit igbt + diodo	981370
48	Kit trasformatore impulsi Kit transformateur d'impulsions Impulse transformer kit Impuls-transformator kit Kit transformador de impulsos	981372
49	Kit trasformatore ausiliario Kit transformateur auxiliaire Auxiliary transformer kit Hilfstransformatorkit Kit transformador auxiliar	981401
50	Kit trasformatore hf Kit transformateur hf Hf transformer kit Hf transformator kit Kit transformador hf	981402
51	Kit scheda filtro Kit platine filtre Filter card kit Filterkartekit Kit tarjeta filtro	981403
52	Kit scheda potenza Kit platine puissance Power board kit Leistungskartekit Kit tarjeta de potencia	981404
53	Kit scheda controllo Kit module de controle Control card kit Steuerungskarte kit Kit tarjeta controlo	981405
54	Kit scheda keypad Kit module keypad Keypad card kit Keypad steuerungskit Kit tarjeta keypad	981406
55	Kit mantello Kit capot Cover kit Deckelkit Kit panel de cobertura	981407
56	Kit fondo Kit chassis Bottom kit Bodenteil kit Kit fondo	981408
57	Kit pressacavo + ghiera Kit presse cable + embout Kit cable bushing + ring nut Kit kabelhalter + nutmutter Kit prensa cable + virola	990046
58	Kit scheda pannello Kit platine frontal Kit front panel card Kit geraetefrontskarte Kit tarjeta frontal	981535

Schema elettrico, Schéma électrique, Diagram, Schaltplan, Esquema de conexiones.

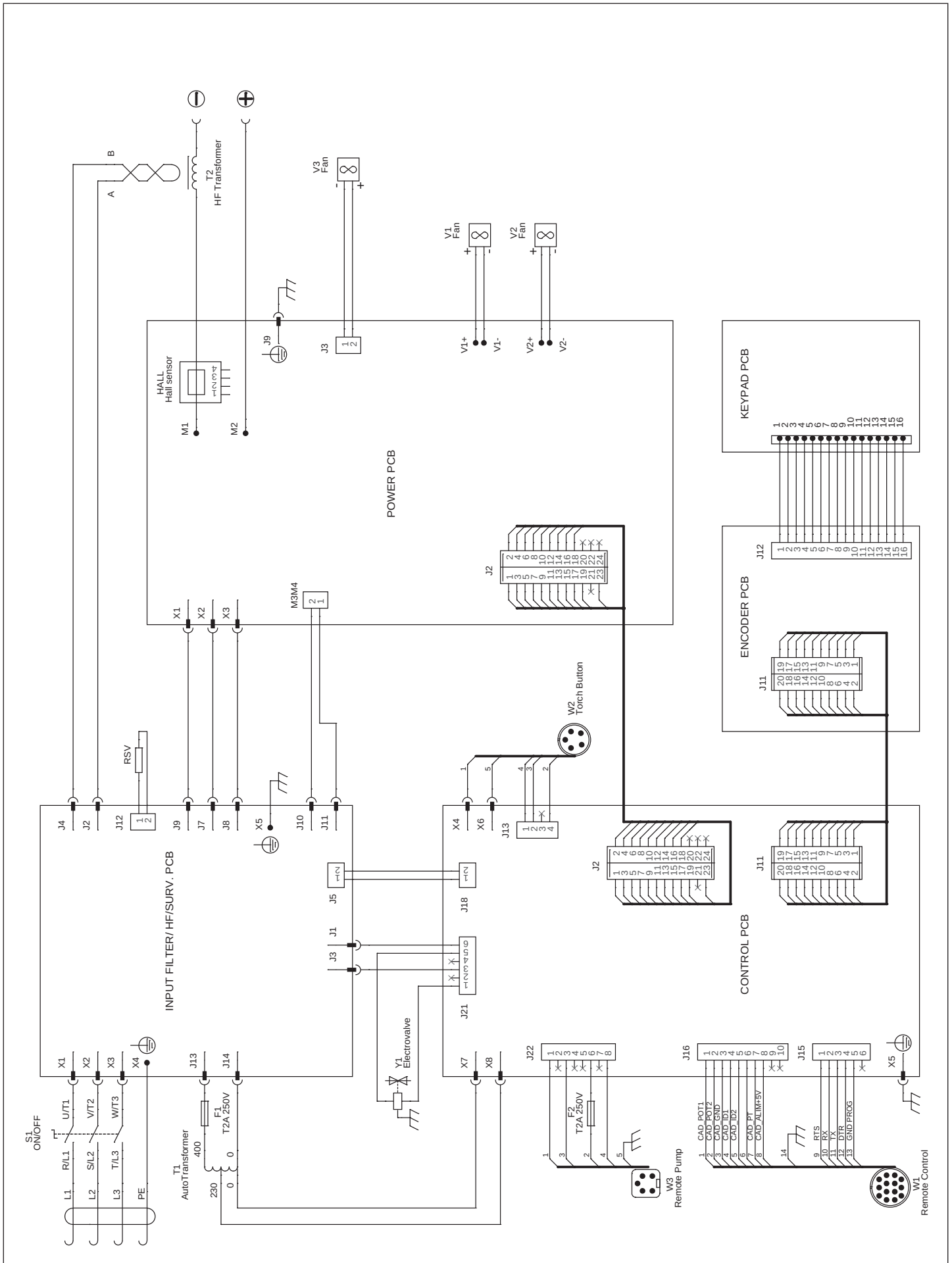

Esploso torcia, Dessin torche, Torch drawing, Schlauchpaket - Explosionszeichnung, Diseño seccionado antorcha.

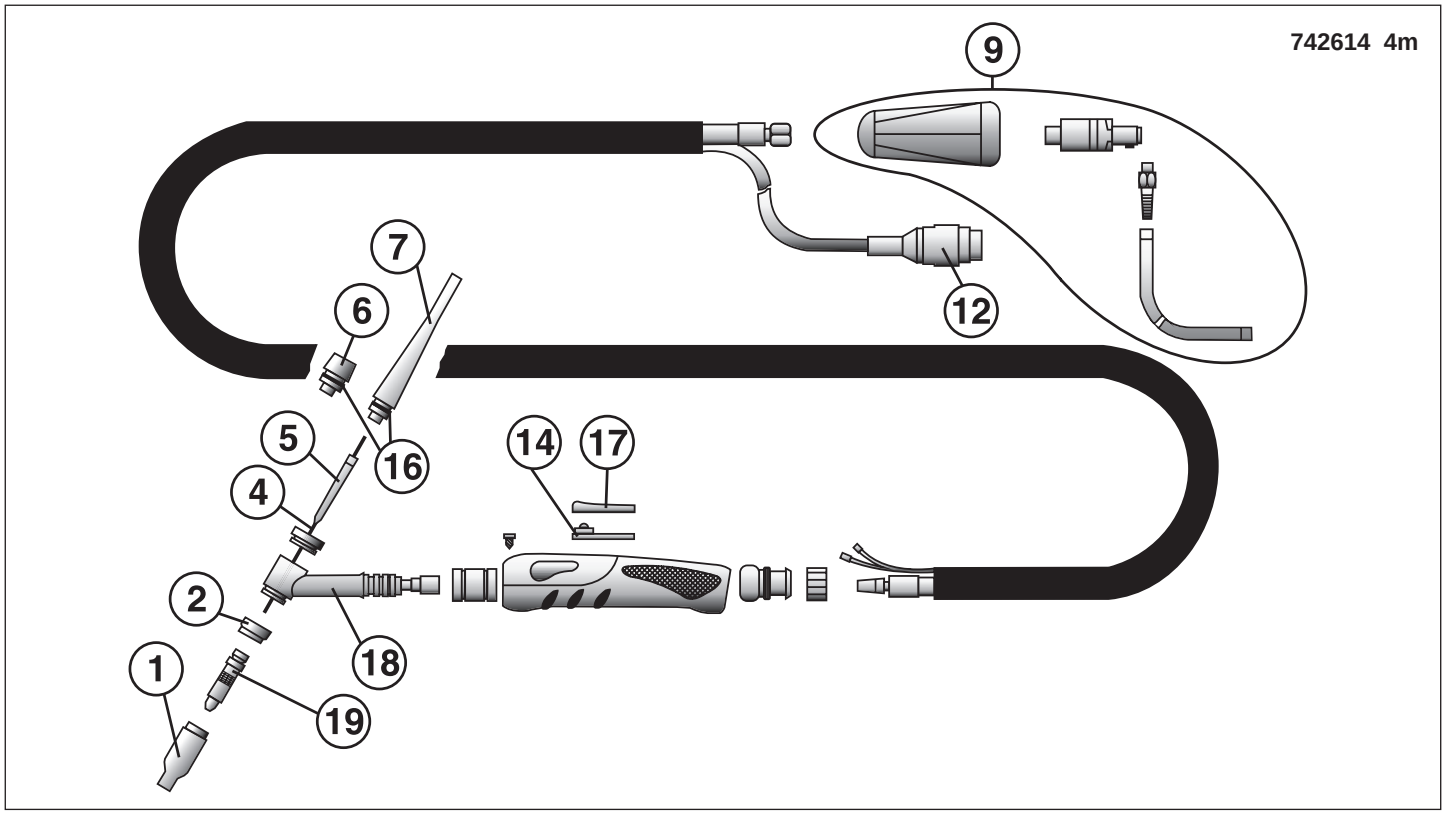

REF.	ELENCO PEZZI RICAMBIO TORCIA LISTE PIECES DETACHEES TORCHE SPARE PARTS LIST TORCH ERSATZTEILLISTE SCLAUCHPAKET PIEZAS DE REPUESTO ANTORCHA	CODICE CODE KODE
1	Kit 10 ugelli ceramici nr.10 Kit 10 buses ceramiques nr.10 Kit 10 ceramic nozzles nr.10 Kit 10 keramikdüsen nr.10 Kit 10 inyectores ceramicos nr.10	802248
1	Kit 10 ugelli ceramici nr.8 Kit 10 buses ceramiques nr.8 Kit 10 ceramic nozzles nr.8 Kit 10 keramikdüsen nr.8 Kit 10 inyectores ceramicos nr.8	802247
1	Kit 10 ugelli ceramici nr.7 Kit 10 buses ceramiques nr.7 Kit 10 ceramic nozzles nr.7 Kit 10 keramikdüsen nr.7 Kit 10 inyectores ceramicos nr.7	802246
1	Kit 10 ugelli ceramici nr.6 Kit 10 buses ceramiques nr.6 Kit 10 ceramic nozzles nr.6 Kit 10 keramikdüsen nr.6 Kit 10 inyectores ceramicos nr.6	802245
1	Kit 10 ugelli ceramici nr.4 Kit 10 buses ceramiques nr.4 Kit 10 ceramic nozzles nr.4 Kit 10 keramikdüsen nr.4 Kit 10 inyectores ceramicos nr.4	802244
2	Isolante Isolant Insulator Isolator Aislador	722248
4	Kit 10 elettr.Tungsteno puro d. 4 Mm Kit 10 electr.Tungstene pur d. 4 Mm Kit 10 pure tungsten electr. D. 4 Mm Kit 10 reinwolfram elektr. D. 4 Mm Kit 10 electr.Tungsteno puro d. 4 Mm	802238
4	Kit 10 elettr.Tungsteno puro d.3,2 Mm Kit 10 electr.Tungstene pur d.3,2 Mm Kit 10 pure tungsten electr. D.3,2 Mm Kit 10 reinwolfram elektr. D.3,2 Mm Kit 10 electr.Tungsteno puro d.3,2 Mm	802237
4	Kit 10 elettr.Tungsteno puro d.2,4 Mm Kit 10 electr.Tungstene pur d.2,4 Mm Kit 10 pure tungsten electr. D.2,4 Mm Kit 10 reinwolfram elektrm d.2,4 Mm Kit 10 electr.Tungsteno puro d.2,4 Mm	802236
4	Kit 10 elettr.Tungsteno puro d.1,6 Mm Kit 10 electr.Tungstene pur d.1,6 Mm Kit 10 pure tungsten electr. D.1,6 Mm Kit 10 reinwolfram elektr. D.1,6 Mm Kit 10 electr.Tungsteno puro d.1,6 Mm	802235
4	Kit 10 elettr.Tungsteno ceriato d.3,2 Mm Kit 10 electr.Tungstene-cerium d.3,2 Mm Kit 10 cerium-tungsten electr. D.3,2 Mm Kit 10 wolfram-zerium elektr. D.3,2 Mm Kit 10 electr.Tungsteno cerio d.3,2 Mm	802233
4	Kit 10 elettr.Tungsteno ceriato d.2,4 Mm Kit 10 electr.Tungstene-cerium d.2,4 Mm Kit 10 cerium-tungsten electr. D.2,4 Mm Kit 10 wolfram-zerium elektr. D.2,4 Mm Kit 10 electr.Tungsteno cerio d.2,4 Mm	802232

REF.	ELENCO PEZZI RICAMBIO TORCIA LISTE PIECES DETACHEES TORCHE SPARE PARTS LIST TORCH ERSATZTEILLISTE SCLAUCHPAKET PIEZAS DE REPUESTO ANTORCHA	CODICE CODE KODE
4	Kit 10 elettr.Tungsteno ceriato d.1,6 Mm Kit 10 electr.Tungstene-cerium d.1,6 Mm Kit 10 cerium-tungsten electr. D.1,6 Mm Kit 10 wolfram-zerium elektr. D.1,6 Mm Kit 10 electr.Tungsteno cerio d.1,6 Mm	802222
4	Kit 10 elettr.Tungsteno ceriato d.1 Mm Kit 10 electr.Tungstene-cerium d.1 Mm Kit 10 cerium-tungsten electr. D.1 Mm Kit 10 wolfram-zerium elektr. D.1 Mm Kit 10 electr.Tungsteno cerio d.1 Mm	802220
5	Kit 3 pinze serra elettrodo d.1,0 Mm Kit 3 pinces porte-electrode d.1,0 Mm Kit 3 electrode holder clamps d.1,0 Mm Kit 3 elektrodenhalterzangen d.1,0 Mm Kit 3 pinzas porta electrodo d.1,0 Mm	802239
5	Kit 3 pinze serra elettrodo d.1,6 Mm Kit 3 pinces porte-electrode d.1,6 Mm Kit 3 electrode holder clamps d.1,6 Mm Kit 3 elektrodenhalterzangen d.1,6 Mm Kit 3 pinzas porta electrodo d.1,6 Mm	802240
5	Kit 3 pinze serra elettrodo d.2,4 Mm Kit 3 pinces porte-electrode d.2,4 Mm Kit 3 electrode holder clamps d.2,4 Mm Kit 3 elektrodenhalterzangen d.2,4 Mm Kit 3 pinzas porta electrodo d.2,4 Mm	802241
5	Kit 3 pinze serra elettrodo d.3,2 Mm Kit 3 pinces porte-electrode d.3,2 Mm Kit 3 electrode holder clamps d.3,2 Mm Kit 3 elektrodenhalterzangen d.3,2 Mm Kit 3 pinzas porta electrodo d.3,2 Mm	802242
5	Kit 3 pinze serra elettrodo d.4 Mm Kit 3 pinces porte-electrode d.4 Mm Kit 3 electrode holder clamps d.4 Mm Kit 3 elektrodenhalterzangen d.4 Mm Kit 3 pinzas porta electrodo d.4 Mm	802243
6	Cappuccio corto st17-26 Capuchon petit st17-26 Short cap st17-26 Kurze kappe st17-26 Capuchon corto st17-26	722192
7	Cappuccio lungo st17-26 Capuchon long Long cap Lange kappe Capuchon largo	722193
9	Kit attacco atlas 50mmq Kit embout atlas 50mmq Atlas 50mmq connection kit Atlas 50mmq anschluss kit Kit conexion atlas 50mmq	981443
12	Spina 5p Fiche 5p 5p plug 5p stecker Espina 5p	742599
14	Contatto pulsante Contact poussoir Pushbotton contact Druckknopfkontakt Contacto pulsador	452089

REF.	ELENCO PEZZI RICAMBIO TORCIA LISTE PIECES DETACHEES TORCHE SPARE PARTS LIST TORCH ERSATZTEILLISTE SCLAUCHPAKET PIEZAS DE REPUESTO ANTORCHA	CODICE CODE KODE
16	Anello or Bague or Or ring Or ring Anillo or	722061
17	Pulsante Poussoir Pushbotton Druckknopf Pulsador	742042
18	Corpo torcia Corps torche Torch body Schlauchpaketteil Cuerpo de antorcha	722944
19	Kit 3 diffusori elettrodo d.1 Mm Kit 3 diffuseurs electrode d.1 Mm Kit 3 electrode diffusers d.1 Mm Kit 3 gasverteiler d.1 Mm Kit 3 difusores electrodo d.1 Mm	802249
19	Kit 3 diffusori elettrodo d.1,6 Mm Kit 3 diffuseurs electrode d.1,6 Mm Kit 3 electrode diffusers d.1,6 Mm Kit 3 gasverteiler d.1,6 Mm Kit 3 difusores electrodo d.1,6 Mm	802250
19	Kit 3 diffusori elettrodo d.2,4 Mm Kit 3 diffuseurs electrode d.2,4 Mm Kit 3 electrode diffusers d.2,4 Mm Kit 3 gasverteiler d.2,4 Mm Kit 3 difusores electrodo d.2,4 Mm	802251
19	Kit 3 diffusori elettrodo d.3,2 Mm Kit 3 diffuseurs electrode d.3,2 Mm Kit 3 electrode diffusers d.3,2 Mm Kit 3 gasverteiler d.3,2 Mm Kit 3 difusores electrodo d.3,2 Mm	802252
19	Kit 3 diffusori elettrodo d.4 Mm Kit 3 diffuseurs electrode d.4 Mm Kit 3 electrode diffusers d.4 Mm Kit 3 gasverteiler d.4 Mm Kit 3 difusores electrodo d.4 Mm	802253

ELENCO PEZZI DI RICAMBIO
LISTE PIECES DETACHEES
SPARE PARTS LIST
ERSATZTEILLISTE
PIEZAS DE REPUESTO

SUPERIOR TIG 311 DC-HF/LIFT VRD

TELWIN®

Esploso macchina, Dessin appareil, Machine drawing, Explosions Zeichnung des Geräts, Diseño seccionado maquina.



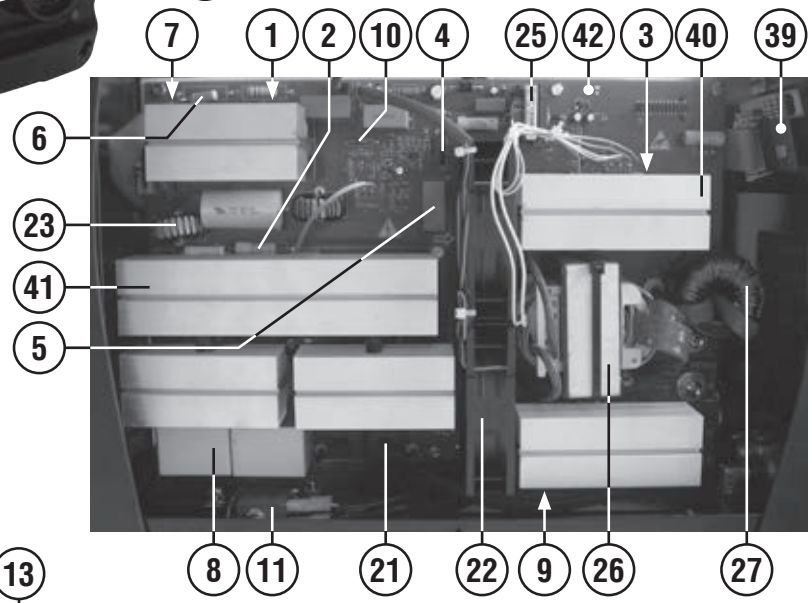

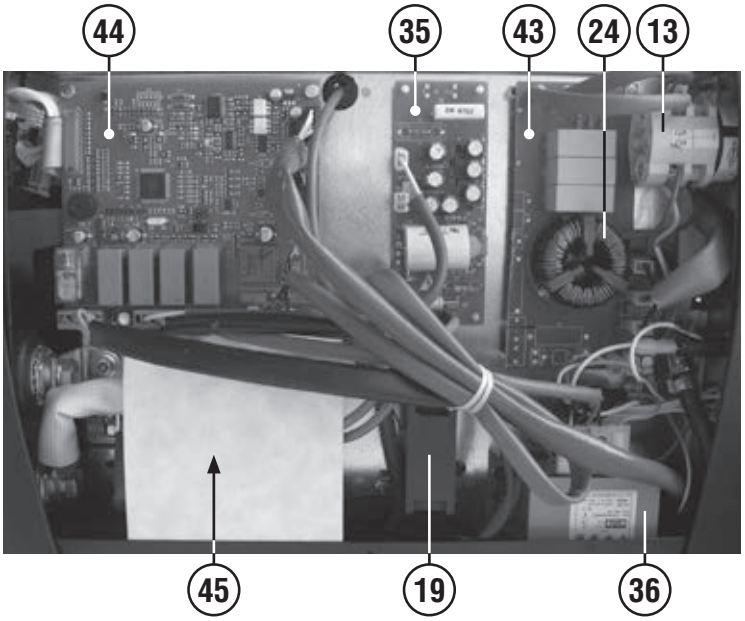

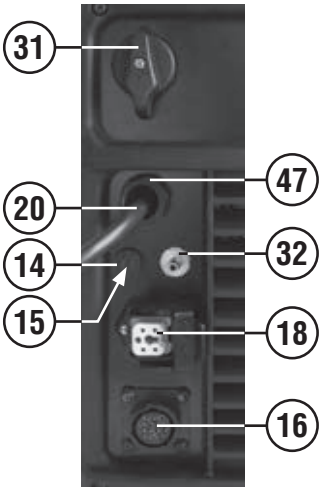

REF.	ELENCO PEZZI DI RICAMBIO PIECES DETACHEES SPARE PARTS LIST ERSATZTEILLISTE PIEZAS DE REPUESTO	CODICE CODE KODE
1	Ponte monofase Pont monophase Single phase bridge Einfasige brücke Puente monofasico	111017
2	Res. Met. 22r 5w 5% Res. Met. 22r 5w 5% Res. Met. 22r 5w 5% Res. Met. 22r 5w 5% Res. Met. 22r 5w 5%	111327
3	Res. Met. 10r 5w 5% Res. Met. 10r 5w 5% Res. Met. 10r 5w 5% Res. Met. 10r 5w 5% Res. Met. 10r 5w 5%	112374
4	Igbt Igbt Igbt Igbt Igbt	111094
5	Rele' Relais Relais Relais Relais	116320
6	Resistenza Resistance Resistance Widerstand Resistencia	116752
7	Varistore Varistor Varistor Varistor Varistor	116760
8	Condensatore Condensateur Condenser Kondensator Condensator	116882
9	Soppressore di tensione Soppresseur de tension Voltage suppressor Spannungssoppressor Sopresor de tension	116935
10	Res. Met. 10r 2w 5% fuse Res. Met. 10r 2w 5% fuse Res. Met. 10r 2w 5% fuse Res. Met. 10r 2w 5% fuse Res. Met. 10r 2w 5% fuse	116962
11	Elettrovalvola Electrovanne Electrovalve Elektroventil Electrovalvula	121800
12	Manopola per potenziometro Poignee pour potentiometre Potentiometer knob Potentiometergriff Manija por potenciometro	121547
13	Commutatore Commutateur Switch Schalter Switch	121556
14	Portafusibile Porte fusible Fuse holder Sicherungshalter Porta fusible	122159
15	Fusibile Fusible Fuse Sicherung Fusible	122432
16	Cablaggio controllo/c.A.D. Cable de controle/c.A.D. Control cable/c.A.D. Kontrolkabel/c.A.D. Cable de control/c.A.D.	124105
17	Cablaggio pulsante torcia Cable poussoir torche Torch button cable Brennerknopfskabel Cable pulsador antorcha	124864
18	Cablaggio gra Cable gra Cable gra Kabel gra Cable gra	124839
19	Cablaggio ventilatore Cable de ventilateur Fan cable Ventilatorskabel Cable de vendilador	124841
20	Cavo alim. 4g1.5 2 M Cable alim. 4g1.5 2 M Mains cable 4g1.5 2 M Netzkabel 4g1.5 2 M Cable alim. 4g1.5 2 M	132237
21	Trasformatore di corrente Transformateur de courant Current transformer Stromwandler Transformador de corriente	152230
22	Ventilatore Ventilateur Fan Ventilator Ventilador	152269
23	Induttanza Inductance Inductance Drossel Induccion	169746
24	Induttanza filtro Inductance filtre Filter inductor Filterdrossel Filtro induccion	169747
25	Trasfo flyback aux Trasfo flyback aux Trasfo flyback aux Trasfo flyback aux Trasfo flyback aux	169838
26	Trasformatore potenza Transformateur de puissance Power trafo Leistungstransformer Transformador de potencia	169842
27	Induttanza Inductance Inductance Drossel Induccion	169861
28	Frontale Partie frontal Front panel Geraetefront Frontal	321117
29	Retro Partie arriere Back panel Rueckseite Trasera	321118
30	Manico Poignee Handle Handgriff Manija	321119
31	Assieme manopola per commutatore Set poigne pour commutateur Switch knob set Umschaltergriff set Set manjia para conmutador	323101
32	Raccordo Raccord Pipe fitting Anschluss Empalme	602376
33	Presa atlas 50mmq Prise atlas 50mmq Atlas socket 50mmq Atlas steckdose 50mmq Enchufe atlas 50mmq	712036
34	Kit raccordo entrata gas Kit raccord entree gaz Gas pipe connector kit Gaseintrittkit Kit racor entrada gas	980548
35	Kit scheda hf Kit fiche hf Hf board kit Hf karte kit Kit tarjeta hf	981179
36	Kit autotrasfo Kit autotrasfo Autotrasfo kit Autotrasfo kit Kit autotrasfo	981278
37	Kit fondo Kit chassis Bottom kit Bodenteil kit Kit fondo	981408
38	Kit scheda keypad Kit module keypad Pcb kit keypad Steuerungskit keypad Kit tarjeta keypad	981436
39	Kit scheda pannello Kit platine frontal Kit front panel card Kit geraetefrontskarte Kit tarjeta frontal	981535
40	Kit diodi Kit diodes Diode kit Diode kit Kit diodo	981632
41	Kit igbt + trasformatore impulsi Kit igbt + transformateur d'impulsions Kit igbt + impulse transformer Kit igbt + impuls-transformator Kit igbt + transformador de impulsos	981633
42	Kit scheda potenza Kit platine puissance Power board kit Leistungskartekit Kit tarjeta de potencia	981677
43	Kit scheda filtro Kit platine filtre Filter card kit Filterkartekit Kit tarjeta filtro	981678
44	Kit scheda controllo Kit fiche de controle Control pcb kit Kontrollekarte kit Kit tarjeta de controlo	981679
45	Kit trasformatore hf Kit transformateur hf Hf transformer kit Hf transformator kit Kit transformador hf	981681
46	Kit mantello Kit capot Cover kit Deckelkit Kit panel de cobertura	981682
47	Kit pressacavo + ghiera Kit presse cable + embout Kit cable bushing + ring nut Kit kabelhalter + nutmutter Kit prensa cable + virola	990046

Schema elettrico, Schéma électrique, Diagram, Schaltplan, Esquema de conexiones.

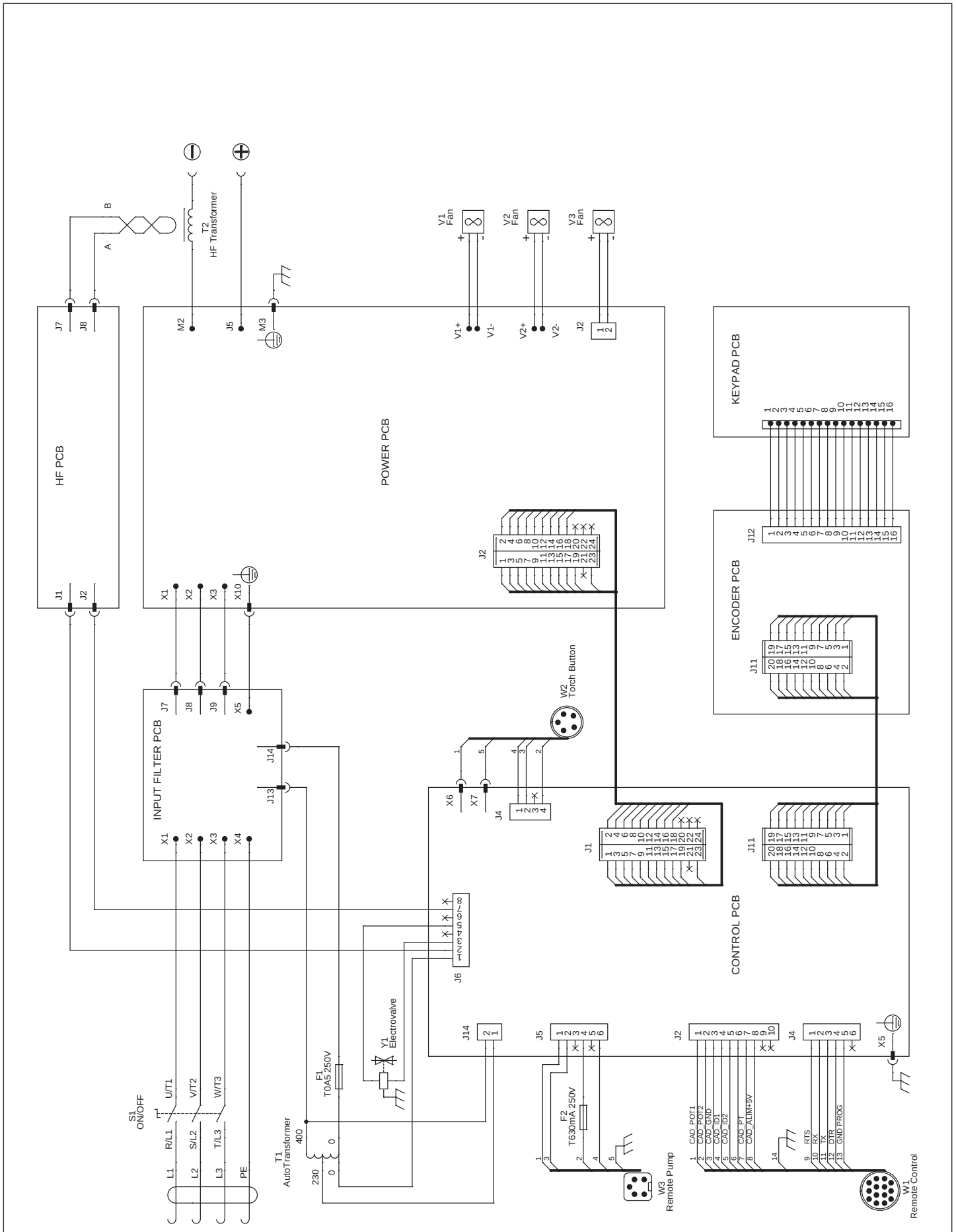

Esploso torcia, Dessin torche, Torch drawing, Schlauchpaket - Explosionszeichnung, Diseño seccionado antorcha.

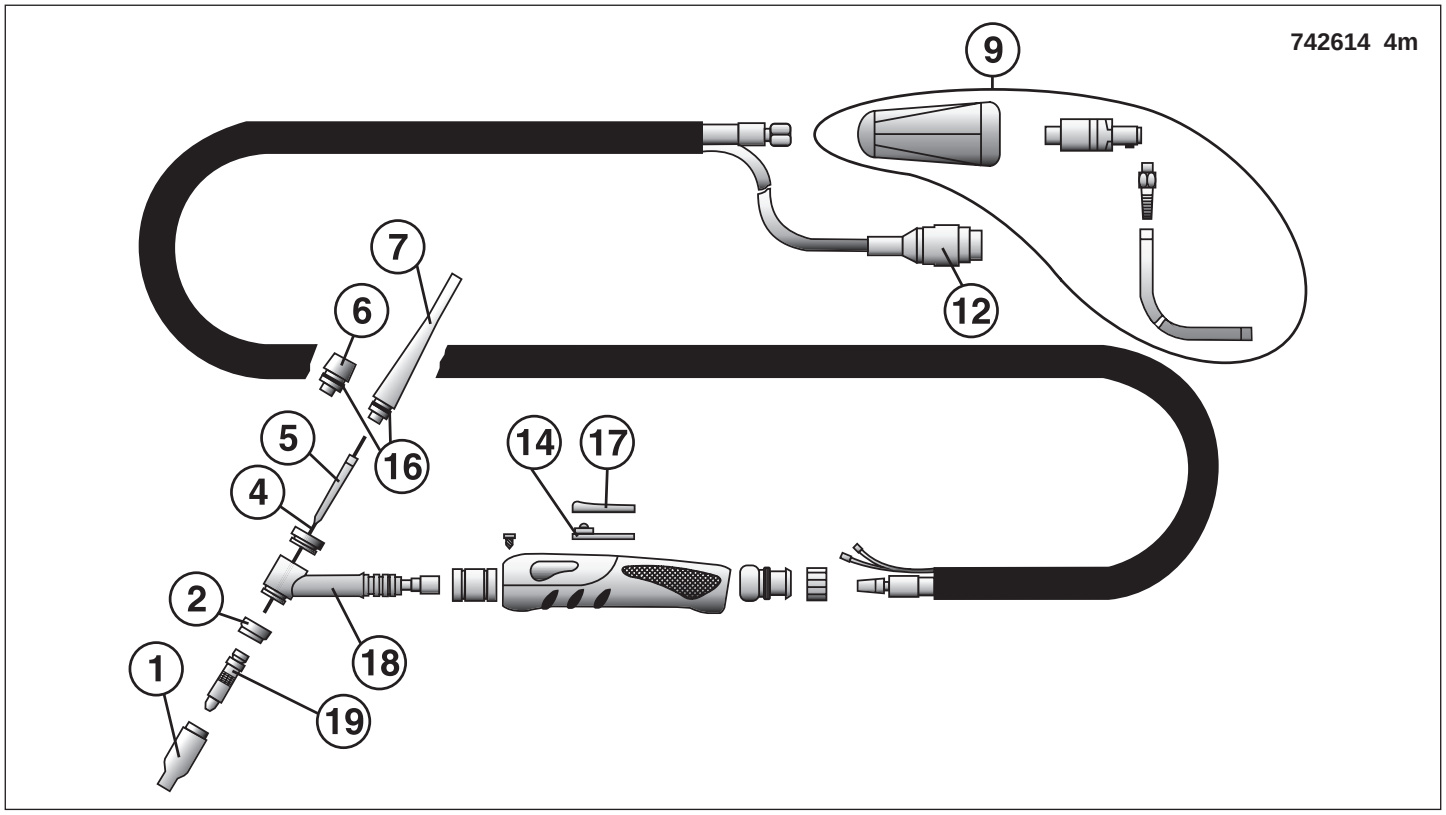

REF.	ELENCO PEZZI RICAMBIO TORCIA LISTE PIECES DETACHEES TORCHE SPARE PARTS LIST TORCH ERSATZTEILLISTE SCLAUCHPAKET PIEZAS DE REPUESTO ANTORCHA	CODICE CODE KODE
1	Kit 10 ugelli ceramici nr.10 Kit 10 buses ceramiques nr.10 Kit 10 ceramic nozzles nr.10 Kit 10 keramikdüsen nr.10 Kit 10 inyectores ceramicos nr.10	802248
1	Kit 10 ugelli ceramici nr.8 Kit 10 buses ceramiques nr.8 Kit 10 ceramic nozzles nr.8 Kit 10 keramikdüsen nr.8 Kit 10 inyectores ceramicos nr.8	802247
1	Kit 10 ugelli ceramici nr.7 Kit 10 buses ceramiques nr.7 Kit 10 ceramic nozzles nr.7 Kit 10 keramikdüsen nr.7 Kit 10 inyectores ceramicos nr.7	802246
1	Kit 10 ugelli ceramici nr.6 Kit 10 buses ceramiques nr.6 Kit 10 ceramic nozzles nr.6 Kit 10 keramikdüsen nr.6 Kit 10 inyectores ceramicos nr.6	802245
1	Kit 10 ugelli ceramici nr.4 Kit 10 buses ceramiques nr.4 Kit 10 ceramic nozzles nr.4 Kit 10 keramikdüsen nr.4 Kit 10 inyectores ceramicos nr.4	802244
2	Isolante Isolant Insulator Isolator Aislador	722248
4	Kit 10 elettr.Tungsteno puro d. 4 Mm Kit 10 electr.Tungstene pur d. 4 Mm Kit 10 pure tungsten electr. D. 4 Mm Kit 10 reinwolfram elektr. D. 4 Mm Kit 10 electr.Tungsteno puro d. 4 Mm	802238
4	Kit 10 elettr.Tungsteno puro d.3,2 Mm Kit 10 electr.Tungstene pur d.3,2 Mm Kit 10 pure tungsten electr. D.3,2 Mm Kit 10 reinwolfram elektr. D.3,2 Mm Kit 10 electr.Tungsteno puro d.3,2 Mm	802237
4	Kit 10 elettr.Tungsteno puro d.2,4 Mm Kit 10 electr.Tungstene pur d.2,4 Mm Kit 10 pure tungsten electr. D.2,4 Mm Kit 10 reinwolfram elektrm d.2,4 Mm Kit 10 electr.Tungsteno puro d.2,4 Mm	802236
4	Kit 10 elettr.Tungsteno puro d.1,6 Mm Kit 10 electr.Tungstene pur d.1,6 Mm Kit 10 pure tungsten electr. D.1,6 Mm Kit 10 reinwolfram elektr. D.1,6 Mm Kit 10 electr.Tungsteno puro d.1,6 Mm	802235
4	Kit 10 elettr.Tungsteno ceriato d.3,2 Mm Kit 10 electr.Tungstene-cerium d.3,2 Mm Kit 10 cerium-tungsten electr. D.3,2 Mm Kit 10 wolfram-zerium elektr. D.3,2 Mm Kit 10 electr.Tungsteno cerio d.3,2 Mm	802233
4	Kit 10 elettr.Tungsteno ceriato d.2,4 Mm Kit 10 electr.Tungstene-cerium d.2,4 Mm Kit 10 cerium-tungsten electr. D.2,4 Mm Kit 10 wolfram-zerium elektr. D.2,4 Mm Kit 10 electr.Tungsteno cerio d.2,4 Mm	802232

REF.	ELENCO PEZZI RICAMBIO TORCIA LISTE PIECES DETACHEES TORCHE SPARE PARTS LIST TORCH ERSATZTEILLISTE SCLAUCHPAKET PIEZAS DE REPUESTO ANTORCHA	CODICE CODE KODE
4	Kit 10 elettr.Tungsteno ceriato d.1,6 Mm Kit 10 electr.Tungstene-cerium d.1,6 Mm Kit 10 cerium-tungsten electr. D.1,6 Mm Kit 10 wolfram-zerium elektr. D.1,6 Mm Kit 10 electr.Tungsteno cerio d.1,6 Mm	802222
4	Kit 10 elettr.Tungsteno ceriato d.1 Mm Kit 10 electr.Tungstene-cerium d.1 Mm Kit 10 cerium-tungsten electr. D.1 Mm Kit 10 wolfram-zerium elektr. D.1 Mm Kit 10 electr.Tungsteno cerio d.1 Mm	802220
5	Kit 3 pinze serra elettrodo d.1,0 Mm Kit 3 pinces porte-electrode d.1,0 Mm Kit 3 electrode holder clamps d.1,0 Mm Kit 3 elektrodenhalterzangen d.1,0 Mm Kit 3 pinzas porta electrodo d.1,0 Mm	802239
5	Kit 3 pinze serra elettrodo d.1,6 Mm Kit 3 pinces porte-electrode d.1,6 Mm Kit 3 electrode holder clamps d.1,6 Mm Kit 3 elektrodenhalterzangen d.1,6 Mm Kit 3 pinzas porta electrodo d.1,6 Mm	802240
5	Kit 3 pinze serra elettrodo d.2,4 Mm Kit 3 pinces porte-electrode d.2,4 Mm Kit 3 electrode holder clamps d.2,4 Mm Kit 3 elektrodenhalterzangen d.2,4 Mm Kit 3 pinzas porta electrodo d.2,4 Mm	802241
5	Kit 3 pinze serra elettrodo d.3,2 Mm Kit 3 pinces porte-electrode d.3,2 Mm Kit 3 electrode holder clamps d.3,2 Mm Kit 3 elektrodenhalterzangen d.3,2 Mm Kit 3 pinzas porta electrodo d.3,2 Mm	802242
5	Kit 3 pinze serra elettrodo d.4 Mm Kit 3 pinces porte-electrode d.4 Mm Kit 3 electrode holder clamps d.4 Mm Kit 3 elektrodenhalterzangen d.4 Mm Kit 3 pinzas porta electrodo d.4 Mm	802243
6	Cappuccio corto st17-26 Capuchon petit st17-26 Short cap st17-26 Kurze kappe st17-26 Capuchon corto st17-26	722192
7	Cappuccio lungo st17-26 Capuchon long Long cap Lange kappe Capuchon largo	722193
9	Kit attacco atlas 50mmq Kit embout atlas 50mmq Atlas 50mmq connection kit Atlas 50mmq anschluss kit Kit conexion atlas 50mmq	981443
12	Spina 5p Fiche 5p 5p plug 5p stecker Espina 5p	742599
14	Contatto pulsante Contact poussoir Pushbotton contact Druckknopfkontakt Contacto pulsador	452089

REF.	ELENCO PEZZI RICAMBIO TORCIA LISTE PIECES DETACHEES TORCHE SPARE PARTS LIST TORCH ERSATZTEILLISTE SCLAUCHPAKET PIEZAS DE REPUESTO ANTORCHA	CODICE CODE KODE
16	Anello or Bague or Or ring Or ring Anillo or	722061
17	Pulsante Poussoir Pushbotton Druckknopf Pulsador	742042
18	Corpo torcia Corps torche Torch body Schlauchpaketteil Cuerpo de antorcha	722944
19	Kit 3 diffusori elettrodo d.1 Mm Kit 3 diffuseurs electrode d.1 Mm Kit 3 electrode diffusers d.1 Mm Kit 3 gasverteiler d.1 Mm Kit 3 difusores electrodo d.1 Mm	802249
19	Kit 3 diffusori elettrodo d.1,6 Mm Kit 3 diffuseurs electrode d.1,6 Mm Kit 3 electrode diffusers d.1,6 Mm Kit 3 gasverteiler d.1,6 Mm Kit 3 difusores electrodo d.1,6 Mm	802250
19	Kit 3 diffusori elettrodo d.2,4 Mm Kit 3 diffuseurs electrode d.2,4 Mm Kit 3 electrode diffusers d.2,4 Mm Kit 3 gasverteiler d.2,4 Mm Kit 3 difusores electrodo d.2,4 Mm	802251
19	Kit 3 diffusori elettrodo d.3,2 Mm Kit 3 diffuseurs electrode d.3,2 Mm Kit 3 electrode diffusers d.3,2 Mm Kit 3 gasverteiler d.3,2 Mm Kit 3 difusores electrodo d.3,2 Mm	802252
19	Kit 3 diffusori elettrodo d.4 Mm Kit 3 diffuseurs electrode d.4 Mm Kit 3 electrode diffusers d.4 Mm Kit 3 gasverteiler d.4 Mm Kit 3 difusores electrodo d.4 Mm	802253

ELENCO PEZZI DI RICAMBIO
LISTE PIECES DETACHEES
SPARE PARTS LIST
ERSATZTEILLISTE
PIEZAS DE REPUESTO

G.R.A. 4500

TELWIN®

Esploso macchina, Dessin appareil, Machine drawing, Explosions Zeichnung des Geräts, Diseño seccionado maquina.

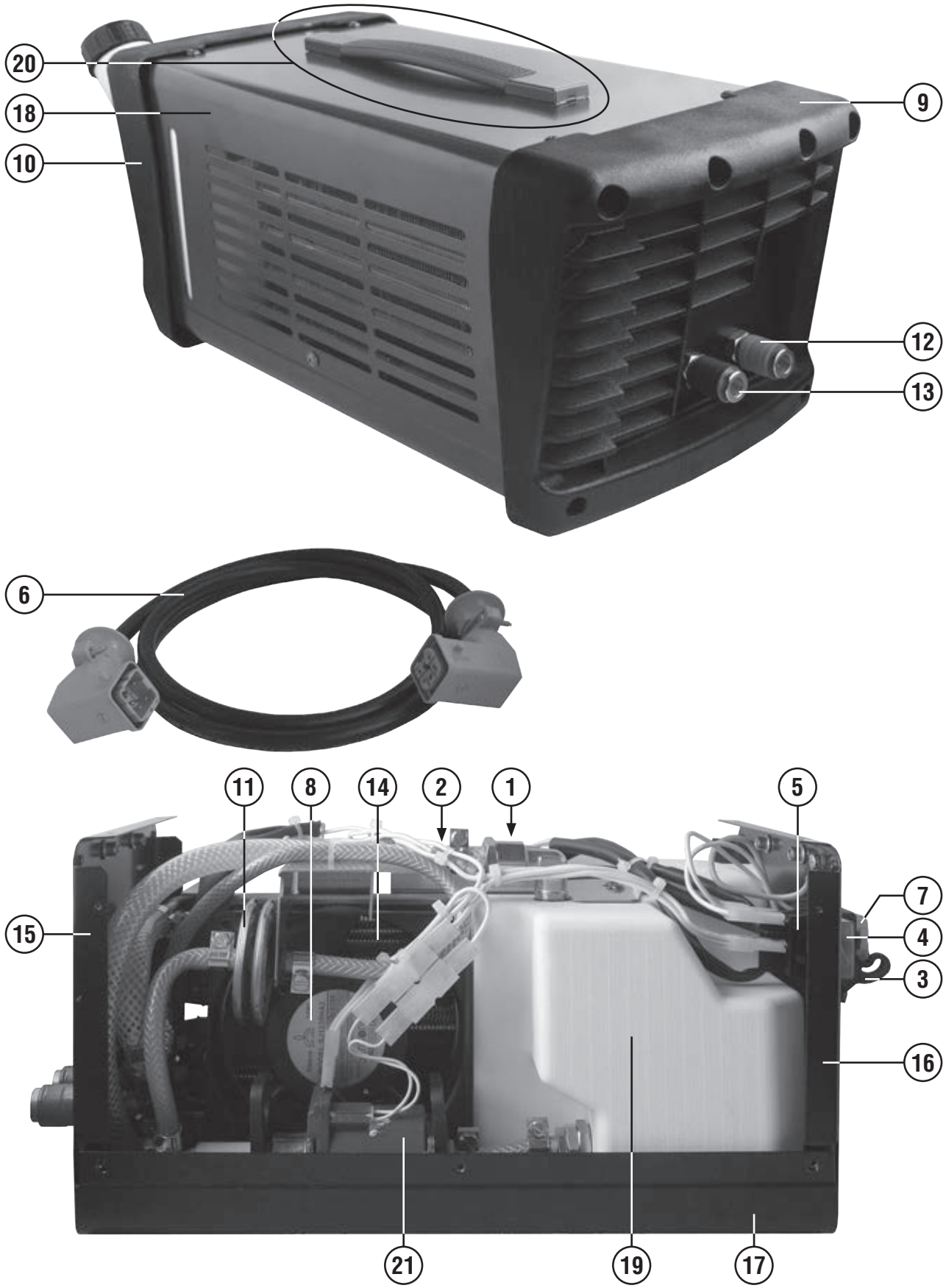

REF.	ELENCO PEZZI DI RICAMBIO PIECES DETACHEES SPARE PARTS LIST ERSATZTEILLISTE PIEZAS DE REPUESTO	CODICE CODE KODE
1	Base Base Basis Basis Base	112482
2	Rele' Relais Relais Relais Relais	116154
3	Custodia Garde Guard Schutz Proteccion	121566
4	Copri interruttore Couvre interrupteur Switch cover Schalterdeckel Cubre interruptor	122353
5	Interruttore Interrupteur Switch Schalter Interruptor	122381
6	Cavo alimentazione da generatore Cable alimentation du generateur Mains cable from power source Netzkabel von stromquelle Cable alimentador de generador	124124
7	Cablaggio connettore Cable connecteur Connector cable Anschlusskabel Cable conectador	124347
8	Ventilatore Ventilateur Fan Ventilator Ventilador	152101
9	Cornice frontale gra Cadre partie frontal gra Gra front panel frame Gra geraetefrontrahmen Marco del frontal gra	321175
10	Cornice retro gra Cadre partie arriere gra Gra back side frame Gra rueckseiterahmen Marco trasera gra	321176
11	Polmone antivibrazione Poumon d'antivibration Antivibration lung Antivibrationlungenfluegel Pulmon de antivibration	602145
12	Attacco rapido rosso Embout rapide rouge Quick connection red Schnellanschluss rot Enchufe roja	602296
13	Attacco rapido blu Embout rapide blue Quick connection blue Schnellanschluss blau Enchufe blue	602297
14	Radiatore gra Radiateur gra Gra radiator Gra radiator Radiator gra	602312
15	Frontale Partie frontal Front panel Geraetefront Frontal	642374
16	Retro Partie arriere Back panel Ruecksеite Trasera	642375
17	Fondo Chassis Bottom Bodenteil Fondo	645615
18	Mantello Capot Cover Deckel Panel de cobertura	651200
19	Kit serbatoio Kit reservoir Tank kit Behaelter kit Kit tanque	981519
20	Kit maniglia Kit poignee Kit handle Kit handgriff Kit manija	990398
21	Elettropompa Electropompe Electropump Elektropumpe Electrobomba	981520

Schema elettrico, Schéma électrique, Diagram, Schaltplan, Esquema de conexiones.

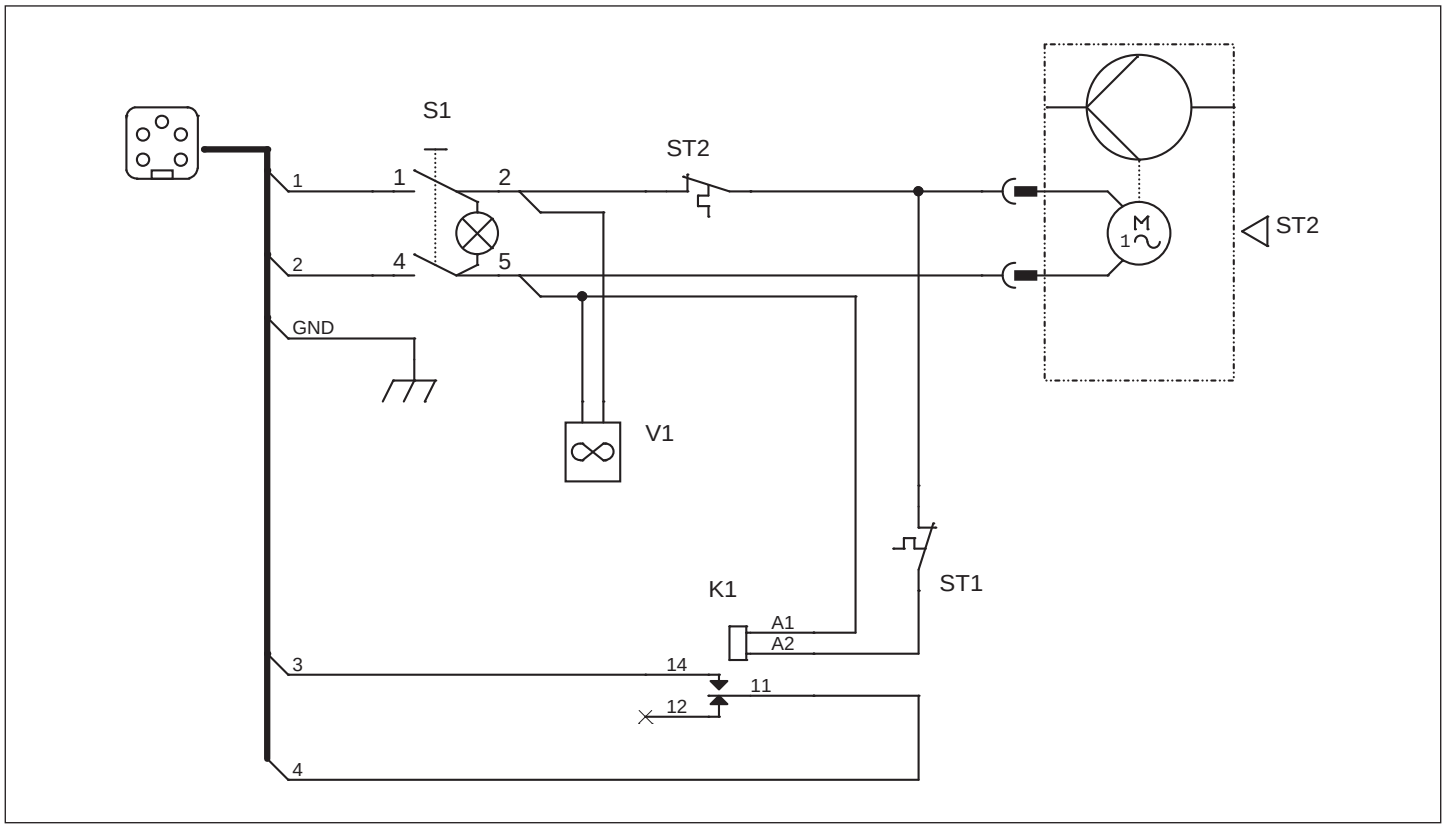

ELENCO PEZZI DI RICAMBIO
LISTE PIECES DETACHEES
SPARE PARTS LIST
ERSATZTEILLISTE
PIEZAS DE REPUESTO

SUPERIOR TIG 322 AC/DC-HF/LIFT

TELWIN

Esploso macchina, Dessin appareil, Machine drawing, Explosions Zeichnung des Geräts, Diseño seccionado maquina.

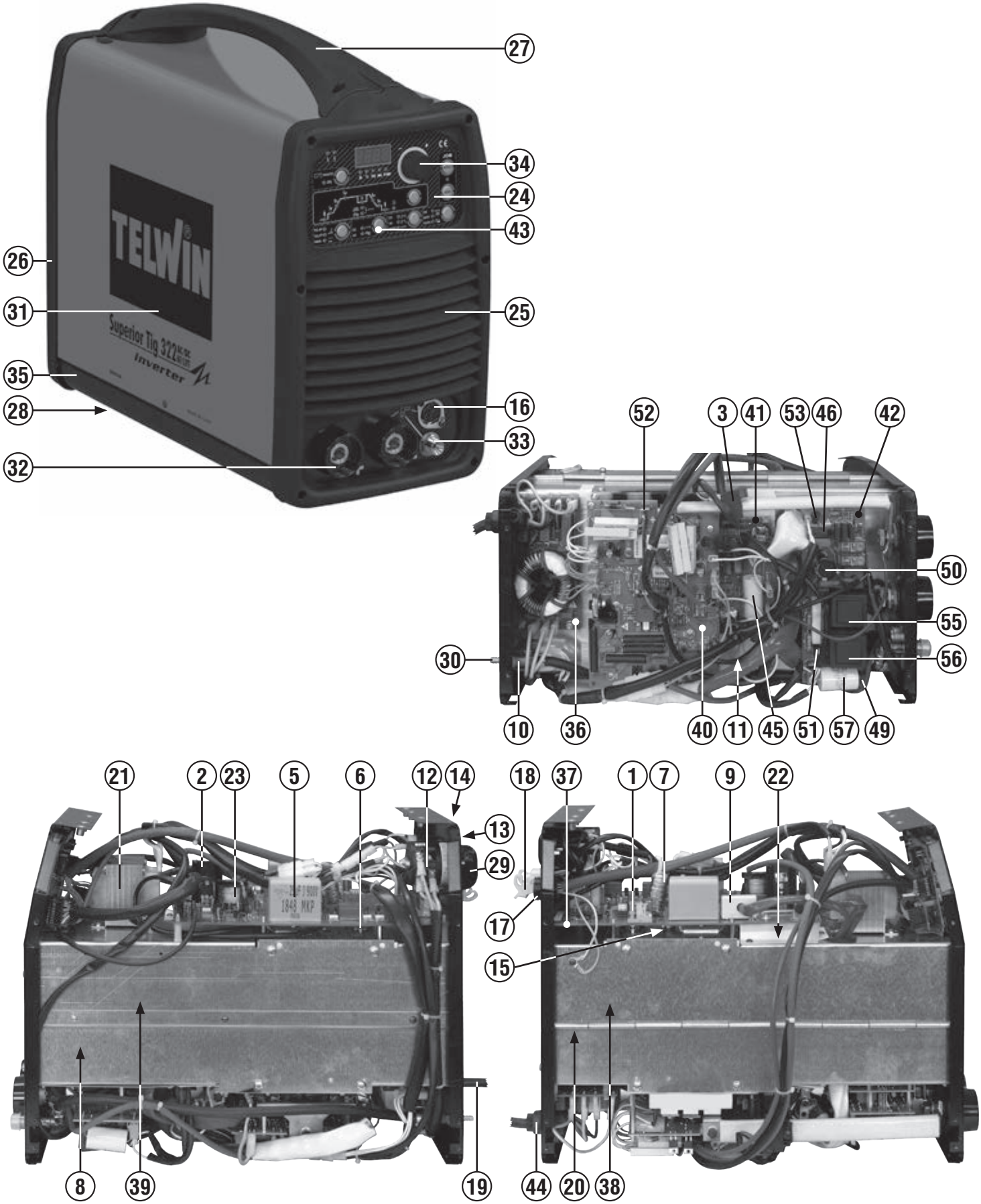

REF.	ELENCO PEZZI DI RICAMBIO PIECES DETACHEES SPARE PARTS LIST ERSATZTEILLISTE PIEZAS DE REPUESTO	CODICE CODE KODE
1	Rele' Relais Relais Relais Relais	113233
2	Igbt Igbt Igbt Igbt Igbt	113603
3	Sensore di hall Sensor hall Hall sensor Hall sensor Sensor de hall	112381
5	Condensatore Condensateur Condenser Kondensator Condensator	116740
6	Ponte Pont Bridge Brücke Puente	111465
7	Induttanza Inductance Inductance Drossel Induccion	116747
8	Resistenza Resistance Resistance Widerstand Resistencia	116759
9	Sensore hall Capteur hall Sensor hall Messfuhler hall Sensor hall	116836
10	Elettrovalvola Electrovanne Electrovalve Elektroventil Electrovalvula	121800
11	Termostato Thermostat Thermal switch Thermostat Termostato	121481
12	Commutatore Commutateur Switch Schalter Conmutador	122017
13	Portafusibile Porte fusible Fuse holder Sicherungshalter Porta fusible	122159
14	Fusibile Fusible Fuse Sicherung Fusible	122437
15	Termostato Thermostat Thermostat Thermostat Termostato	121325
16	Presa 5 poli Prise 5 pins Socket 5 pins Steckdose 5 pins Tomacorriente 5 pins	121587
17	Cablaggio controllo Cable de controle Control cable Kontrolkabel Cable de control	125099
18	Cablaggio g.R.A. Cable g.R.A. G.R.A.Cable G.R.A.Kabel Cable g.R.A.	124324
19	Cavo alim. 4g2.5 2 M Cable alim. 4g2.5 2 M Mains cable 4g2.5 2 M Netzkabel 4g2.5 2 M Cable alim. 4g2.5 2 M	132026
20	Ventilatore Ventilateur Fan Ventilator Ventilador	152000
21	Trasformatore ausiliario Transformateur auxiliaire Auxiliary transformer Zusatzlich transformator Transformador auxiliar	990987
22	Induttanza Inductance Inductance Drossel Induccion	169550
23	Trasformatore Transformateur complet Transformateur complet Trafo Transformateur complet	169627
24	Pannello frontale Panneau partie frontal Front panel Geraetefront Panel frontal	314357
25	Frontale Partie frontal Front panel Geraetefront Frontal	322881
26	Retro Partie arriere Back panel Rueckseite Trasera	322882
27	Manico Poignee Handle Handgriff Manija	322883
28	Piedino Embout Foot Fuss Pie	323001
29	Assieme manopola per commutatore Set poigne pour commutateur Switch knob set Umschaltergriff set Set manjia para conmutador	323101
30	Raccordo Raccord Pipe fitting Anschluss Empalme	602376
31	Mantello Capot Cover Deckel Panel de cobertura	656031
32	Presa atlas 50mmq Prise atlas 50mmq Atlas socket 50mmq Atlas steckdose 50mmq Enchufe atlas 50mmq	712036
33	Kit raccordo entrata gas Kit raccord entree gaz Gas pipe connector kit Gaseintrittkit Kit racor entrada gas	980548
34	Kit manopola nera Kit poignee noir Black knob kit Schwarze griff kit Kit manija negra	980772
35	Kit fondo Kit chassis Bottom kit Bodenteil kit Kit fondo	980817
36	Kit scheda filtro ingresso Kit platine filtre input Input filter card kit Input filterkarte kit Kit tarjeta filtro input	981521
37	Kit scheda primario Kit fiche primaire Primary pcb kit Primaertrafokarte kit Kit tarjeta primario	981081
38	Kit trasformatore hf Kit trasformateur hf Hf transformer kit Hf trafokit Kit transformador hf	981082
39	Kit trasformatore potenza Kit transformateur puissance Power transformer kit Leistungstransformatorkit Kit transformador de potencia	981083
40	Kit scheda secondario Kit fiche secondaire Secundary pcb kit Sekundärtrafokarte kit Kit tarjeta secundario	982192
41	Kit scheda induttanza Kit fiche inductance Inductance card kit Drosselskarte kit Kit tarjeta induccion	981085
42	Kit scheda hf/survolt. Kit fiche hf/survolt. Hf/survolt. Board kit Hf/survolt. Karte kit Kit tarjeta hf/survolt.	981053
43	Kit pannello + scheda Kit panneau + module Panel + card kit Tafel + karte kit Kit panel + tarjeta	982036
44	Kit pressacavo Kit presse cable Cable bushing kit Kabelhalter kit Kit prensa cable	990439
45	Condensatore Condensateur Condenser Kondensator Condensator	112828
46	Raddrizzatore monofase Redresseur monophase Single-phase rectifier Einphasiger gleichrichter Rectificador monofasico	112949
49	Diodo Diode Diode Diode Diodo	111092
50	Condensatore Condensateur Condenser Kondensator Condensator	116967
51	Diodo Diode Diode Diode Diodo	116325
52	Diodo Diode Diode Diode Diodo	116442
53	Resistenza Resistance Resistance Widerstand Resistencia	116465
55	Induttanza Inductance Inductance Drossel Induccion	116821
56	Trasformatore x survoltore Transformateur x survoltore Transformer x survoltor Trafo x survoltor Transformador x survoltore	116937
57	Condensatore Condensateur Condenser Kondensator Condensator	116940

Schema elettrico, Schéma électrique, Diagram, Schaltplan, Esquema de conexiones.

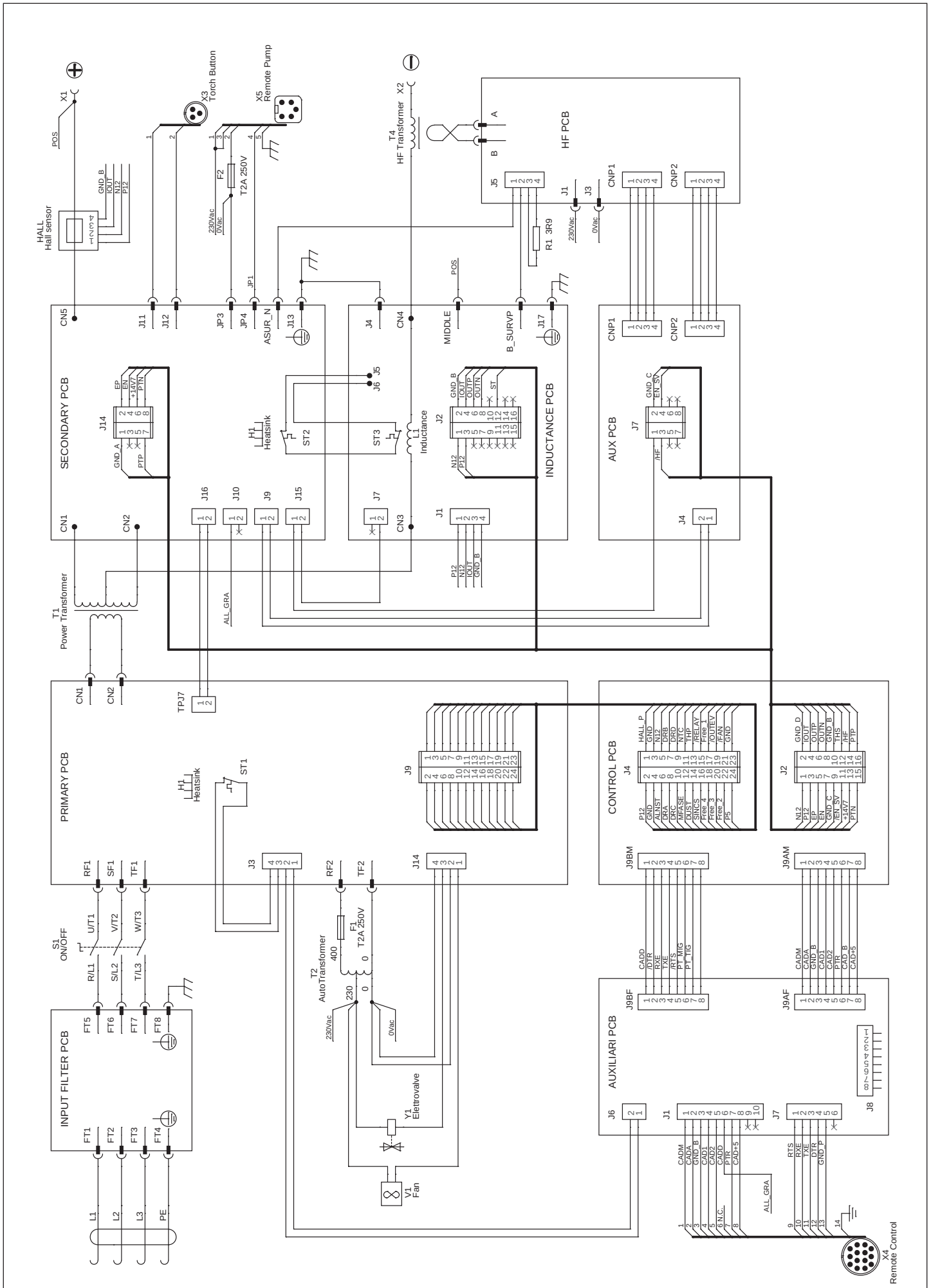

Esploso torcia, Dessin torche, Torch drawing, Schlauchpaket - Explosionszeichnung, Diseño seccionado antorcha.

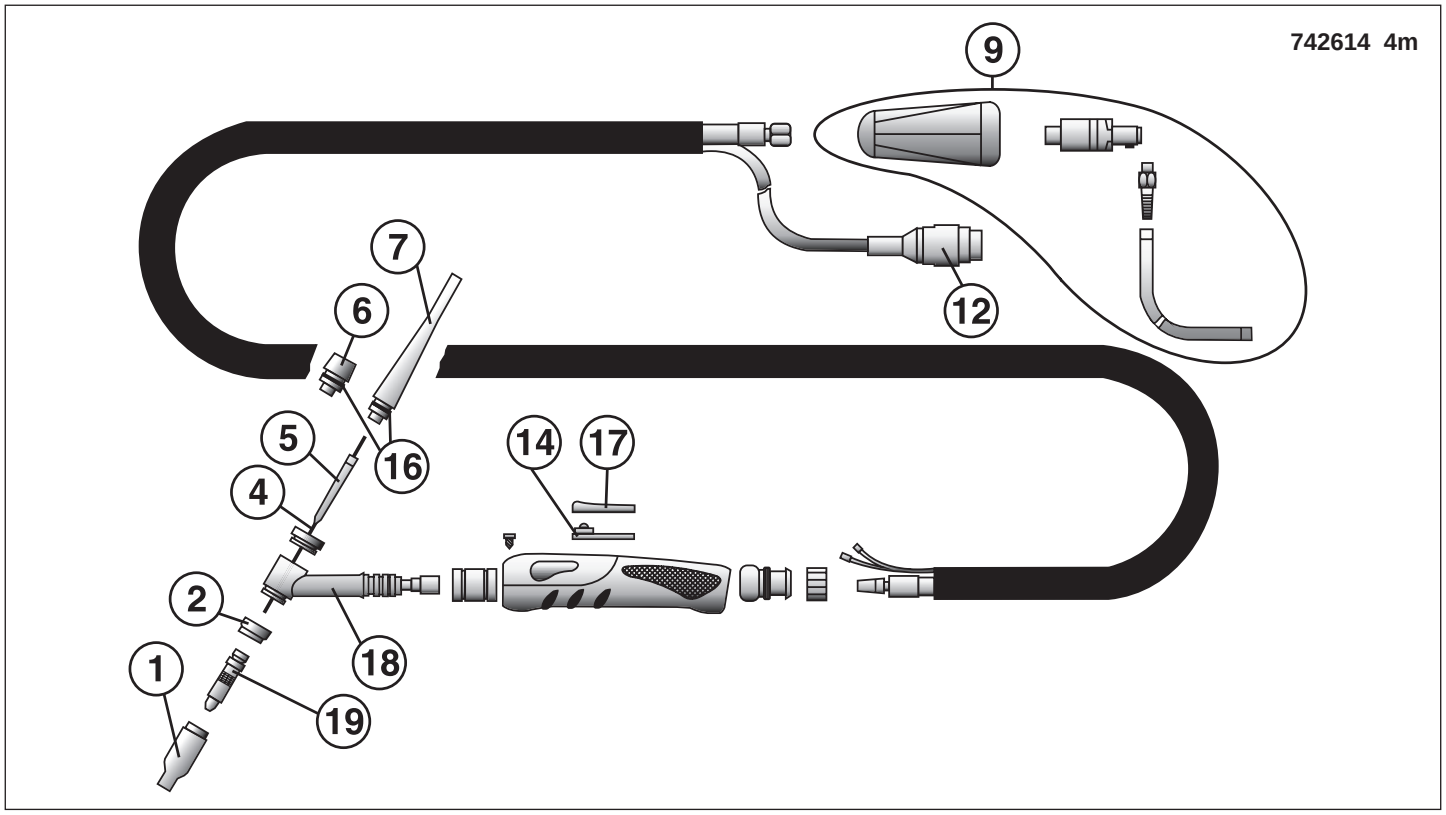

REF.	ELENCO PEZZI RICAMBIO TORCIA LISTE PIECES DETACHEES TORCHE SPARE PARTS LIST TORCH ERSATZTEILLISTE SCLAUCHPAKET PIEZAS DE REPUESTO ANTORCHA	CODICE CODE KODE
1	Kit 10 ugelli ceramici nr.10 Kit 10 buses ceramiques nr.10 Kit 10 ceramic nozzles nr.10 Kit 10 keramikdüsen nr.10 Kit 10 inyectores ceramicos nr.10	802248
1	Kit 10 ugelli ceramici nr.8 Kit 10 buses ceramiques nr.8 Kit 10 ceramic nozzles nr.8 Kit 10 keramikdüsen nr.8 Kit 10 inyectores ceramicos nr.8	802247
1	Kit 10 ugelli ceramici nr.7 Kit 10 buses ceramiques nr.7 Kit 10 ceramic nozzles nr.7 Kit 10 keramikdüsen nr.7 Kit 10 inyectores ceramicos nr.7	802246
1	Kit 10 ugelli ceramici nr.6 Kit 10 buses ceramiques nr.6 Kit 10 ceramic nozzles nr.6 Kit 10 keramikdüsen nr.6 Kit 10 inyectores ceramicos nr.6	802245
1	Kit 10 ugelli ceramici nr.4 Kit 10 buses ceramiques nr.4 Kit 10 ceramic nozzles nr.4 Kit 10 keramikdüsen nr.4 Kit 10 inyectores ceramicos nr.4	802244
2	Isolante Isolant Insulator Isolator Aislador	722248
4	Kit 10 elettr.Tungsteno puro d. 4 Mm Kit 10 electr.Tungstene pur d. 4 Mm Kit 10 pure tungsten electr. D. 4 Mm Kit 10 reinwolfram elektr. D. 4 Mm Kit 10 electr.Tungsteno puro d. 4 Mm	802238
4	Kit 10 elettr.Tungsteno puro d.3,2 Mm Kit 10 electr.Tungstene pur d.3,2 Mm Kit 10 pure tungsten electr. D.3,2 Mm Kit 10 reinwolfram elektr. D.3,2 Mm Kit 10 electr.Tungsteno puro d.3,2 Mm	802237
4	Kit 10 elettr.Tungsteno puro d.2,4 Mm Kit 10 electr.Tungstene pur d.2,4 Mm Kit 10 pure tungsten electr. D.2,4 Mm Kit 10 reinwolfram elektrm d.2,4 Mm Kit 10 electr.Tungsteno puro d.2,4 Mm	802236
4	Kit 10 elettr.Tungsteno puro d.1,6 Mm Kit 10 electr.Tungstene pur d.1,6 Mm Kit 10 pure tungsten electr. D.1,6 Mm Kit 10 reinwolfram elektr. D.1,6 Mm Kit 10 electr.Tungsteno puro d.1,6 Mm	802235
4	Kit 10 elettr.Tungsteno ceriato d.3,2 Mm Kit 10 electr.Tungstene-cerium d.3,2 Mm Kit 10 cerium-tungsten electr. D.3,2 Mm Kit 10 wolfram-zerium elektr. D.3,2 Mm Kit 10 electr.Tungsteno cerio d.3,2 Mm	802233
4	Kit 10 elettr.Tungsteno ceriato d.2,4 Mm Kit 10 electr.Tungstene-cerium d.2,4 Mm Kit 10 cerium-tungsten electr. D.2,4 Mm Kit 10 wolfram-zerium elektr. D.2,4 Mm Kit 10 electr.Tungsteno cerio d.2,4 Mm	802232

REF.	ELENCO PEZZI RICAMBIO TORCIA LISTE PIECES DETACHEES TORCHE SPARE PARTS LIST TORCH ERSATZTEILLISTE SCLAUCHPAKET PIEZAS DE REPUESTO ANTORCHA	CODICE CODE KODE
4	Kit 10 elettr.Tungsteno ceriato d.1,6 Mm Kit 10 electr.Tungstene-cerium d.1,6 Mm Kit 10 cerium-tungsten electr. D.1,6 Mm Kit 10 wolfram-zerium elektr. D.1,6 Mm Kit 10 electr.Tungsteno cerio d.1,6 Mm	802222
4	Kit 10 elettr.Tungsteno ceriato d.1 Mm Kit 10 electr.Tungstene-cerium d.1 Mm Kit 10 cerium-tungsten electr. D.1 Mm Kit 10 wolfram-zerium elektr. D.1 Mm Kit 10 electr.Tungsteno cerio d.1 Mm	802220
5	Kit 3 pinze serra elettrodo d.1,0 Mm Kit 3 pinces porte-electrode d.1,0 Mm Kit 3 electrode holder clamps d.1,0 Mm Kit 3 elektrodenhalterzangen d.1,0 Mm Kit 3 pinzas porta electrodo d.1,0 Mm	802239
5	Kit 3 pinze serra elettrodo d.1,6 Mm Kit 3 pinces porte-electrode d.1,6 Mm Kit 3 electrode holder clamps d.1,6 Mm Kit 3 elektrodenhalterzangen d.1,6 Mm Kit 3 pinzas porta electrodo d.1,6 Mm	802240
5	Kit 3 pinze serra elettrodo d.2,4 Mm Kit 3 pinces porte-electrode d.2,4 Mm Kit 3 electrode holder clamps d.2,4 Mm Kit 3 elektrodenhalterzangen d.2,4 Mm Kit 3 pinzas porta electrodo d.2,4 Mm	802241
5	Kit 3 pinze serra elettrodo d.3,2 Mm Kit 3 pinces porte-electrode d.3,2 Mm Kit 3 electrode holder clamps d.3,2 Mm Kit 3 elektrodenhalterzangen d.3,2 Mm Kit 3 pinzas porta electrodo d.3,2 Mm	802242
5	Kit 3 pinze serra elettrodo d.4 Mm Kit 3 pinces porte-electrode d.4 Mm Kit 3 electrode holder clamps d.4 Mm Kit 3 elektrodenhalterzangen d.4 Mm Kit 3 pinzas porta electrodo d.4 Mm	802243
6	Cappuccio corto st17-26 Capuchon petit st17-26 Short cap st17-26 Kurze kappe st17-26 Capuchon corto st17-26	722192
7	Cappuccio lungo st17-26 Capuchon long Long cap Lange kappe Capuchon largo	722193
9	Kit attacco atlas 50mmq Kit embout atlas 50mmq Atlas 50mmq connection kit Atlas 50mmq anschluss kit Kit conexion atlas 50mmq	981443
12	Spina 5p Fiche 5p 5p plug 5p stecker Espina 5p	742599
14	Contatto pulsante Contact poussoir Pushbotton contact Druckknopfkontakt Contacto pulsador	452089

REF.	ELENCO PEZZI RICAMBIO TORCIA LISTE PIECES DETACHEES TORCHE SPARE PARTS LIST TORCH ERSATZTEILLISTE SCLAUCHPAKET PIEZAS DE REPUESTO ANTORCHA	CODICE CODE KODE
16	Anello or Bague or Or ring Or ring Anillo or	722061
17	Pulsante Poussoir Pushbotton Druckknopf Pulsador	742042
18	Corpo torcia Corps torche Torch body Schlauchpaketteil Cuerpo de antorcha	722944
19	Kit 3 diffusori elettrodo d.1 Mm Kit 3 diffuseurs electrode d.1 Mm Kit 3 electrode diffusers d.1 Mm Kit 3 gasverteiler d.1 Mm Kit 3 difusores electrodo d.1 Mm	802249
19	Kit 3 diffusori elettrodo d.1,6 Mm Kit 3 diffuseurs electrode d.1,6 Mm Kit 3 electrode diffusers d.1,6 Mm Kit 3 gasverteiler d.1,6 Mm Kit 3 difusores electrodo d.1,6 Mm	802250
19	Kit 3 diffusori elettrodo d.2,4 Mm Kit 3 diffuseurs electrode d.2,4 Mm Kit 3 electrode diffusers d.2,4 Mm Kit 3 gasverteiler d.2,4 Mm Kit 3 difusores electrodo d.2,4 Mm	802251
19	Kit 3 diffusori elettrodo d.3,2 Mm Kit 3 diffuseurs electrode d.3,2 Mm Kit 3 electrode diffusers d.3,2 Mm Kit 3 gasverteiler d.3,2 Mm Kit 3 difusores electrodo d.3,2 Mm	802252
19	Kit 3 diffusori elettrodo d.4 Mm Kit 3 diffuseurs electrode d.4 Mm Kit 3 electrode diffusers d.4 Mm Kit 3 gasverteiler d.4 Mm Kit 3 difusores electrodo d.4 Mm	802253

ELENCO PEZZI DI RICAMBIO
LISTE PIECES DETACHEES
SPARE PARTS LIST
ERSATZTEILLISTE
PIEZAS DE REPUESTO

SUPERIOR TIG 421 DC-HF/LIFT

Esploso macchina, Dessin appareil, Machine drawing, Explosions Zeichnung des Geräts, Diseño seccionado maquina.

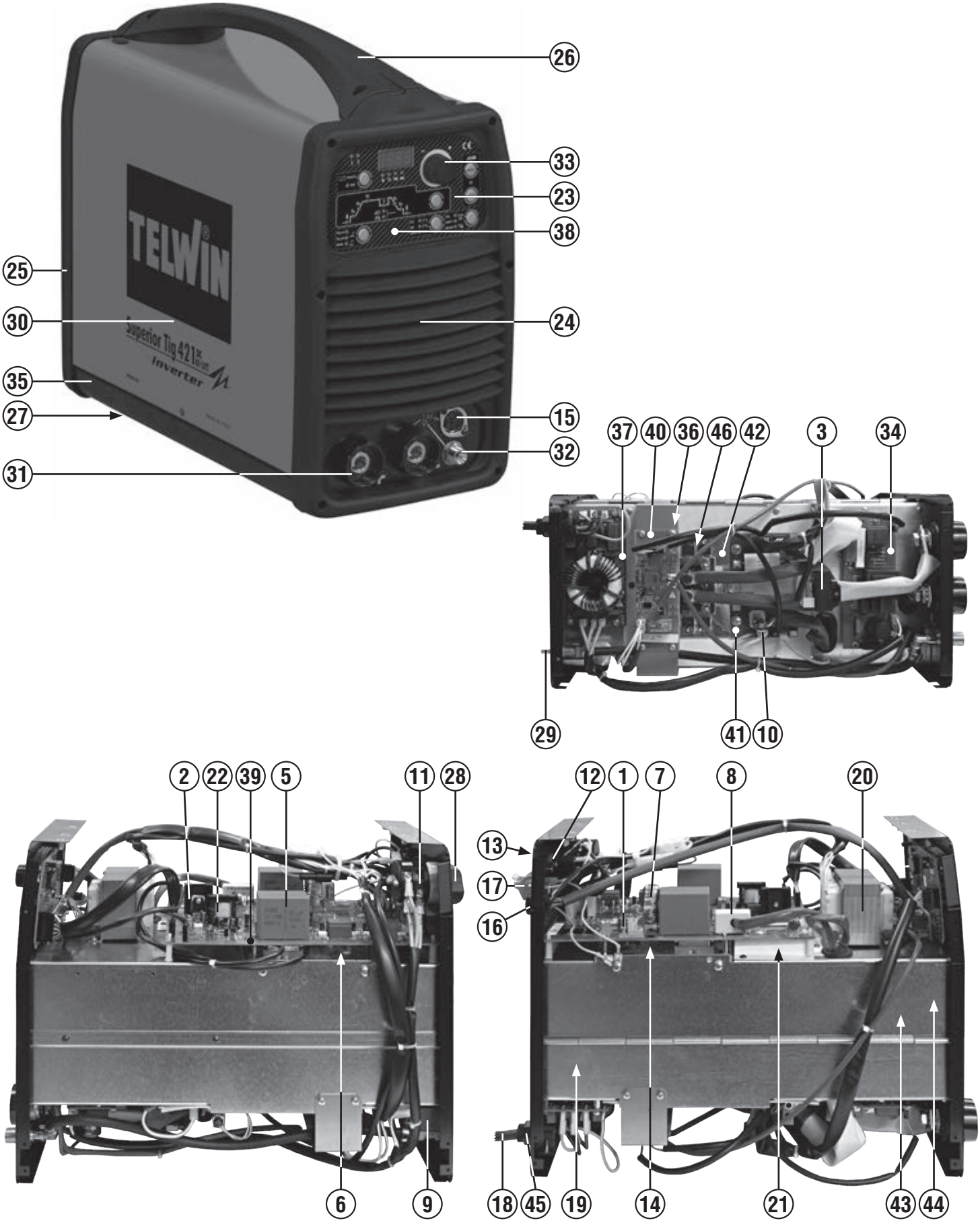

REF.	ELENCO PEZZI DI RICAMBIO PIECES DETACHEES SPARE PARTS LIST ERSATZTEILLISTE PIEZAS DE REPUESTO	CODICE CODE KODE
1	Rele' Relais Relais Relais Relais	113233
2	Igbt Igbt Igbt Igbt Igbt	111094
3	Sensore di hall Sensor hall Hall sensor Hall sensor Sensor de hall	112381
5	Condensatore Condensateur Condenser Kondensator Condensator	116740
6	Ponte Pont Bridge Brücke Puente	111465
7	Induttanza Inductance Inductance Drossel Induccion	116747
8	Sensore hall Capteur hall Sensor hall Messfuhler hall Sensor hall	116836
9	Elettrovalvola Electrovanne Electrovalve Elektroventil Electrovalvula	121800
10	Termostato Thermostat Thermal switch Thermostat Termostato	121429
11	Commutatore Commutateur Switch Schalter Conmutador	122017
12	Portafusibile Porte fusible Fuse holder Sicherungshalter Porta fusible	122159
13	Fusibile Fusible Fuse Sicherung Fusible	122437
14	Termostato Thermostat Thermal switch Thermostat Termostato	122571
15	Presa 5 poli Prise 5 pins Socket 5 pins Steckdose 5 pins Tomacorriente 5 pins	121587
16	Cablaggio controllo Cable de controle Control cable Kontrolkabel Cable de control	125099
17	Cablaggio g.R.A. Cable g.R.A. G.R.A.Cable G.R.A.Kabel Cable g.R.A.	124324
18	Cavo alim. 4g2.5 2 M Cable alim. 4g2.5 2 M Mains cable 4g2.5 2 M Netzkabel 4g2.5 2 M Cable alim. 4g2.5 2 M	132026
19	Ventilatore Ventilateur Fan Ventilator Ventilador	152000
20	Trasformatore ausiliario Transformateur auxiliaire Auxiliary transformer Zusatzlich transformator Transformador auxiliar	990987
21	Induttanza Inductance Inductance Drossel Induccion	169550
22	Trasformatore Transformateur complet Transformateur complet Trafo Transformateur complet	169627
23	Set pannello frontale Set panneau partie frontal Front panel set Geraetefront set Set panel frontal	314284
24	Frontale Partie frontal Front panel Geraetefront Frontal	322881
25	Retro Partie arriere Back panel Rueckseite Trasera	322882
26	Manico Poignee Handle Handgriff Manija	322883
27	Piedino Embout Foot Fuss Pie	323001
28	Assieme manopola per commutatore Set poigne pour commutateur Switch knob set Umschaltergriff set Set manjia para conmutador	323101
29	Raccordo Raccord Pipe fitting Anschluss Empalme	602376
30	Mantello Capot Cover Deckel Panel de cobertura	656022
31	Presa atlas 50mmq Prise atlas 50mmq Atlas socket 50mmq Atlas steckdose 50mmq Enchufe atlas 50mmq	712036
32	Kit raccordo entrata gas Kit raccord entree gaz Gas pipe connector kit Gaseintrittkit Kit racor entrada gas	980548
33	Kit manopola nera Kit poignee noir Black knob kit Schwarze griff kit Kit manija negra	980772
34	Kit scheda hf ac/dc Kit fiche hf ac/dc Hf ac/dc board kit Hf ac/dc karte kit Kit tarjeta hf ac/dc	980799
35	Kit fondo Kit chassis Bottom kit Bodenteil kit Kit fondo	980817
36	Kit resistenzaa+condensatore Kit resistance+condensateur Resistance+capacitor kit Widerstand+kondensator kit Kit resistencia+condensador	980820
37	Kit scheda filtro ingresso Kit platine filtre input Input filter card kit Input filterkarte kit Kit tarjeta filtro input	981521
38	Kit pannello + scheda Kit panneau + module Panel + card kit Tafel + karte kit Kit panel + tarjeta	982037
39	Kit scheda primario Kit fiche primaire Primary pcb kit Primaertrafokarte kit Kit tarjeta primario	980994
40	Kit scheda potenza Kit platine puissance Power board kit Leistungskartekit Kit tarjeta de potencia	980995
41	Kit scheda induttanza Kit fiche inductance Inductance card kit Drosselskarte kit Kit tarjeta induccion	980996
42	Kit scheda secondario Kit fiche secondaire Secondary pcb kit Sekundaertrafokarte kit Kit tarjeta secundario	980997
43	Kit trasformatore potenza Kit trasformateur puissance Power transformer kit Leistungstrafokit Kit transformador potencia	980998
44	Kit trasformatore hf Kit trasformateur hf Hf transformer kit Hf trafokit Kit transformador hf	980999
45	Kit pressacavo Kit presse cable Cable bushing kit Kabelhalter kit Kit prensa cable	990439
46	Kit diodi Kit diode Diodes kit Diode kit Kit diodos	990856

Schema elettrico, Schéma électrique, Diagram, Schaltplan, Esquema de conexiones.

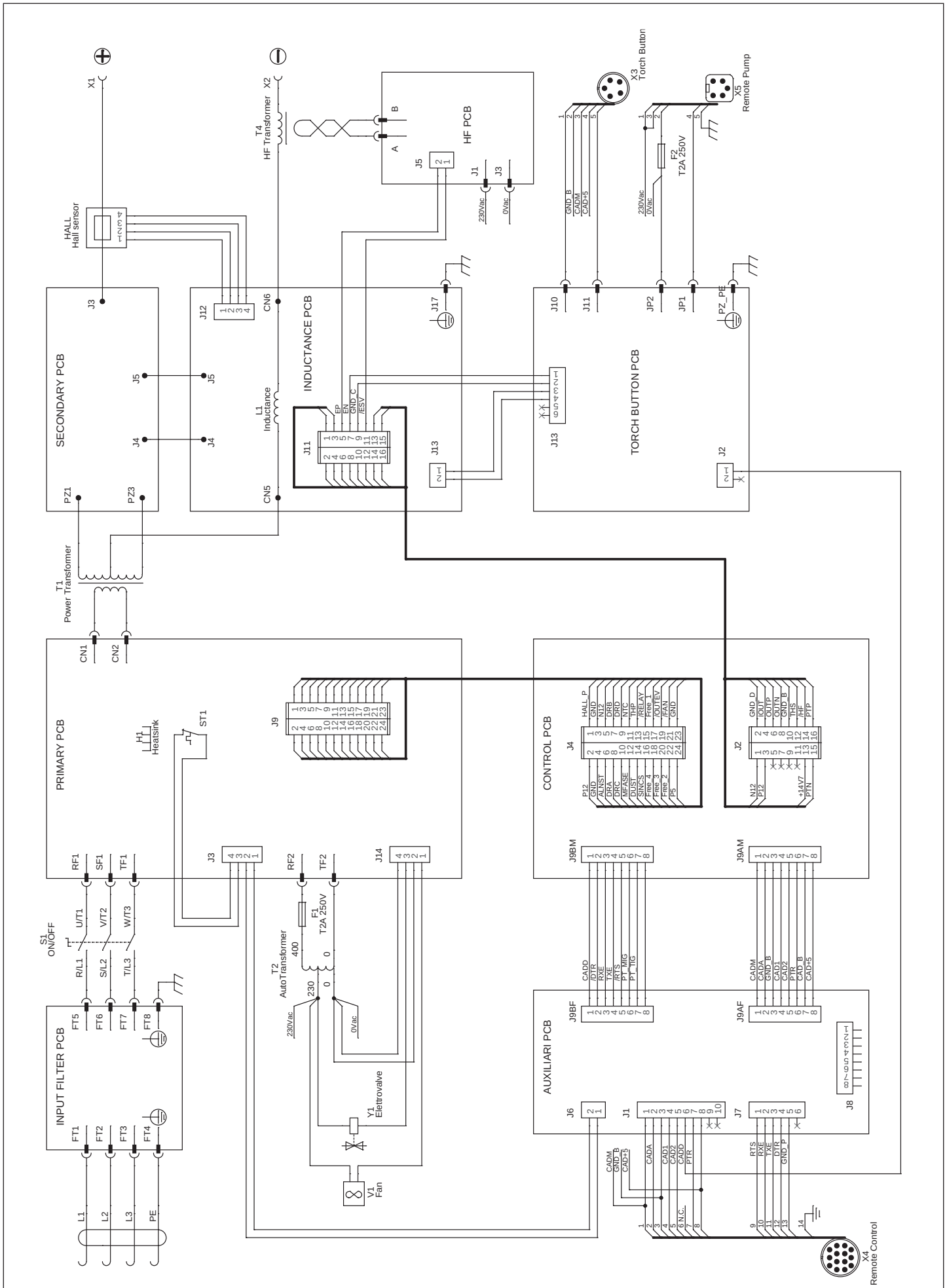

Esploso torcia, Dessin torche, Torch drawing, Schlauchpaket - Explosionszeichnung, Diseño seccionado antorcha.

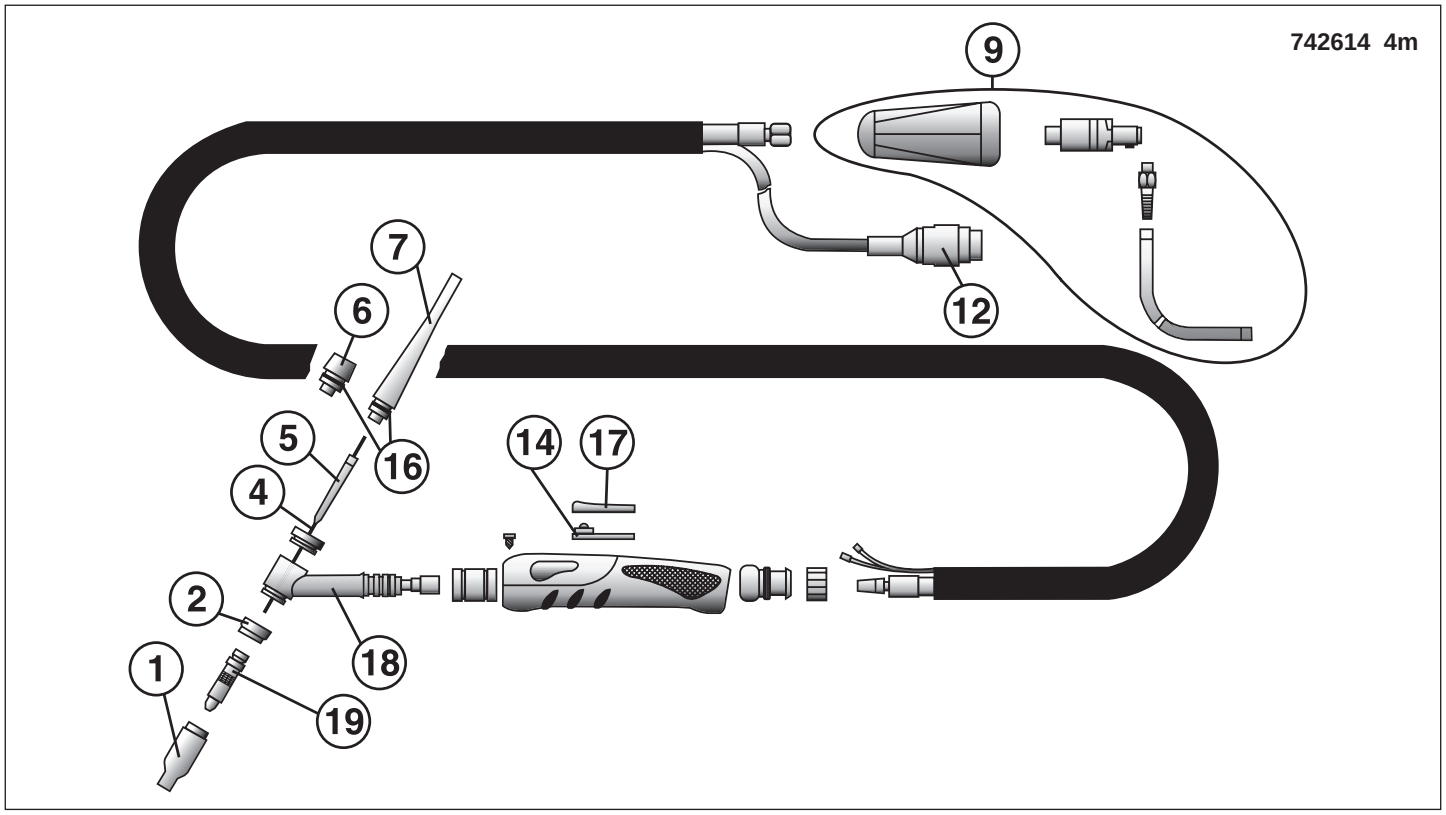

REF.	ELENCO PEZZI RICAMBIO TORCIA LISTE PIECES DETACHEES TORCHE SPARE PARTS LIST TORCH ERSATZTEILLISTE SCLAUCHPAKET PIEZAS DE REPUESTO ANTORCHA	CODICE CODE KODE
1	Kit 10 ugelli ceramici nr.10 Kit 10 buses ceramiques nr.10 Kit 10 ceramic nozzles nr.10 Kit 10 keramikdüsen nr.10 Kit 10 inyectores ceramicos nr.10	802248
1	Kit 10 ugelli ceramici nr.8 Kit 10 buses ceramiques nr.8 Kit 10 ceramic nozzles nr.8 Kit 10 keramikdüsen nr.8 Kit 10 inyectores ceramicos nr.8	802247
1	Kit 10 ugelli ceramici nr.7 Kit 10 buses ceramiques nr.7 Kit 10 ceramic nozzles nr.7 Kit 10 keramikdüsen nr.7 Kit 10 inyectores ceramicos nr.7	802246
1	Kit 10 ugelli ceramici nr.6 Kit 10 buses ceramiques nr.6 Kit 10 ceramic nozzles nr.6 Kit 10 keramikdüsen nr.6 Kit 10 inyectores ceramicos nr.6	802245
1	Kit 10 ugelli ceramici nr.4 Kit 10 buses ceramiques nr.4 Kit 10 ceramic nozzles nr.4 Kit 10 keramikdüsen nr.4 Kit 10 inyectores ceramicos nr.4	802244
2	Isolante Isolant Insulator Isolator Aislador	722248
4	Kit 10 elettr.Tungsteno puro d. 4 Mm Kit 10 electr.Tungstene pur d. 4 Mm Kit 10 pure tungsten electr. D. 4 Mm Kit 10 reinwolfram elektr. D. 4 Mm Kit 10 electr.Tungsteno puro d. 4 Mm	802238
4	Kit 10 elettr.Tungsteno puro d.3,2 Mm Kit 10 electr.Tungstene pur d.3,2 Mm Kit 10 pure tungsten electr. D.3,2 Mm Kit 10 reinwolfram elektr. D.3,2 Mm Kit 10 electr.Tungsteno puro d.3,2 Mm	802237
4	Kit 10 elettr.Tungsteno puro d.2,4 Mm Kit 10 electr.Tungstene pur d.2,4 Mm Kit 10 pure tungsten electr. D.2,4 Mm Kit 10 reinwolfram elektrm d.2,4 Mm Kit 10 electr.Tungsteno puro d.2,4 Mm	802236
4	Kit 10 elettr.Tungsteno puro d.1,6 Mm Kit 10 electr.Tungstene pur d.1,6 Mm Kit 10 pure tungsten electr. D.1,6 Mm Kit 10 reinwolfram elektr. D.1,6 Mm Kit 10 electr.Tungsteno puro d.1,6 Mm	802235
4	Kit 10 elettr.Tungsteno ceriato d.3,2 Mm Kit 10 electr.Tungstene-cerium d.3,2 Mm Kit 10 cerium-tungsten electr. D.3,2 Mm Kit 10 wolfram-zerium elektr. D.3,2 Mm Kit 10 electr.Tungsteno cerio d.3,2 Mm	802233
4	Kit 10 elettr.Tungsteno ceriato d.2,4 Mm Kit 10 electr.Tungstene-cerium d.2,4 Mm Kit 10 cerium-tungsten electr. D.2,4 Mm Kit 10 wolfram-zerium elektr. D.2,4 Mm Kit 10 electr.Tungsteno cerio d.2,4 Mm	802232

REF.	ELENCO PEZZI RICAMBIO TORCIA LISTE PIECES DETACHEES TORCHE SPARE PARTS LIST TORCH ERSATZTEILLISTE SCLAUCHPAKET PIEZAS DE REPUESTO ANTORCHA	CODICE CODE KODE
4	Kit 10 elettr.Tungsteno ceriato d.1,6 Mm Kit 10 electr.Tungstene-cerium d.1,6 Mm Kit 10 cerium-tungsten electr. D.1,6 Mm Kit 10 wolfram-zerium elektr. D.1,6 Mm Kit 10 electr.Tungsteno cerio d.1,6 Mm	802222
4	Kit 10 elettr.Tungsteno ceriato d.1 Mm Kit 10 electr.Tungstene-cerium d.1 Mm Kit 10 cerium-tungsten electr. D.1 Mm Kit 10 wolfram-zerium elektr. D.1 Mm Kit 10 electr.Tungsteno cerio d.1 Mm	802220
5	Kit 3 pinze serra elettrodo d.1,0 Mm Kit 3 pinces porte-electrode d.1,0 Mm Kit 3 electrode holder clamps d.1,0 Mm Kit 3 elektrodenhalterzangen d.1,0 Mm Kit 3 pinzas porta electrodo d.1,0 Mm	802239
5	Kit 3 pinze serra elettrodo d.1,6 Mm Kit 3 pinces porte-electrode d.1,6 Mm Kit 3 electrode holder clamps d.1,6 Mm Kit 3 elektrodenhalterzangen d.1,6 Mm Kit 3 pinzas porta electrodo d.1,6 Mm	802240
5	Kit 3 pinze serra elettrodo d.2,4 Mm Kit 3 pinces porte-electrode d.2,4 Mm Kit 3 electrode holder clamps d.2,4 Mm Kit 3 elektrodenhalterzangen d.2,4 Mm Kit 3 pinzas porta electrodo d.2,4 Mm	802241
5	Kit 3 pinze serra elettrodo d.3,2 Mm Kit 3 pinces porte-electrode d.3,2 Mm Kit 3 electrode holder clamps d.3,2 Mm Kit 3 elektrodenhalterzangen d.3,2 Mm Kit 3 pinzas porta electrodo d.3,2 Mm	802242
5	Kit 3 pinze serra elettrodo d.4 Mm Kit 3 pinces porte-electrode d.4 Mm Kit 3 electrode holder clamps d.4 Mm Kit 3 elektrodenhalterzangen d.4 Mm Kit 3 pinzas porta electrodo d.4 Mm	802243
6	Cappuccio corto st17-26 Capuchon petit st17-26 Short cap st17-26 Kurze kappe st17-26 Capuchon corto st17-26	722192
7	Cappuccio lungo st17-26 Capuchon long Long cap Lange kappe Capuchon largo	722193
9	Kit attacco atlas 50mmq Kit embout atlas 50mmq Atlas 50mmq connection kit Atlas 50mmq anschluss kit Kit conexion atlas 50mmq	981443
12	Spina 5p Fiche 5p 5p plug 5p stecker Espina 5p	742599
14	Contatto pulsante Contact poussoir Pushbotton contact Druckknopfkontakt Contacto pulsador	452089

REF.	ELENCO PEZZI RICAMBIO TORCIA LISTE PIECES DETACHEES TORCHE SPARE PARTS LIST TORCH ERSATZTEILLISTE SCLAUCHPAKET PIEZAS DE REPUESTO ANTORCHA	CODICE CODE KODE
16	Anello or Bague or Or ring Or ring Anillo or	722061
17	Pulsante Poussoir Pushbotton Druckknopf Pulsador	742042
18	Corpo torcia Corps torche Torch body Schlauchpaketteil Cuerpo de antorcha	722944
19	Kit 3 diffusori elettrodo d.1 Mm Kit 3 diffuseurs electrode d.1 Mm Kit 3 electrode diffusers d.1 Mm Kit 3 gasverteiler d.1 Mm Kit 3 difusores electrodo d.1 Mm	802249
19	Kit 3 diffusori elettrodo d.1,6 Mm Kit 3 diffuseurs electrode d.1,6 Mm Kit 3 electrode diffusers d.1,6 Mm Kit 3 gasverteiler d.1,6 Mm Kit 3 difusores electrodo d.1,6 Mm	802250
19	Kit 3 diffusori elettrodo d.2,4 Mm Kit 3 diffuseurs electrode d.2,4 Mm Kit 3 electrode diffusers d.2,4 Mm Kit 3 gasverteiler d.2,4 Mm Kit 3 difusores electrodo d.2,4 Mm	802251
19	Kit 3 diffusori elettrodo d.3,2 Mm Kit 3 diffuseurs electrode d.3,2 Mm Kit 3 electrode diffusers d.3,2 Mm Kit 3 gasverteiler d.3,2 Mm Kit 3 difusores electrodo d.3,2 Mm	802252
19	Kit 3 diffusori elettrodo d.4 Mm Kit 3 diffuseurs electrode d.4 Mm Kit 3 electrode diffusers d.4 Mm Kit 3 gasverteiler d.4 Mm Kit 3 difusores electrodo d.4 Mm	802253

ELENCO PEZZI DI RICAMBIO
LISTE PIECES DETACHEES
SPARE PARTS LIST
ERSATZTEILLISTE
PIEZAS DE REPUESTO

SUPERIOR TIG 422 AC/DC-HF/LIFT

TELWIN

Esploso macchina, Dessin appareil, Machine drawing, Explosions Zeichnung des Geräts, Diseño seccionado maquina.

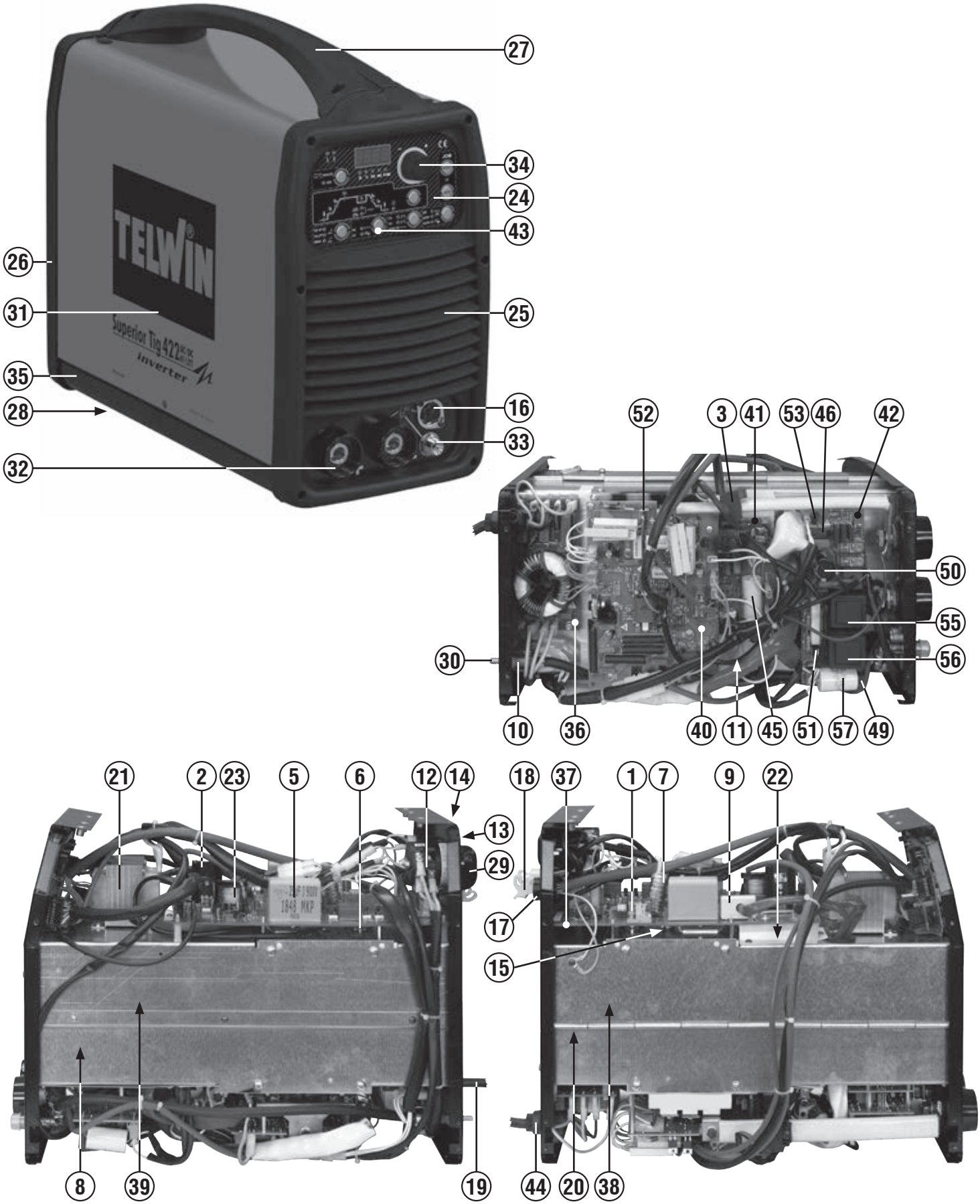

REF.	ELENCO PEZZI DI RICAMBIO PIECES DETACHEES SPARE PARTS LIST ERSATZTEILLISTE PIEZAS DE REPUESTO	CODICE CODE KODE
1	Rele' Relais Relais Relais Relais	113233
2	Igbt Igbt Igbt Igbt Igbt	113603
3	Sensore di hall Sensor hall Hall sensor Hall sensor Sensor de hall	112381
5	Condensatore Condensateur Condenser Kondensator Condensator	116740
6	Ponte Pont Bridge Brücke Puente	111465
7	Induttanza Inductance Inductance Drossel Induccion	116747
8	Resistenza Resistance Resistance Widerstand Resistencia	116759
9	Sensore hall Capteur hall Sensor hall Messfuhler hall Sensor hall	116836
10	Elettrovalvola Electrovanne Electrovalve Elektroventil Electrovalvula	121800
11	Termostato Thermostat Thermal switch Thermostat Termostato	121429
12	Commutatore Commutateur Switch Schalter Conmutador	122017
13	Portafusibile Porte fusible Fuse holder Sicherungshalter Porta fusible	122159
14	Fusibile Fusible Fuse Sicherung Fusible	122437
15	Termostato Thermostat Thermal switch Thermostat Termostato	122571
16	Presa 5 poli Prise 5 pins Socket 5 pins Steckdose 5 pins Tomacorriente 5 pins	121587
17	Cablaggio controllo Cable de controle Control cable Kontrolkabel Cable de control	125099
18	Cablaggio g.R.A. Cable g.R.A. G.R.A.Cable G.R.A.Kabel Cable g.R.A.	124324
19	Cavo alim. 4g2.5 2 M Cable alim. 4g2.5 2 M Mains cable 4g2.5 2 M Netzkabel 4g2.5 2 M Cable alim. 4g2.5 2 M	132026
20	Ventilatore Ventilateur Fan Ventilator Ventilador	152000
21	Trasformatore ausiliario Transformateur auxiliaire Auxiliary transformer Zusatzlich transformator Transformador auxiliar	990987
22	Induttanza Inductance Inductance Drossel Induccion	169550
23	Trasformatore Transformateur complet Transformateur complet Trafo Transformateur complet	169627
24	Pannello frontale Panneau partie frontal Front panel Geraetefront Panel frontal	314357
25	Frontale Partie frontal Front panel Geraetefront Frontal	322881
26	Retro Partie arriere Back panel Rueckseite Trasera	322882
27	Manico Poignee Handle Handgriff Manija	322883
28	Piedino Embout Foot Fuss Pie	323001
29	Assieme manopola per commutatore Set poigne pour commutateur Switch knob set Umschaltergriff set Set manjia para conmutador	323101
30	Raccordo Raccord Pipe fitting Anschluss Empalme	602376
31	Mantello Capot Cover Deckel Panel de cobertura	656029
32	Presa atlas 50mmq Prise atlas 50mmq Atlas socket 50mmq Atlas steckdose 50mmq Enchufe atlas 50mmq	712036
33	Kit raccordo entrata gas Kit raccord entree gaz Gas pipe connector kit Gaseintrittkit Kit racor entrada gas	980548
34	Kit manopola nera Kit poignee noir Black knob kit Schwarze griff kit Kit manija negra	980772
35	Kit fondo Kit chassis Bottom kit Bodenteil kit Kit fondo	980817
36	Kit scheda filtro ingresso Kit platine filtre input Input filter card kit Input filterkarte kit Kit tarjeta filtro input	981521
37	Kit scheda primario Kit fiche primaire Primary pcb kit Primaertrafokarte kit Kit tarjeta primario	980994
38	Kit trasformatore hf Kit trasformateur hf Hf transformer kit Hf trafokit Kit transformador hf	980999
39	Kit trasformatore potenza Kit transformateur puissance Power transformer kit Leistungstransformatorkit Kit transformador de potencia	981050
40	Kit scheda secondario superior tig 422 Kit scheda secondario superior tig 422 Kit scheda secondario superior tig 422 Kit scheda secondario superior tig 422 Kit scheda secondario superior tig 422	982193
41	Kit scheda induttanza Kit fiche inductance Inductance card kit Drosselskarte kit Kit tarjeta induccion	981052
42	Kit scheda hf/survolt. Kit fiche hf/survolt. Hf/survolt. Board kit Hf/survolt. Karte kit Kit tarjeta hf/survolt.	981053
43	Assieme pannello-scheda Frontal + platine set Front panel + module set Gerätefront + platine set Set frontal + tarjeta	982038
44	Kit pressacavo Kit presse cable Cable bushing kit Kabelhalter kit Kit prensa cable	990439
45	Condensatore Condensateur Condenser Kondensator Condensator	112828
46	Raddrizzatore monofase Redresseur monophase Single-phase rectifier Einphasiger gleichrichter Rectificador monofasico	112949
49	Diodo Diode Diode Diode Diodo	111092
50	Condensatore Condensateur Condenser Kondensator Condensator	116967
51	Diodo Diode Diode Diode Diodo	116325
52	Diodo Diode Diode Diode Diodo	116442
53	Resistenza Resistance Resistance Widerstand Resistencia	116465
55	Induttanza Inductance Inductance Drossel Induccion	116821
56	Trasformatore x survoltore Transformateur x survoltore Transformer x survoltor Trafo x survoltor Transformador x survoltore	116937
57	Condensatore Condensateur Condenser Kondensator Condensator	116940

Schema elettrico, Schéma électrique, Diagram, Schaltplan, Esquema de conexiones.

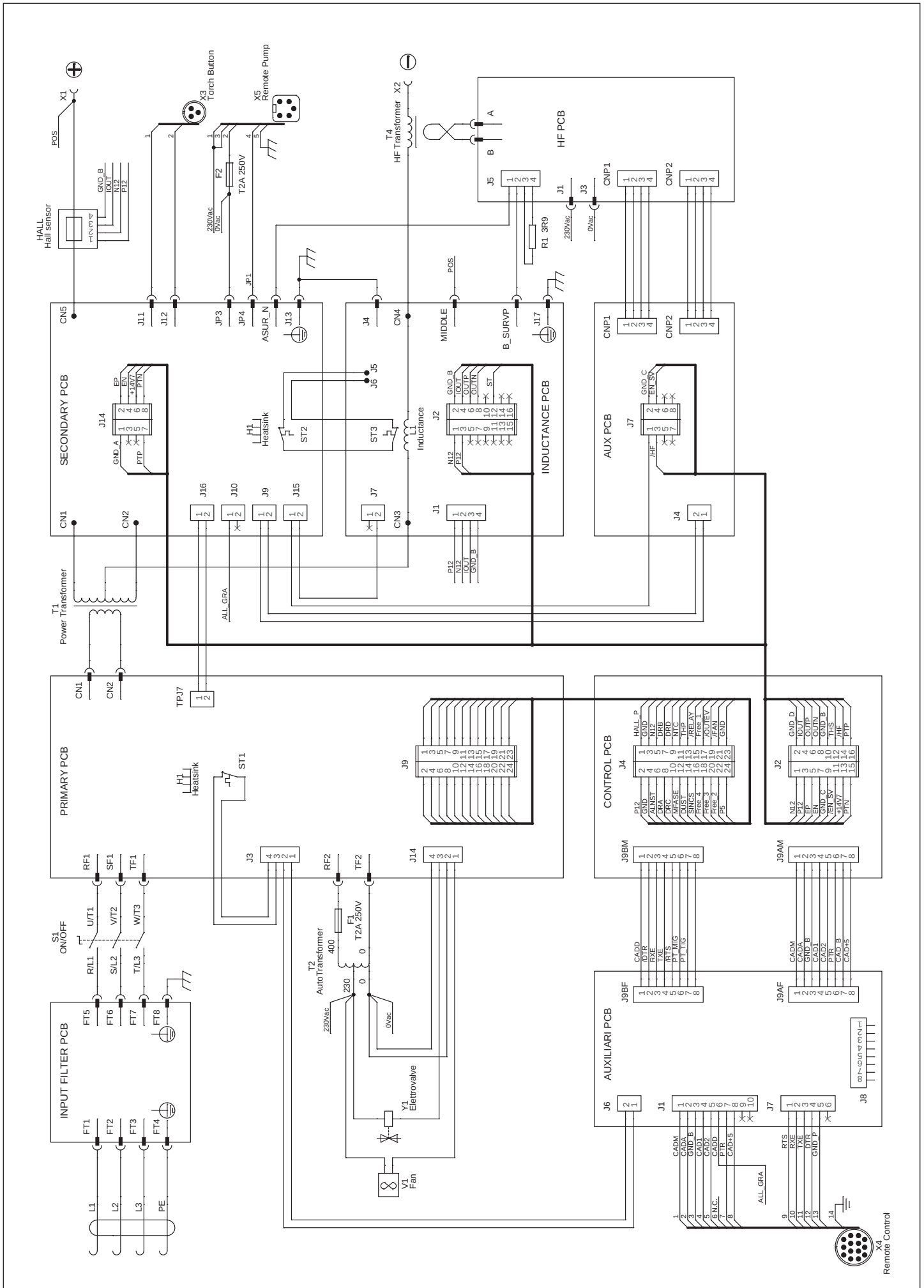

Esploso torcia, Dessin torche, Torch drawing, Schlauchpaket - Explosionszeichnung, Diseño seccionado antorcha.

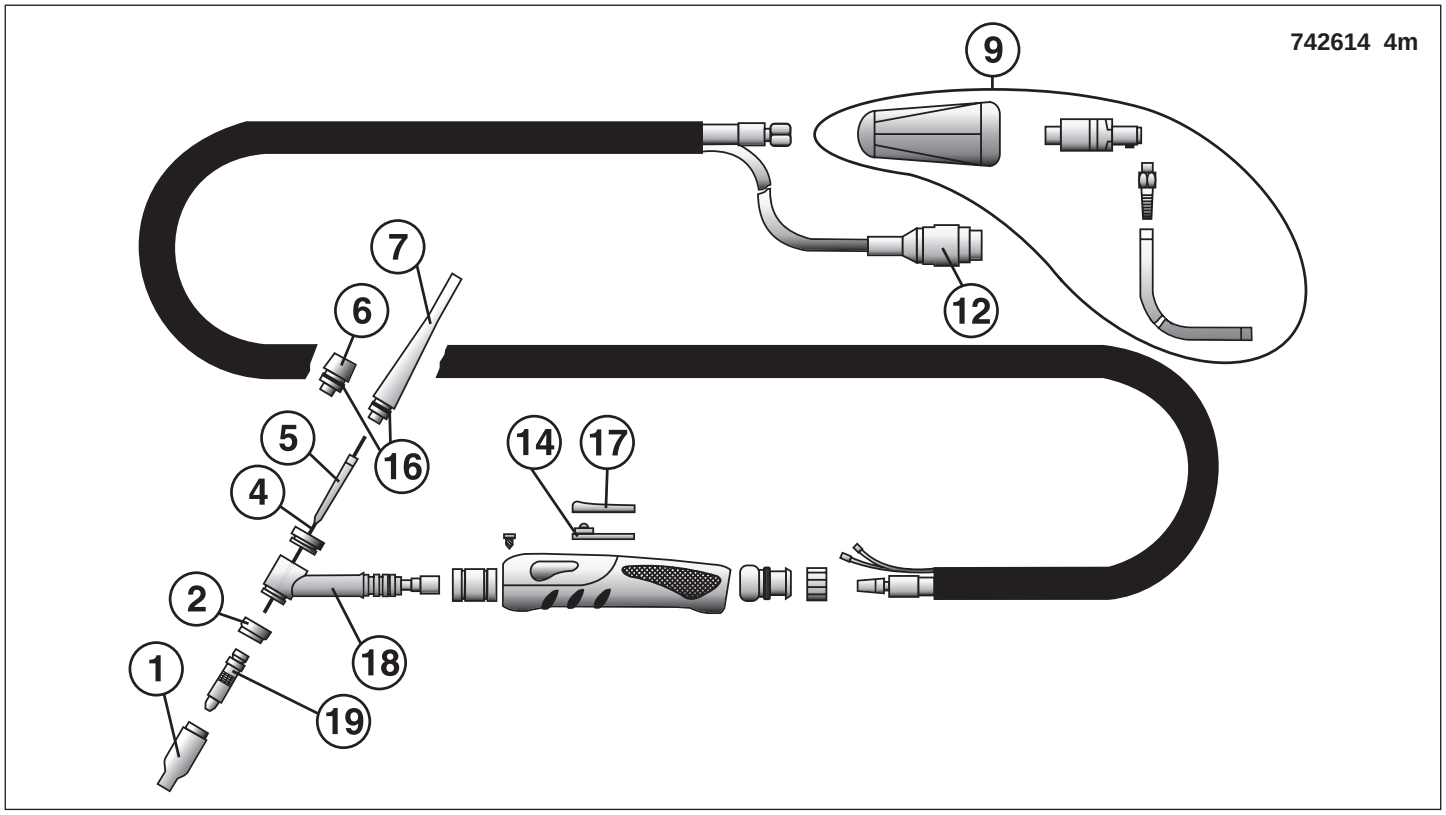

REF.	ELENCO PEZZI RICAMBIO TORCIA LISTE PIECES DETACHEES TORCHE SPARE PARTS LIST TORCH ERSATZTEILLISTE SCLAUCHPAKET PIEZAS DE REPUESTO ANTORCHA	CODICE CODE KODE
1	Kit 10 ugelli ceramici nr.10 Kit 10 buses ceramiques nr.10 Kit 10 ceramic nozzles nr.10 Kit 10 keramikdüsen nr.10 Kit 10 inyectores ceramicos nr.10	802248
1	Kit 10 ugelli ceramici nr.8 Kit 10 buses ceramiques nr.8 Kit 10 ceramic nozzles nr.8 Kit 10 keramikdüsen nr.8 Kit 10 inyectores ceramicos nr.8	802247
1	Kit 10 ugelli ceramici nr.7 Kit 10 buses ceramiques nr.7 Kit 10 ceramic nozzles nr.7 Kit 10 keramikdüsen nr.7 Kit 10 inyectores ceramicos nr.7	802246
1	Kit 10 ugelli ceramici nr.6 Kit 10 buses ceramiques nr.6 Kit 10 ceramic nozzles nr.6 Kit 10 keramikdüsen nr.6 Kit 10 inyectores ceramicos nr.6	802245
1	Kit 10 ugelli ceramici nr.4 Kit 10 buses ceramiques nr.4 Kit 10 ceramic nozzles nr.4 Kit 10 keramikdüsen nr.4 Kit 10 inyectores ceramicos nr.4	802244
2	Isolante Isolant Insulator Isolator Aislador	722248
4	Kit 10 elettr.Tungsteno puro d. 4 Mm Kit 10 electr.Tungstene pur d. 4 Mm Kit 10 pure tungsten electr. D. 4 Mm Kit 10 reinwolfram elektr. D. 4 Mm Kit 10 electr.Tungsteno puro d. 4 Mm	802238
4	Kit 10 elettr.Tungsteno puro d.3,2 Mm Kit 10 electr.Tungstene pur d.3,2 Mm Kit 10 pure tungsten electr. D.3,2 Mm Kit 10 reinwolfram elektr. D.3,2 Mm Kit 10 electr.Tungsteno puro d.3,2 Mm	802237
4	Kit 10 elettr.Tungsteno puro d.2,4 Mm Kit 10 electr.Tungstene pur d.2,4 Mm Kit 10 pure tungsten electr. D.2,4 Mm Kit 10 reinwolfram elektrm d.2,4 Mm Kit 10 electr.Tungsteno puro d.2,4 Mm	802236
4	Kit 10 elettr.Tungsteno puro d.1,6 Mm Kit 10 electr.Tungstene pur d.1,6 Mm Kit 10 pure tungsten electr. D.1,6 Mm Kit 10 reinwolfram elektr. D.1,6 Mm Kit 10 electr.Tungsteno puro d.1,6 Mm	802235
4	Kit 10 elettr.Tungsteno ceriato d.3,2 Mm Kit 10 electr.Tungstene-cerium d.3,2 Mm Kit 10 cerium-tungsten electr. D.3,2 Mm Kit 10 wolfram-zerium elektr. D.3,2 Mm Kit 10 electr.Tungsteno cerio d.3,2 Mm	802233
4	Kit 10 elettr.Tungsteno ceriato d.2,4 Mm Kit 10 electr.Tungstene-cerium d.2,4 Mm Kit 10 cerium-tungsten electr. D.2,4 Mm Kit 10 wolfram-zerium elektr. D.2,4 Mm Kit 10 electr.Tungsteno cerio d.2,4 Mm	802232

REF.	ELENCO PEZZI RICAMBIO TORCIA LISTE PIECES DETACHEES TORCHE SPARE PARTS LIST TORCH ERSATZTEILLISTE SCLAUCHPAKET PIEZAS DE REPUESTO ANTORCHA	CODICE CODE KODE
4	Kit 10 elettr.Tungsteno ceriato d.1,6 Mm Kit 10 electr.Tungstene-cerium d.1,6 Mm Kit 10 cerium-tungsten electr. D.1,6 Mm Kit 10 wolfram-zerium elektr. D.1,6 Mm Kit 10 electr.Tungsteno cerio d.1,6 Mm	802222
4	Kit 10 elettr.Tungsteno ceriato d.1 Mm Kit 10 electr.Tungstene-cerium d.1 Mm Kit 10 cerium-tungsten electr. D.1 Mm Kit 10 wolfram-zerium elektr. D.1 Mm Kit 10 electr.Tungsteno cerio d.1 Mm	802220
5	Kit 3 pinze serra elettrodo d.1,0 Mm Kit 3 pinces porte-electrode d.1,0 Mm Kit 3 electrode holder clamps d.1,0 Mm Kit 3 elektrodenhalterzangen d.1,0 Mm Kit 3 pinzas porta electrodo d.1,0 Mm	802239
5	Kit 3 pinze serra elettrodo d.1,6 Mm Kit 3 pinces porte-electrode d.1,6 Mm Kit 3 electrode holder clamps d.1,6 Mm Kit 3 elektrodenhalterzangen d.1,6 Mm Kit 3 pinzas porta electrodo d.1,6 Mm	802240
5	Kit 3 pinze serra elettrodo d.2,4 Mm Kit 3 pinces porte-electrode d.2,4 Mm Kit 3 electrode holder clamps d.2,4 Mm Kit 3 elektrodenhalterzangen d.2,4 Mm Kit 3 pinzas porta electrodo d.2,4 Mm	802241
5	Kit 3 pinze serra elettrodo d.3,2 Mm Kit 3 pinces porte-electrode d.3,2 Mm Kit 3 electrode holder clamps d.3,2 Mm Kit 3 elektrodenhalterzangen d.3,2 Mm Kit 3 pinzas porta electrodo d.3,2 Mm	802242
5	Kit 3 pinze serra elettrodo d.4 Mm Kit 3 pinces porte-electrode d.4 Mm Kit 3 electrode holder clamps d.4 Mm Kit 3 elektrodenhalterzangen d.4 Mm Kit 3 pinzas porta electrodo d.4 Mm	802243
6	Cappuccio corto st17-26 Capuchon petit st17-26 Short cap st17-26 Kurze kappe st17-26 Capuchon corto st17-26	722192
7	Cappuccio lungo st17-26 Capuchon long Long cap Lange kappe Capuchon largo	722193
9	Kit attacco atlas 50mmq Kit embout atlas 50mmq Atlas 50mmq connection kit Atlas 50mmq anschluss kit Kit conexion atlas 50mmq	981443
12	Spina 5p Fiche 5p 5p plug 5p stecker Espina 5p	742599
14	Contatto pulsante Contact poussoir Pushbotton contact Druckknopfkontakt Contacto pulsador	452089

REF.	ELENCO PEZZI RICAMBIO TORCIA LISTE PIECES DETACHEES TORCHE SPARE PARTS LIST TORCH ERSATZTEILLISTE SCLAUCHPAKET PIEZAS DE REPUESTO ANTORCHA	CODICE CODE KODE
16	Anello or Bague or Or ring Or ring Anillo or	722061
17	Pulsante Poussoir Pushbotton Druckknopf Pulsador	742042
18	Corpo torcia Corps torche Torch body Schlauchpaketteil Cuerpo de antorcha	722944
19	Kit 3 diffusori elettrodo d.1 Mm Kit 3 diffuseurs electrode d.1 Mm Kit 3 electrode diffusers d.1 Mm Kit 3 gasverteiler d.1 Mm Kit 3 difusores electrodo d.1 Mm	802249
19	Kit 3 diffusori elettrodo d.1,6 Mm Kit 3 diffuseurs electrode d.1,6 Mm Kit 3 electrode diffusers d.1,6 Mm Kit 3 gasverteiler d.1,6 Mm Kit 3 difusores electrodo d.1,6 Mm	802250
19	Kit 3 diffusori elettrodo d.2,4 Mm Kit 3 diffuseurs electrode d.2,4 Mm Kit 3 electrode diffusers d.2,4 Mm Kit 3 gasverteiler d.2,4 Mm Kit 3 difusores electrodo d.2,4 Mm	802251
19	Kit 3 diffusori elettrodo d.3,2 Mm Kit 3 diffuseurs electrode d.3,2 Mm Kit 3 electrode diffusers d.3,2 Mm Kit 3 gasverteiler d.3,2 Mm Kit 3 difusores electrodo d.3,2 Mm	802252
19	Kit 3 diffusori elettrodo d.4 Mm Kit 3 diffuseurs electrode d.4 Mm Kit 3 electrode diffusers d.4 Mm Kit 3 gasverteiler d.4 Mm Kit 3 difusores electrodo d.4 Mm	802253

ELENCO PEZZI DI RICAMBIO
LISTE PIECES DETACHEES
SPARE PARTS LIST
ERSATZTEILLISTE
PIEZAS DE REPUESTO

G.R.A. 4000

TELWIN®

Esploso macchina, Dessin appareil, Machine drawing, Explosions Zeichnung des Geräts, Diseño seccionado maquina.





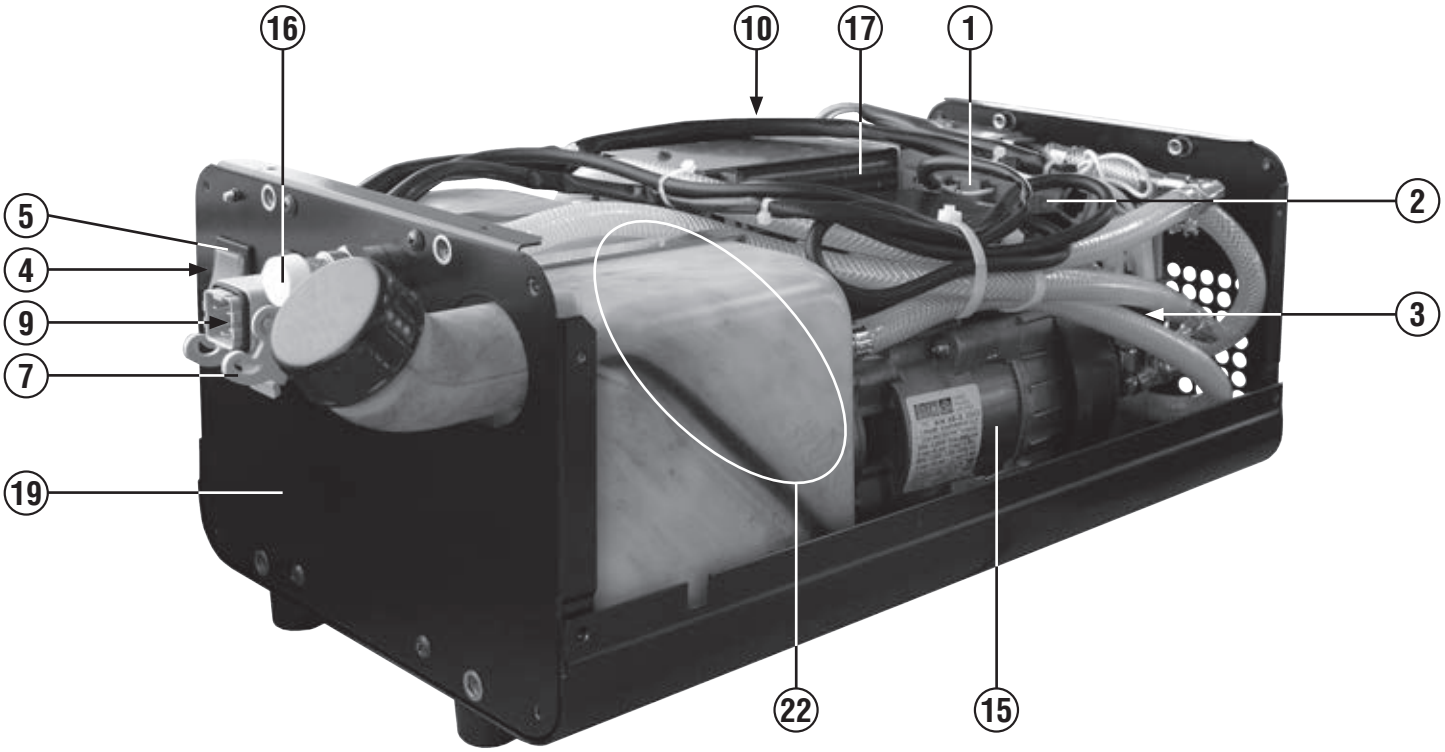

REF.	ELENCO PEZZI DI RICAMBIO PIECES DETACHEES SPARE PARTS LIST ERSATZTEILLISTE PIEZAS DE REPUESTO	CODICE CODE KODE
1	Base Base Basis Basis Base	112482
2	Rele' Relais Relais Relais Relais	116154
3	Pressostato Pressostat Pressure switch Druckanzeige Presostato	121750
4	Copri interruttore Couvre interrupteur Switch cover Schalterdeckel Cubre interruptor	122353
5	Interruttore Interrupteur Switch Schalter Interruptor	122381
6	Lampada gialla Temoin lumineaux jaune Yellow light Gelbe kontrollampe Piloto amarillo	122707
7	Custodia Garde Guard Schutz Proteccion	122849
8	Cavo alimentazione da generatore Cable alimentation du generateur Mains cable from power source Netzkabel von stromquelle Cable alimentador de generador	124124
9	Cablaggio connettore Cable connecteur Connector cable Anschlusskabel Cable conectador	124347
10	Ventilatore Ventilateur Fan Ventilator Ventilador	152101
11	Cornice frontale gra Cadre partie frontal gra Gra front panel frame Gra geraetefrontrahmen Marco del frontal gra	322942
12	Cornice retro gra Cadre partie arriere gra Gra back panel frame Gra rueckseiterahmen Marco trasera gra	322943
13	Attacco rapido blu Embout rapide blue Quick connection blue Schnellanschluss blau Enchufe blue	602297
14	Attacco rapido rosso Embout rapide rouge Quick connection red Schnellanschluss rot Enchufe roja	602296
15	Elettropompa Pompe electrique Electric pump Elektropump Bomba electrica	602259
16	Valvola Vanne Valve Ventil Valvula	602261
17	Radiatore gra Radiateur gra Gra radiator Gra radiator Radiator gra	602312
18	Frontale Partie frontal Front panel Geraetefront Frontal	642111
19	Retro Partie arriere Back panel Rueckseite Trasera	642112
20	Fondo Chassis Bottom Bodenteil Fondo	645478
21	Mantello Capot Cover Deckel Panel de cobertura	651153
22	Kit serbatoio Kit reservoir Tank kit Behaelter kit Kit tanque	981006
23	Kit maniglia Kit poignee Kit handle Kit handgriff Kit manija	990398

REF.	ELENCO PEZZI DI RICAMBIO PIECES DETACHEES SPARE PARTS LIST ERSATZTEILLISTE PIEZAS DE REPUESTO	CODICE CODE KODE

Schema elettrico, Schéma électrique, Diagram, Schaltplan, Esquema de conexiones.

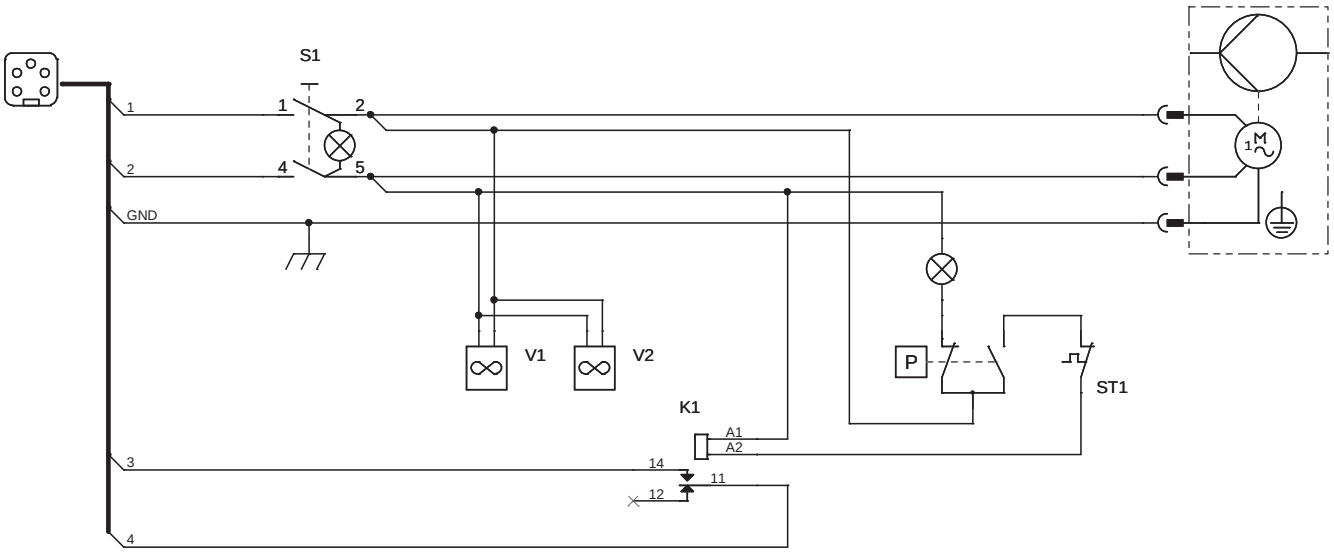

ELENCO PEZZI DI RICAMBIO
LISTE PIECES DETACHEES
SPARE PARTS LIST
ERSATZTEILLISTE
PIEZAS DE REPUESTO

CLEANTECH 100

Esploso macchina, Dessin appareil, Machine drawing, Explosions Zeichnung des Geräts, Diseño seccionado maquina.

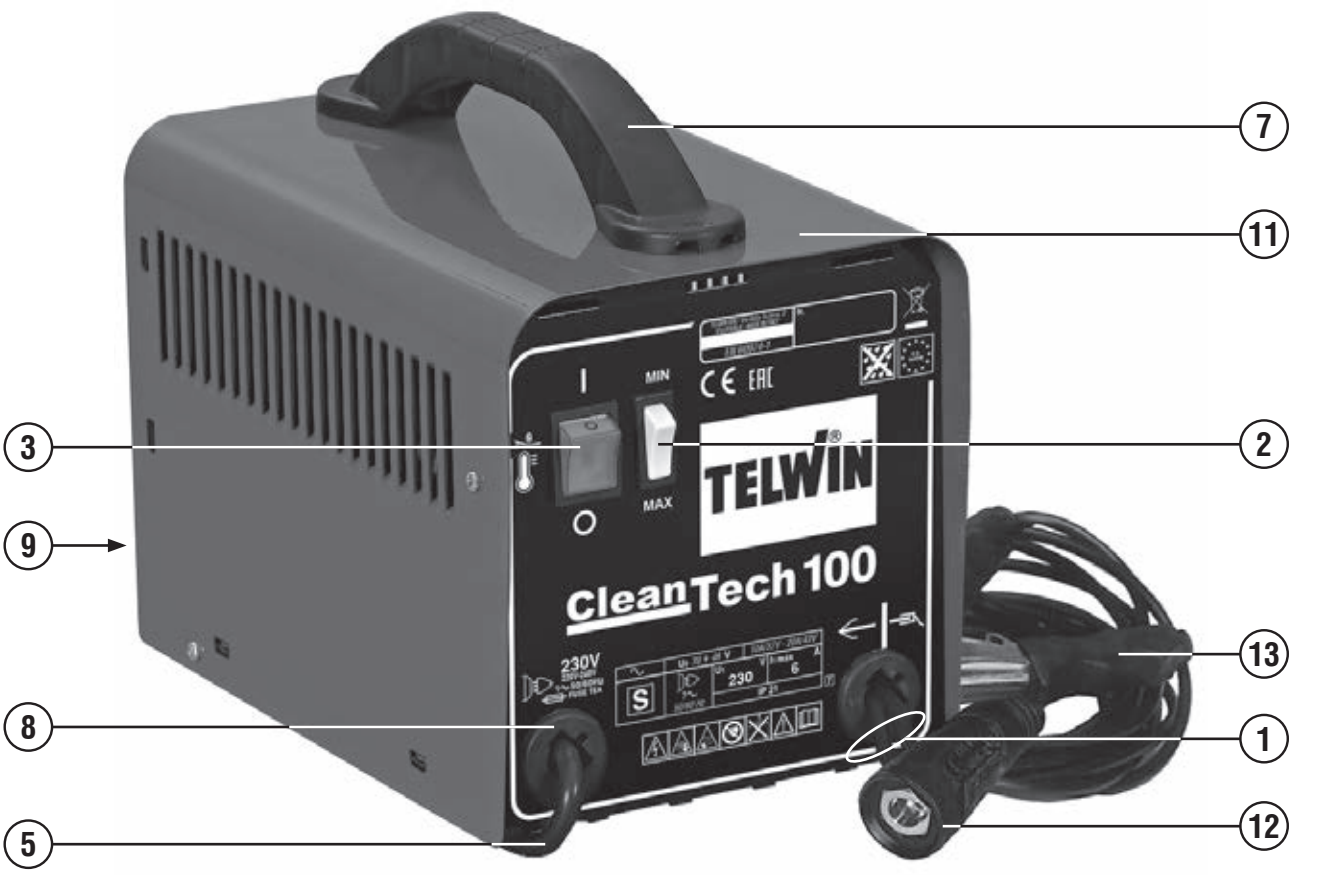

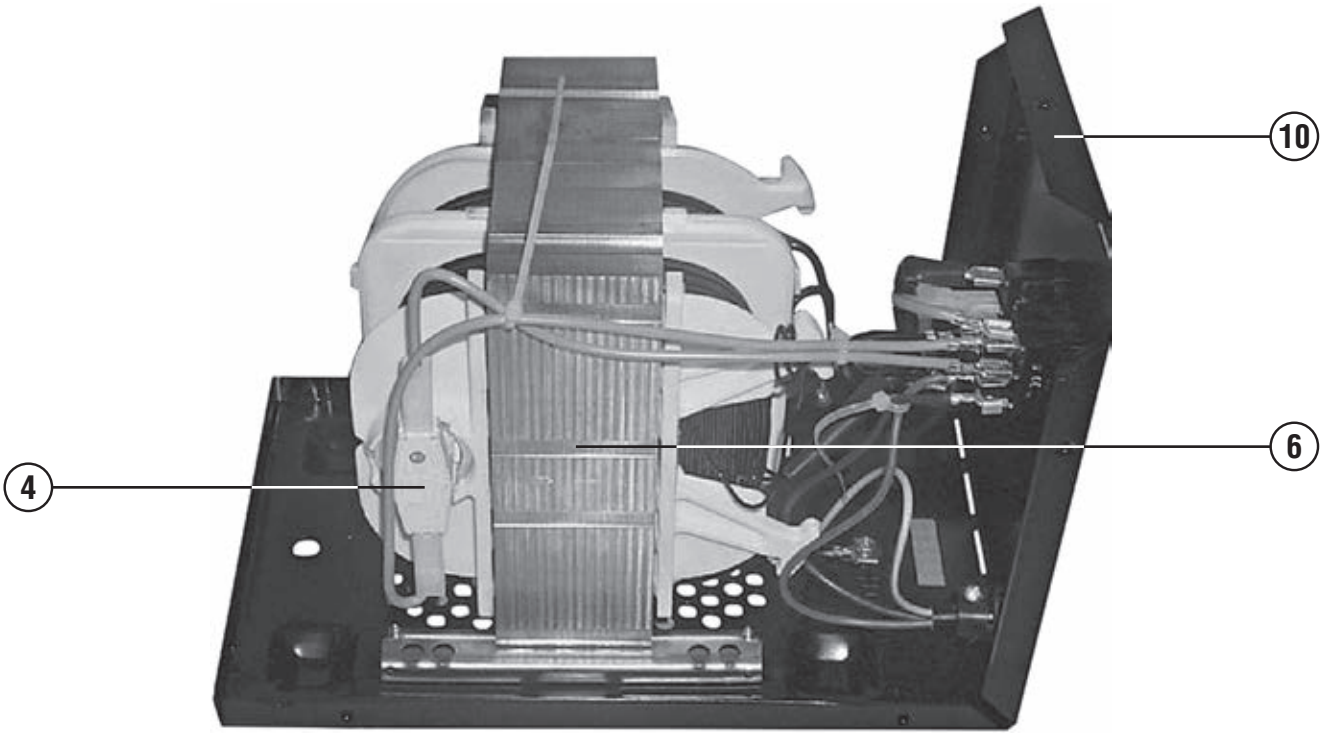

REF.	ELENCO PEZZI DI RICAMBIO PIECES DETACHEES SPARE PARTS LIST ERSATZTEILLISTE PIEZAS DE REPUESTO	CODICE CODE KODE
1	Cavi Cables Cables Kabeln Cables	120755
2	Deviatore Gareur Switch Schalter Interruptor	122400
3	Interruttore Interrupteur Switch Schalter Interruptor	122752
4	Termostato Thermostat Thermostat Thermostat Termostato	121715
5	Cavo alim. 3g1.5 2m spina schuko Cable alim. 3g1.5 2m fiche schuko Mains cable 3g1.5 2m schuko plug Netzkabel 3g1.5 2m schuko stecker Cable alim. 3g1.5 2m espina schuko	132310
6	Trasformatore Trasformateur Transformer Trafo Transformador	164929
7	Maniglia Poignee Handle Handgriff Manija	312007
8	Pressacavo Presse cable Cable bushing Kabelhalter Prensa cable	322112
9	Retro Partie arriere Back panel Rückseite Trasera	644018
10	Frontale Partie frontal Front panel Geraetefront Frontal	649877
11	Kit mantello Kit capot Cover kit Deckelkit Kit panel de cobertura	981553
12	Presa atlas 25mmq Prise atlas 25mmq Socket atlas 25mmq Steckdose atlas 25mmq Enchufe atlas 25mmq	712227
13	Colorado 60b pinza di massa 60a Colorado 60b pince de masse 60a Colorado 60b work clamp 60a Colorado 60b masseklemme 60a Colorado 60b pinza de masa 60a	712361

Schema elettrico, Schéma électrique, Diagram, Schaltplan, Esquema de conexiones.

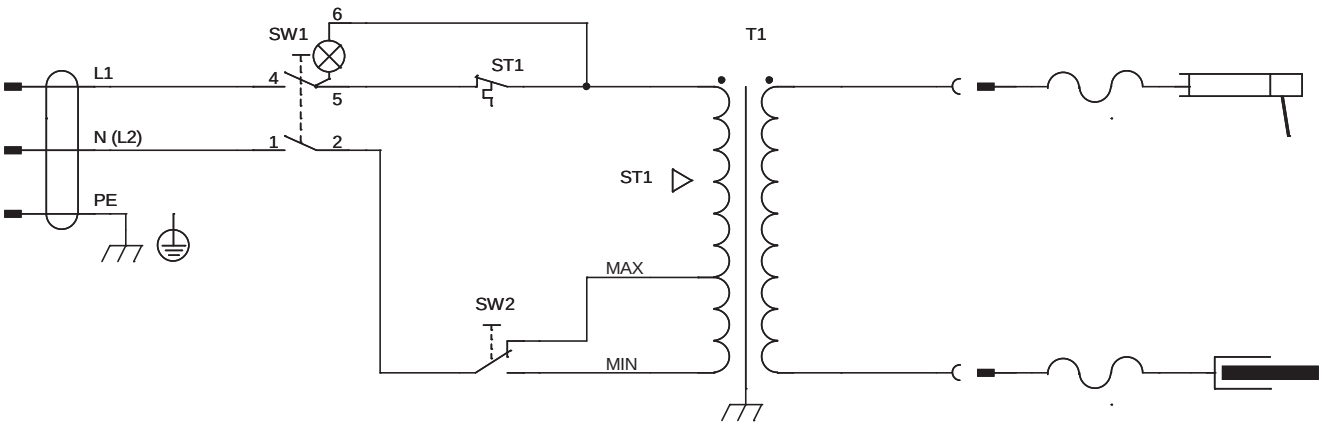

ELENCO PEZZI DI RICAMBIO
LISTE PIECES DETACHEES
SPARE PARTS LIST
ERSATZTEILLISTE
PIEZAS DE REPUESTO

TIG WELDING CLEANING KIT CT 100

Esploso macchina, Dessin appareil, Machine drawing, Explosions Zeichnung des Geräts, Diseño seccionado maquina.



REF.	ELENCO PEZZI DI RICAMBIO PIECES DETACHEES SPARE PARTS LIST ERSATZTEILLISTE PIEZAS DE REPUESTO	CODICE CODE KODE
1	Strisce fibravetro 10 pz Barres fibre de verre 10 pcs Fiberglass strips 10 pcs Glasfaser bänder 10 stk Barras en fibra de vidrio 10 pz	980320
2	Liquido - liquitech 3l Liquide - liquitech 3l Liquid - liquitech 3l Flüssigkeit- liquitech 3l Líquido - liquitech 3l	322905
3	Puntale di pulizia Embout de nettoyage Cleaning tip Reinigungspitze Punta de limpieza	742384
4	Kit impugnatura Kit poignee Handle kit Handgriffekit Kit manija	980792

REF.	ELENCO PEZZI DI RICAMBIO PIECES DETACHEES SPARE PARTS LIST ERSATZTEILLISTE PIEZAS DE REPUESTO	CODICE CODE KODE

REF.	ELENCO PEZZI DI RICAMBIO PIECES DETACHEES SPARE PARTS LIST ERSATZTEILLISTE PIEZAS DE REPUESTO	CODICE CODE KODE

ELENCO PEZZI DI RICAMBIO
LISTE PIECES DETACHEES
SPARE PARTS LIST
ERSATZTEILLISTE
PIEZAS DE REPUESTO

CLEANTECH 200

Esploso macchina, Dessin appareil, Machine drawing, Explosions Zeichnung des Geräts, Diseño seccionado maquina.



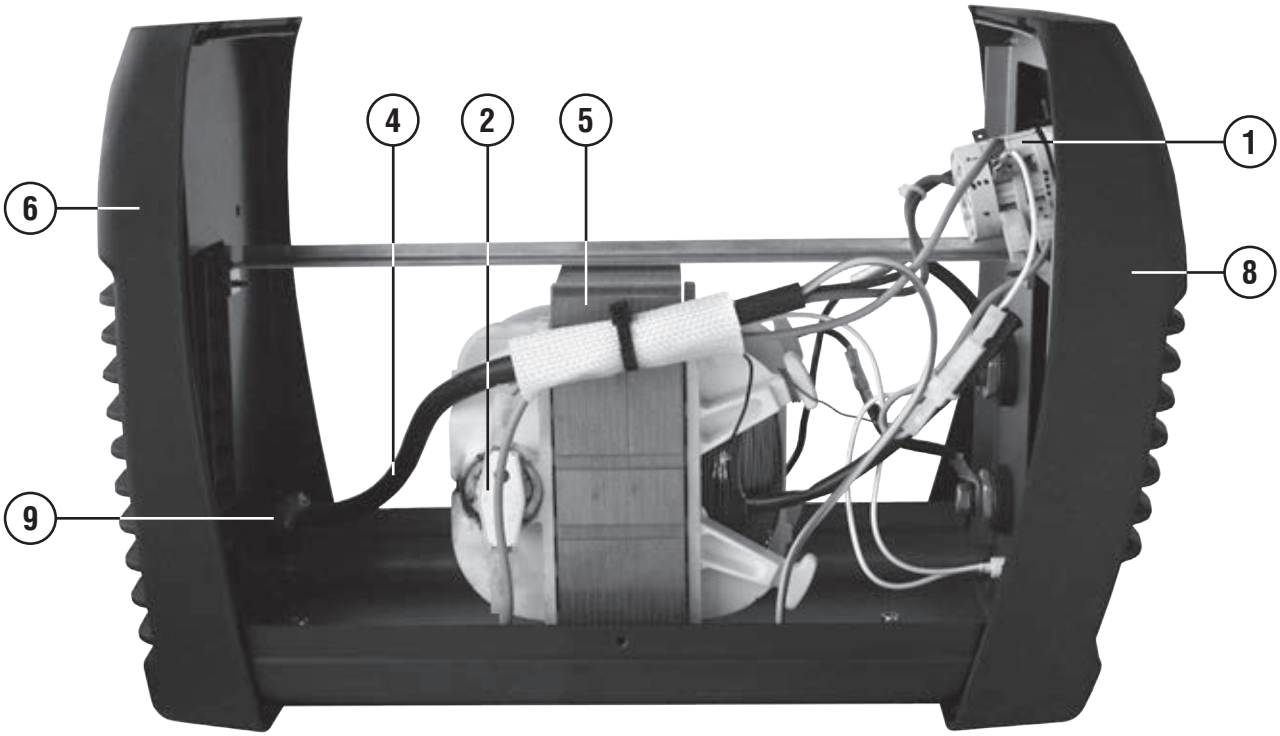

REF.	ELENCO PEZZI DI RICAMBIO PIECES DETACHEES SPARE PARTS LIST ERSATZTEILLISTE PIEZAS DE REPUESTO	CODICE CODE KODE
1	Commutatore Commutateur Switch Schalter Conmutador	121515
2	Termostato Thermostat Thermostat Thermostat Termostato	121715
3	Cavo 6mmq 1,8 m pinza di massa Cable 6mmq 1,8 m pince de masse Cable 6mmq 1,8 m and work clamp Kabel 6mmq 1,8 m massezange Cable 6mmq 1,8 m pinca de masa	125021
4	Cavo alim. 3g2.5 2 M spina schuko Cable alim. 3g2.5 2 M fiche schuko Mains cable 3g2.5 2 M schuko plug Netzkabel 3g2.5 2 M schuko stecker Cable alim. 3g2.5 2m espina schuko	132252
5	Trasformatore Transformateur Transformer Transformator Transformador	169892
6	Retro Partie arriere Back panel Rueckseite Trasera	321127
7	Manico Poignee Handle Handgriff Manija	321128
8	Frontale Partie frontal Front panel Gerätefront Frontal	321235
9	Pressacavo Presse cable Cable bushing Kabelhalter Prensa cable	322112
10	Assieme manopola per commutatore Set poigne pour commutateur Switch knob set Umschaltergriff set Set manjia para conmutador	323101
11	Presa atlas 25mmq Prise atlas 25mmq Socket atlas 25mmq Steckdose atlas 25mmq Enchufe atlas 25mmq	712035
12	Spina atlas 25mmq Fiche atlas 25mmq Atlas plug 25mmq Atlas stecker 25mmq Enchufe atlas 25mmq	712039
13	Kit impugnatura Kit poignee Handle kit Handgriffekit Kit manija	723317
14	Kit mantello Kit capot Cover kit Deckel kit Kit panel de cobertura	981849
15	Kit fondo Kit chassis Bottom kit Bodenteil kit Kit fondo	981850
16	Colorado 60b pinza di massa 60a Colorado 60b pince de masse 60a Colorado 60b work clamp 60a Colorado 60b masseklemme 60a Colorado 60b pinza de masa 60a	712361

Schema elettrico, Schéma électrique, Diagram, Schaltplan, Esquema de conexiones.

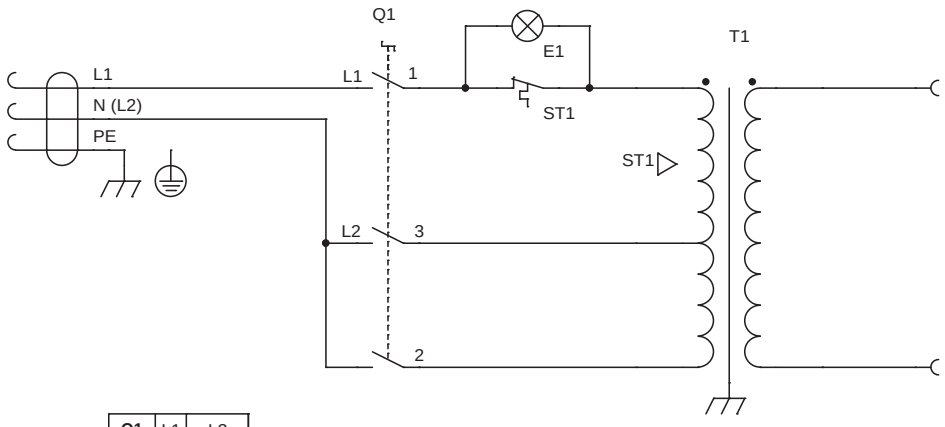

Q1	L1	L2	
MAX	X		X
0			
MIN	X	X	
	1	2	3

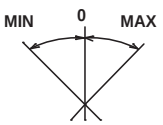

ELENCO PEZZI DI RICAMBIO
LISTE PIECES DETACHEES
SPARE PARTS LIST
ERSATZTEILLISTE
PIEZAS DE REPUESTO

TIG WELDING CLEANING KIT CT 200

Esploso macchina, Dessin appareil, Machine drawing, Explosions Zeichnung des Geräts, Diseño seccionado maquina.



REF.	ELENCO PEZZI DI RICAMBIO PIECES DETACHEES SPARE PARTS LIST ERSATZTEILLISTE PIEZAS DE REPUESTO	CODICE CODE KODE
1	Perno filettato Guopille Threaded pin Bolzen Pernio	242154
2	Liquido - brush it 1l Liquide - brush it 1l Liquid - brush it 1l Flüssigkeit - brush it 1l Líquido - brush it 1l	804030
3	Liquido - clean it 1l Liquide - clean it 1l Liquid - clean it 1l Flüssigkeit - clean it 1l Líquido - clean it 1l	804031
4	Pennelli 5 pz Brosses 5 pcs Brushes 5 pcs Bürste 5 stk Cepillos 5 pz	981863
5	Kit puntale Kit embout Tip kit Spitze kit Kit punta	981864
6	Strisce per pulizia 10pz Barres de nettoyage 10pcs Cleaning strips 10pcs Reinigungsbänder 10stk Tiras de limpieza 10pz	981866

REF.	ELENCO PEZZI DI RICAMBIO PIECES DETACHEES SPARE PARTS LIST ERSATZTEILLISTE PIEZAS DE REPUESTO	CODICE CODE KODE

REF.	ELENCO PEZZI DI RICAMBIO PIECES DETACHEES SPARE PARTS LIST ERSATZTEILLISTE PIEZAS DE REPUESTO	CODICE CODE KODE

ELENCO PEZZI DI RICAMBIO
LISTE PIECES DETACHEES
SPARE PARTS LIST
ERSATZTEILLISTE
PIEZAS DE REPUESTO

TECHNOLOGY PLASMA 41 XT

Esploso macchina, Dessin appareil, Machine drawing, Explosions Zeichnung des Geräts, Diseño seccionado maquina.



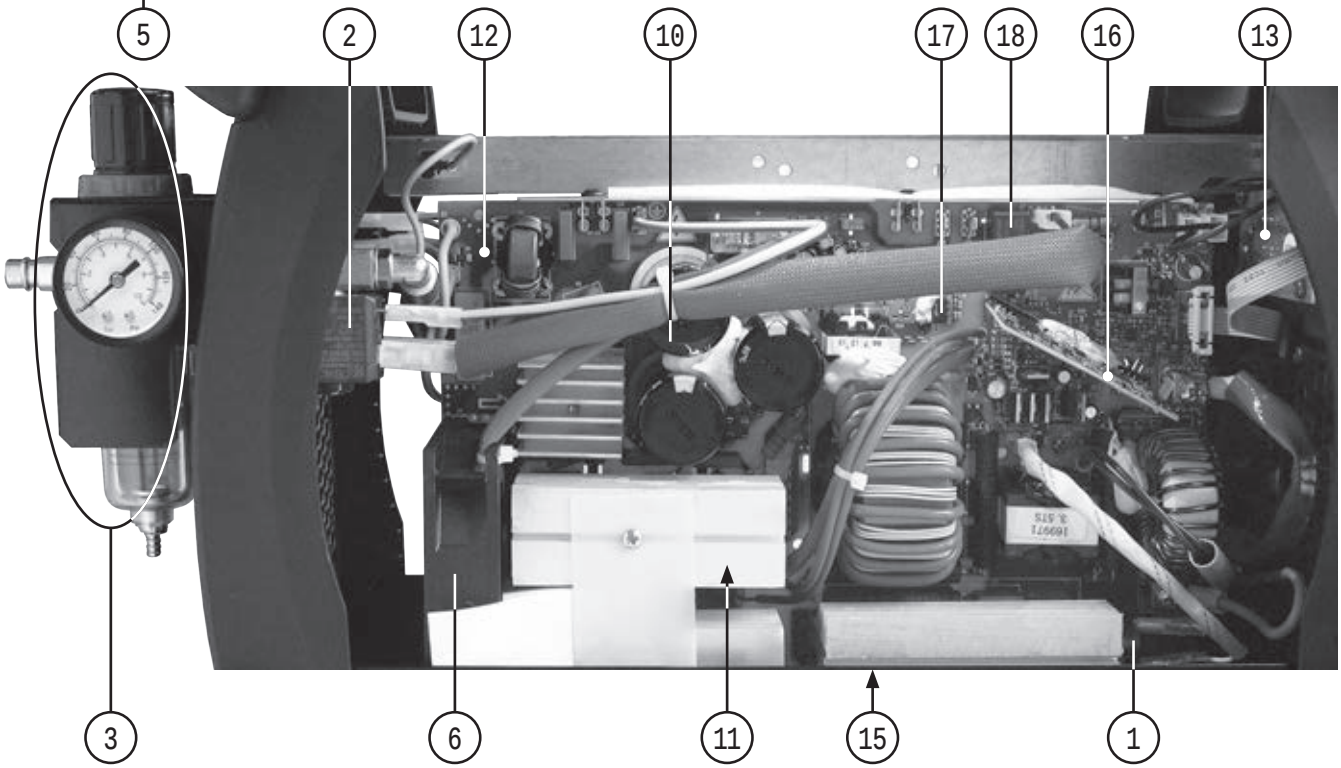

REF.	ELENCO PEZZI DI RICAMBIO PIECES DETACHEES SPARE PARTS LIST ERSATZTEILLISTE PIEZAS DE REPUESTO	CODICE CODE KODE
1	Termostato 10,0a 250v 085° 060° nc Thermostat 10,0a 250v 085° 060° nc Thermal switch 10,0a 250v 085° 060° nc Thermostat 10,0a 250v 085° 060° nc Termostato 10,0a 250v 085° 060° nc	121808
2	Elettrovalvola Electrovanne Electro valve Elektroventil Electrovalvula	122154
3	Riduttore pressione aria Reducteur de presion air Air pressure regulator Luftdruckminderer Reductor presion aire	125237
4	Cavo tw05v-f 1x006 l=03,00m atlas 25mmq Cable tw05v-f 1x006 l=03,00m atlas 25mmq Cable tw05v-f 1x006 l=03,00m atlas 25mmq Kabel tw05v-f 1x006 l=03,00m atlas 25mmq Cable tw05v-f 1x006 l=03,00m atlas 25mmq	125241
5	Cavo alim. 3g1.5 2 M spina schuko Cable alim. 3g1.5 2 M fiche schuko Mains cable 3g1.5 2 M schuko plug Netzkabel 3g1.5 2 M schuko stecker Cable alim. 3g1.5 2 M espina schuko	132155
6	Ventilatore 24vdc 92x 92x25 Ventilateur 24vdc 92x 92x25 Fan 24vdc 92x 92x25 Ventilator 24vdc 92x 92x25 Ventilador 24vdc 92x 92x25	152360
7	Toledo 300 pinza di massa 300a Toledo 300 borne de masse 300a Toledo 300 work clamp 300a Toledo 300 masseklemme 300a Toledo 300 borne de masa 300a	712231
8	Attacco torcia Attelage torche Torch connection Brenneranschluss Enganche soplete	742896
9	Ph torcia plasma 4 m Ph torche plasma 4 m Ph plasma torch 4 m Ph plasma brenner 4 m Ph antorcha plasma 4 m	804155
10	Kit condensatore snap-in Kit condensateur snap-in Condenser kit snap-in Kondensator kit snap-in Kit condensator snap-in	981584
11	Kit igbt + diodi Kit igbt + diodes Kit igbt + diodes Kit igbt + dioden Kit igbt + diodos	981588
12	Kit scheda potenza Kit carte puissance Power board kit Leistungskartekit Kit tarjeta potencia	982231
13	Kit scheda pannello Kit platine frontal Front panel card kit Gerätefrontskarte kit Kit tarjeta frontal	982232
14	Kit mantello Kit capot Cover kit Deckel kit Kit panel de cobertura	982397
15	Kit diodi 600v Kit diode 600v Diodes kit 600v Diode kit 600v Kit diodos 600v	982237
16	Kit scheda controllo Kit fiche de controle Control pcb kit Kontrollekarte kit Kit tarjeta de controlo	982238
17	Kit componenti alimentatore Kit generateur composants Kit power supply components Kit stromquelle bauteile Kit generador componentes	982248
18	Kit componenti aux. Kit composants aux. Kit aux. Components Kit aux. Bauteile Kit componentes aux.	982249
19	Kit interruttore Kit interrupteur Kit switch Kit schalter Kit interruptor	982253
20	Kit presa atlas 25mmq Kit prise atlas 25mmq Socket kit atlas 25mmq Steckdose kit 25mm Kit enchufe atlas 25mmq	982256
21	Kit potenziometro + manopole Kit potentiometre + poignees Kit potentiometer + knobs Kit potentiometer + knopfs Kit potenciometro + mandos	982259
22	Frontale bumpers Partie frontal bumpers Bumpers front panel Bumpers gerätefront Frontal bumpers	323106
23	Pressacavo Presse cable Cable bushing Kabelhalter Prensa cable	322112
24	Retro bumpers Partie arriere bumpers Bumpers back panel Bumpers rückseite Trasera bumpers	323107
25	Manico Poignee Handle Handgriff Manija	635010
26	Kit fondo Kit chassis Bottom kit Bodenteil kit Kit fondo	982408

Schema elettrico, Schéma électrique, Diagram, Schaltplan, Esquema de conexiones.

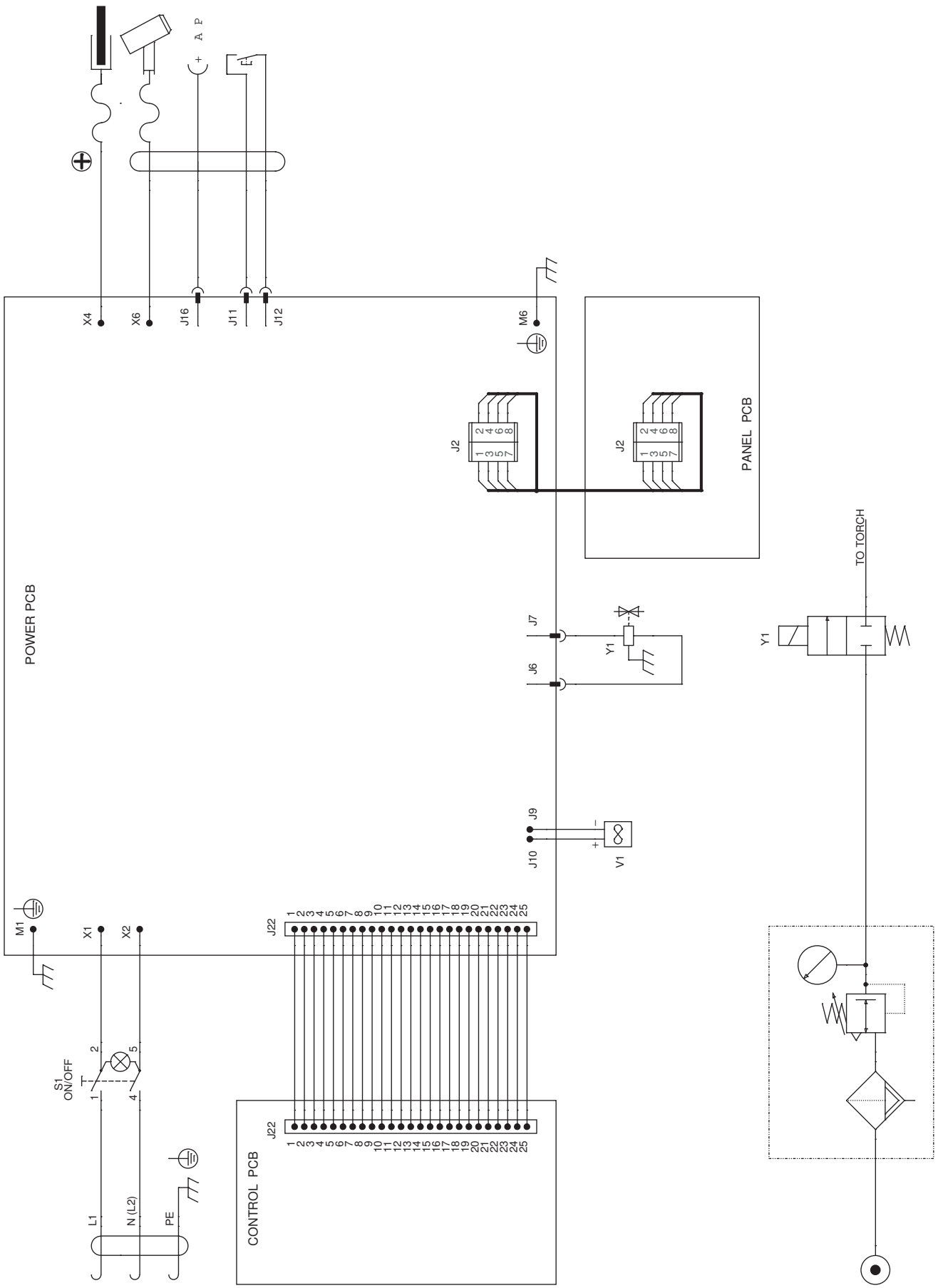

Esploso torcia, Dessin torche, Torch drawing, Schlauchpaket - Explosionszeichnung, Diseño seccionado antorcha.

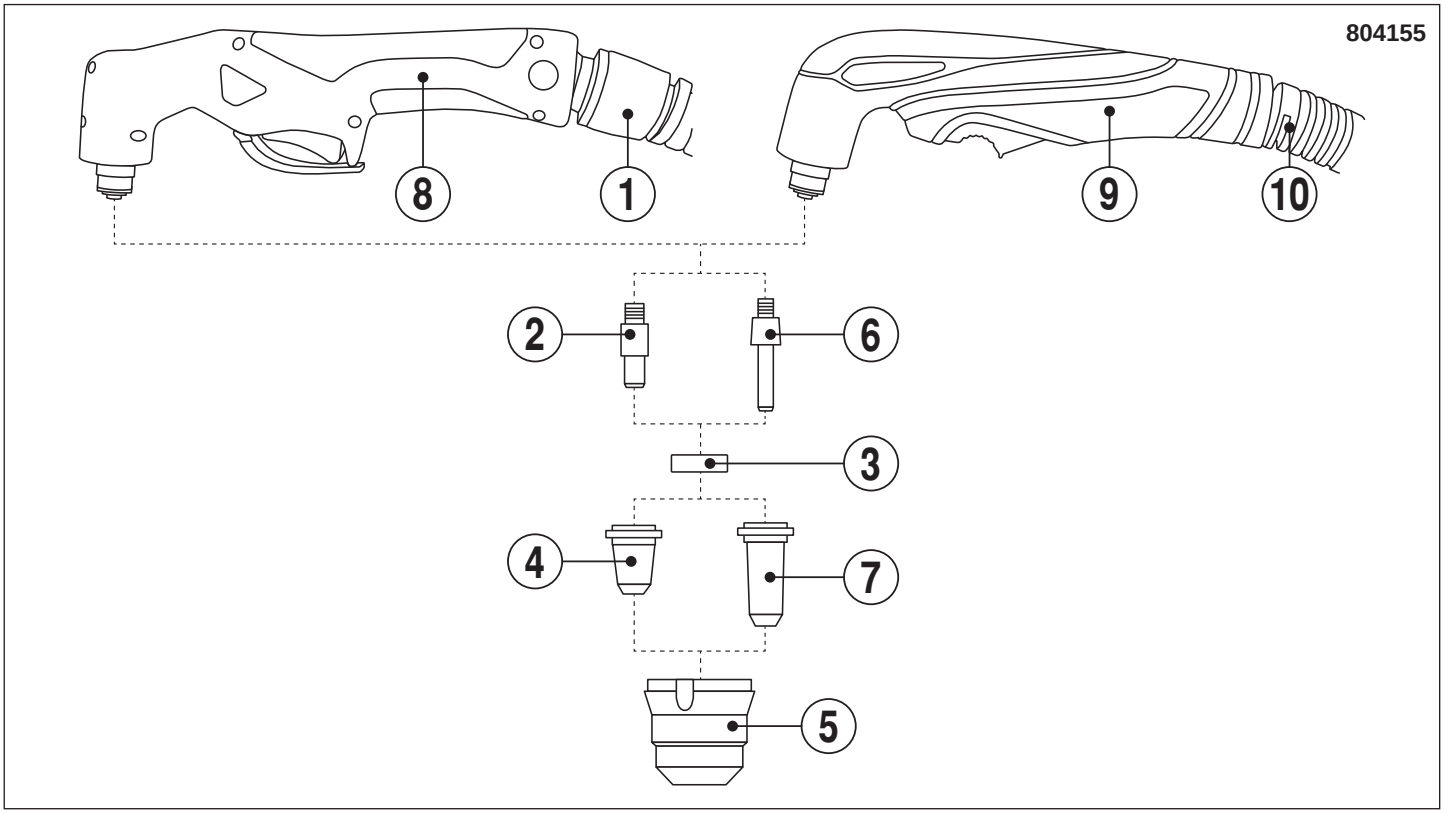

REF.	ELENCO PEZZI RICAMBIO TORCIA LISTE PIECES DETACHEES TORCHE SPARE PARTS LIST TORCH ERSATZTEILLISTE SCLAUCHPAKET PIEZAS DE REPUESTO ANTORCHA	CODICE CODE KODE
1	Passacavo Presse-cable Cable-bushing Kabeldurchgang Prensa cable	321301
2	Kit 5 elettrodi ph-pk Kit 5 electrodes ph-pk Kit 5 electrodes ph-pk Kit 5 elektroden ph-pk Kit 5 electrodos ph-pk	802420
3	Kit 5 diffusori ph-pk Kit 5 diffuseurs ph-pk Kit 5 diffusers ph-pk Kit 5 diffusoren ph-pk Kit 5 difusores ph-pk	802422
4	Kit 5 ugelli ph-pk Kit 5 becs ph-pk Kit 5 nozzles ph-pk Kit 5 düsen ph-pk Kit 5 toberas ph-pk	802423
5	Kit 2 puntali ph Kit 2 embouts ph Kit 2 safety caps ph Kit 2 schutzkappen ph Kit 2 puntales ph	802425
6	Kit 5 elettrodi prolungati ph Kit 5 electrodes prolongees ph Kit 5 long electrodes ph Kit 5 verlängerte elektroden ph Kit 5 electrodos prolongados ph	802428
7	Kit 5 ugelli prolungati ph Kit 5 buses prolongees ph Kit 5 long nozzles ph Kit 5 verlängerte düsen ph Kit 5 inyectores prolungados ph	802429
8	Kit impugnatura Kit poignee Knob kit Griff kit Kit manija	742935
9	Kit impugnatura Kit poignee Knob kit Griff kit Kit manija	742974
10	Passacavo Presse-cable Cable-bushing Kabeldurchgang Prensa cable	321476

REF.	ELENCO PEZZI RICAMBIO TORCIA LISTE PIECES DETACHEES TORCHE SPARE PARTS LIST TORCH ERSATZTEILLISTE SCLAUCHPAKET PIEZAS DE REPUESTO ANTORCHA	CODICE CODE KODE

REF.	ELENCO PEZZI RICAMBIO TORCIA LISTE PIECES DETACHEES TORCHE SPARE PARTS LIST TORCH ERSATZTEILLISTE SCLAUCHPAKET PIEZAS DE REPUESTO ANTORCHA	CODICE CODE KODE

ELENCO PEZZI DI RICAMBIO
LISTE PIECES DETACHEES
SPARE PARTS LIST
ERSATZTEILLISTE
PIEZAS DE REPUESTO

TECHNOLOGY PLASMA 54 XT KOMPRESSOR

Esploso macchina, Dessin appareil, Machine drawing, Explosions Zeichnung des Geräts, Diseño seccionado maquina.





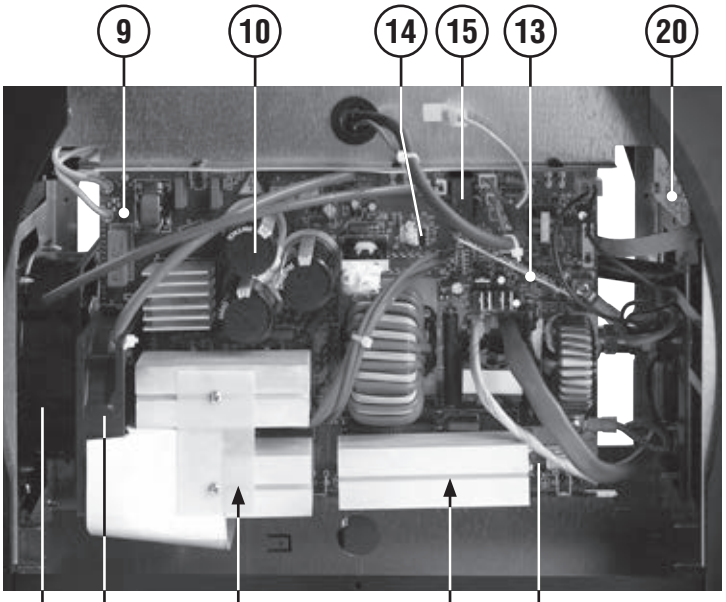

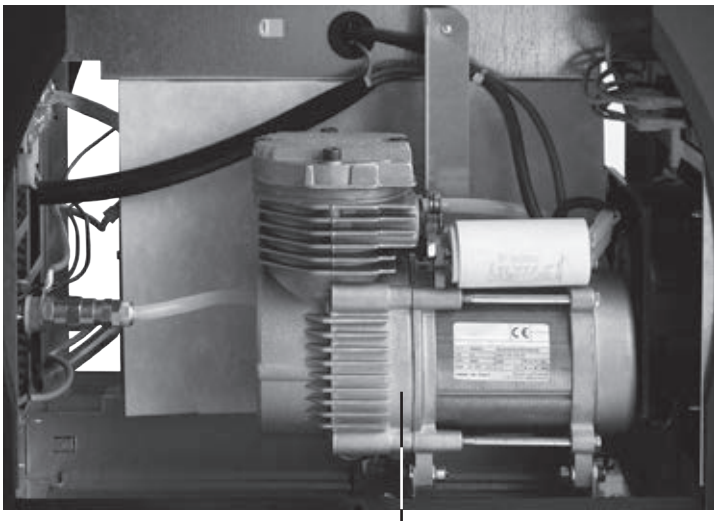

REF.	ELENCO PEZZI DI RICAMBIO PIECES DETACHEES SPARE PARTS LIST ERSATZTEILLISTE PIEZAS DE REPUESTO	CODICE CODE KODE
1	Cavo tw05v-f 1x006 l=03,00m atlas 25mmq Cable tw05v-f 1x006 l=03,00m atlas 25mmq Cable tw05v-f 1x006 l=03,00m atlas 25mmq Kabel tw05v-f 1x006 l=03,00m atlas 25mmq Cable tw05v-f 1x006 l=03,00m atlas 25mmq	125241
2	Cavo alim. 3g1.5 2 M spina schuko Cable alim. 3g1.5 2 M fiche schuko Mains cable 3g1.5 2 M schuko plug Netzkabel 3g1.5 2 M schuko stecker Cable alim. 3g1.5 2 M espina schuko	132155
3	Ventilatore Ventilateur Fan Ventilator Ventilador	152149
4	Ventilatore 24vdc 92x 92x25 Ventilateur 24vdc 92x 92x25 Fan 24vdc 92x 92x25 Ventilator 24vdc 92x 92x25 Ventilador 24vdc 92x 92x25	152360
5	Toledo 300 pinza di massa 300a Toledo 300 borne de masse 300a Toledo 300 work clamp 300a Toledo 300 masseklemme 300a Toledo 300 borne de masa 300a	712231
6	Attacco torcia Attelage torche Torch connection Brenneranschluss Enganche soplete	742896
7	Pk torcia plasma 4 m Pk torche plasma 4 m Pk plasma torch 4 m Pk plasma brenner 4 m Pk antorcha plasma 4 m	804156
8	Kit compressore Kit compresseur Compressor kit Kompresso kit Kit compresor	980256
9	Kit scheda potenza Kit carte puissance Power board kit Leistungskartekit Kit tarjeta potencia	982231
10	Kit condensatore snap-in Kit condensateur snap-in Condenser kit snap-in Kondensator kit snap-in Kit condensator snap-in	981584
11	Kit igbt + diodi Kit igbt + diodes Kit igbt + diodes Kit igbt + dioden Kit igbt + diodos	981588
12	Kit diodi 600v Kit diode 600v Diodes kit 600v Diode kit 600v Kit diodos 600v	982237
13	Kit scheda controllo Kit fiche de controle Control pcb kit Kontrollekarte kit Kit tarjeta de controlo	982238
14	Kit componenti alimentatore Kit generateur composants Kit power supply components Kit stromquelle bauteile Kit generador componentes	982248
15	Kit componenti aux. Kit composants aux. Kit aux. Components Kit aux. Bauteile Kit componentes aux.	982249
16	Kit mantello Kit capot Cover kit Deckel kit Kit panel de cobertura	982401
17	Frontale bumpers + rete Partie frontal bumpers + reseau Front bumpers + net Front bumpers + netz Frontal bumpers + red	323109
18	Kit interruttore Kit interrupteur Kit switch Kit schalter Kit interruptor	982253
19	Kit potenziometro Kit potentiometre Kit potentiometer Kit potentiometer Kit potenciometro	982254
20	Kit scheda pannello Kit platine frontal Front panel card kit Gerätefrontskarte kit Kit tarjeta frontal	982255
21	Kit presa atlas 25mmq Kit prise atlas 25mmq Socket kit atlas 25mmq Steckdose kit 25mm Kit enchufe atlas 25mmq	982256
22	Termostato 10,0a 250v 085° 060° nc Thermostat 10,0a 250v 085° 060° nc Thermal switch 10,0a 250v 085° 060° nc Thermostat 10,0a 250v 085° 060° nc Termostato 10,0a 250v 085° 060° nc	121808
23	Pressacavo Presse cable Cable bushing Kabelhalter Prensa cable	322112
24	Retro bumpers + rete Partie arriere bumpers + reseau Back bumpers + net Rückbumpers + netz Trasera bumpers + red	323110
25	Manico Poignee Handle Handgriff Manija	635012
26	Kit fondo Kit chassis Bottom kit Bodenteil kit Kit fondo	982409

Schema elettrico, Schéma électrique, Diagram, Schaltplan, Esquema de conexiones.

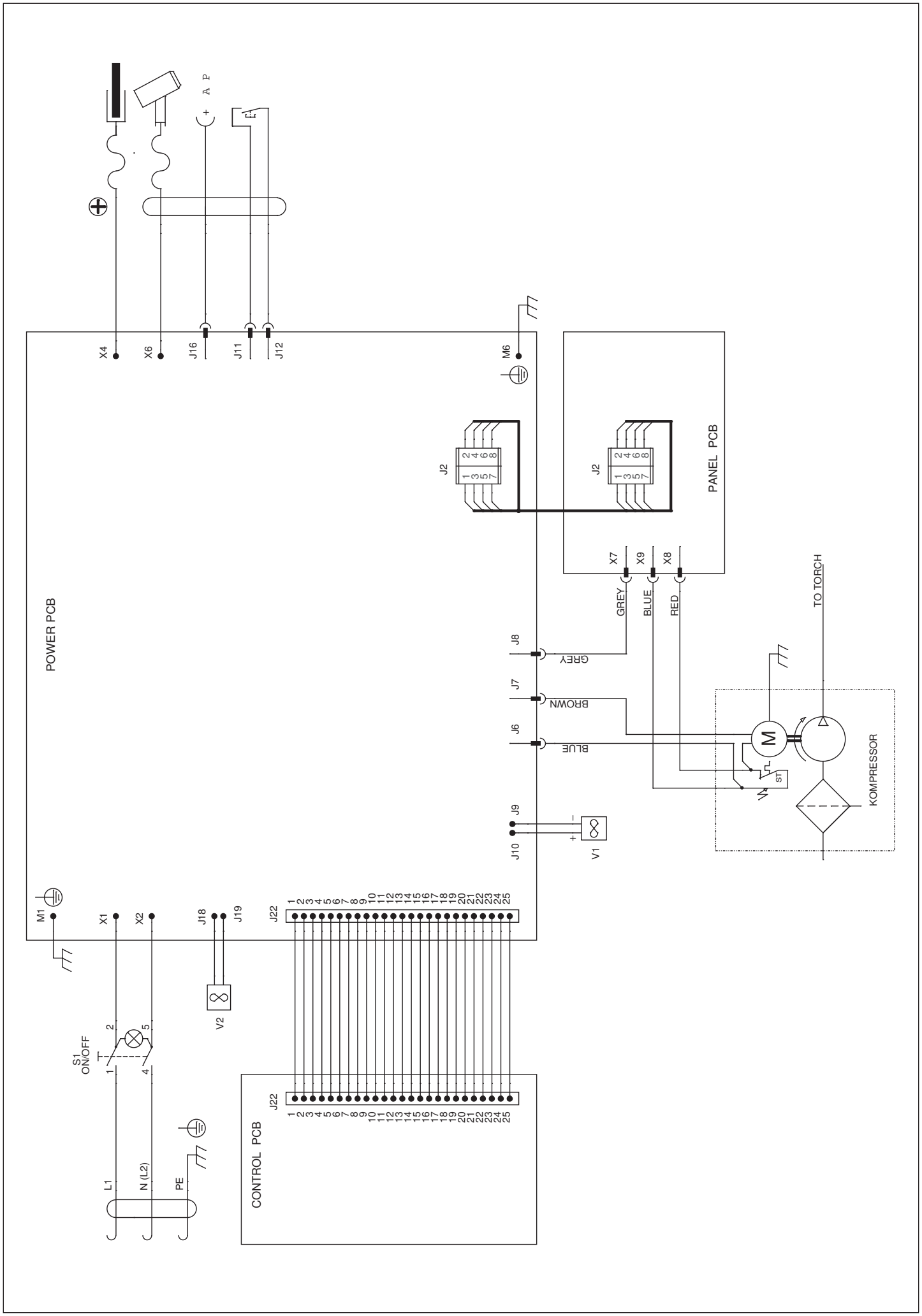

Esploso torcia, Dessin torche, Torch drawing, Schlauchpaket - Explosionszeichnung, Diseño seccionado antorcha.

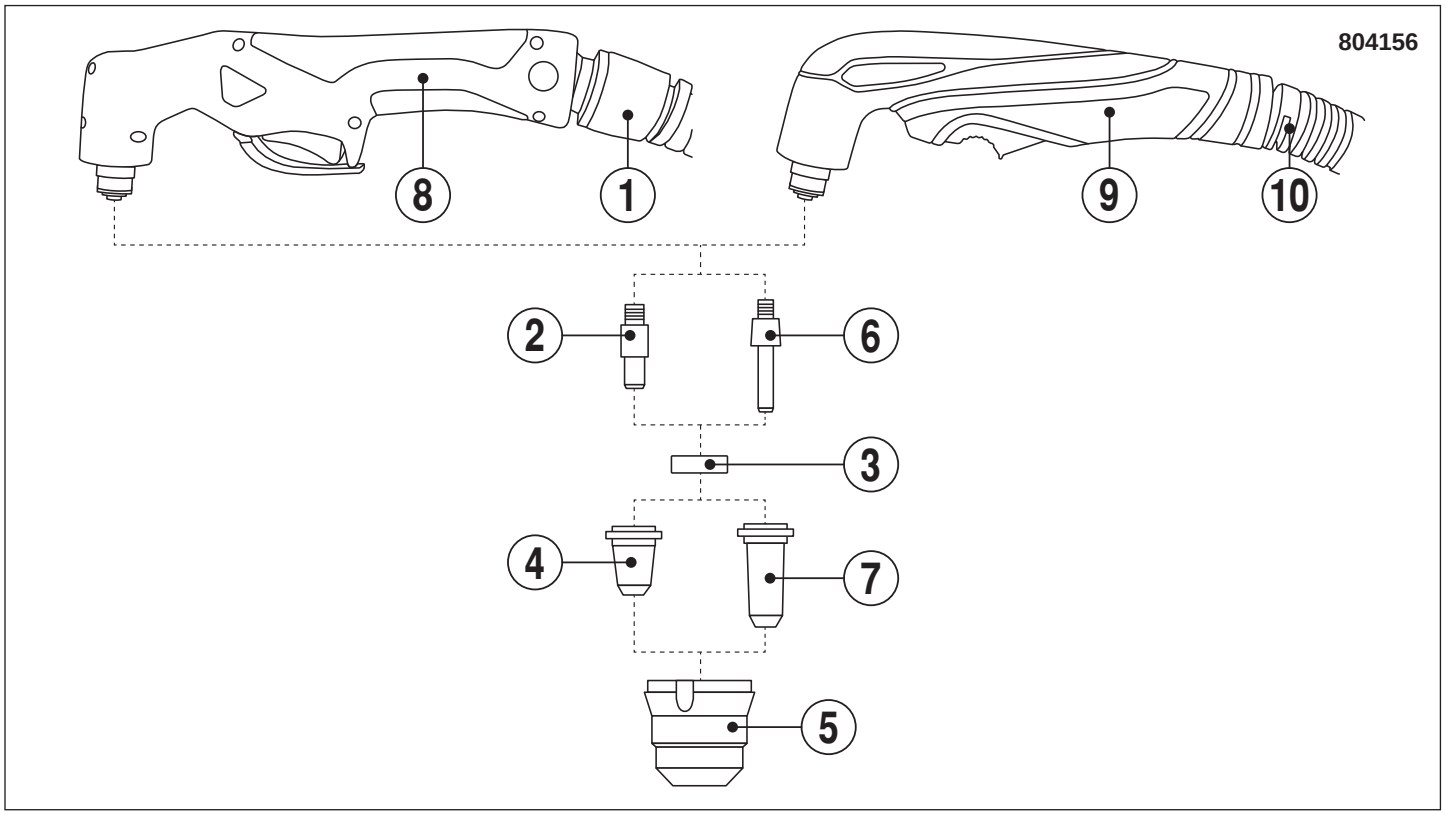

REF.	ELENCO PEZZI RICAMBIO TORCIA LISTE PIECES DETACHEES TORCHE SPARE PARTS LIST TORCH ERSATZTEILLISTE SCLAUCHPAKET PIEZAS DE REPUESTO ANTORCHA	CODICE CODE KODE
1	Passacavo Presse-cable Cable-bushing Kabeldurchgang Prensa cable	321301
2	Kit 5 elettrodi ph-pk Kit 5 electrodes ph-pk Kit 5 electrodes ph-pk Kit 5 elektroden ph-pk Kit 5 electrodos ph-pk	802420
3	Kit 5 diffusori ph-pk Kit 5 diffuseurs ph-pk Kit 5 diffusers ph-pk Kit 5 diffusoren ph-pk Kit 5 difusores ph-pk	802422
4	Kit 5 ugelli ph-pk Kit 5 becs ph-pk Kit 5 nozzles ph-pk Kit 5 düsen ph-pk Kit 5 toberas ph-pk	802423
5	Kit 2 puntali pk Kit 2 embouts pk Kit 2 safety caps pk Kit 2 schutzkappen pk Kit 2 puntales pk	802485
6	Kit 5 elettrodi prolungati ph Kit 5 electrodes prolongees ph Kit 5 long electrodes ph Kit 5 verlängerte elektroden ph Kit 5 electrodos prolongados ph	802428
7	Kit 5 ugelli prolungati ph Kit 5 buses prolongees ph Kit 5 long nozzles ph Kit 5 verlängerte düsen ph Kit 5 inyectores prolungados ph	802429
8	Kit impugnatura Kit poignee Knob kit Griff kit Kit manija	742935
9	Kit impugnatura Kit poignee Knob kit Griff kit Kit manija	742974
10	Passacavo Presse-cable Cable-bushing Kabeldurchgang Prensa cable	321476

REF.	ELENCO PEZZI RICAMBIO TORCIA LISTE PIECES DETACHEES TORCHE SPARE PARTS LIST TORCH ERSATZTEILLISTE SCLAUCHPAKET PIEZAS DE REPUESTO ANTORCHA	CODICE CODE KODE

REF.	ELENCO PEZZI RICAMBIO TORCIA LISTE PIECES DETACHEES TORCHE SPARE PARTS LIST TORCH ERSATZTEILLISTE SCLAUCHPAKET PIEZAS DE REPUESTO ANTORCHA	CODICE CODE KODE

ELENCO PEZZI DI RICAMBIO
LISTE PIECES DETACHEES
SPARE PARTS LIST
ERSATZTEILLISTE
PIEZAS DE REPUESTO

TECHNOLOGY PLASMA 60 XT

TELWIN®

Esploso macchina, Dessin appareil, Machine drawing, Explosions Zeichnung des Geräts, Diseño seccionado maquina.

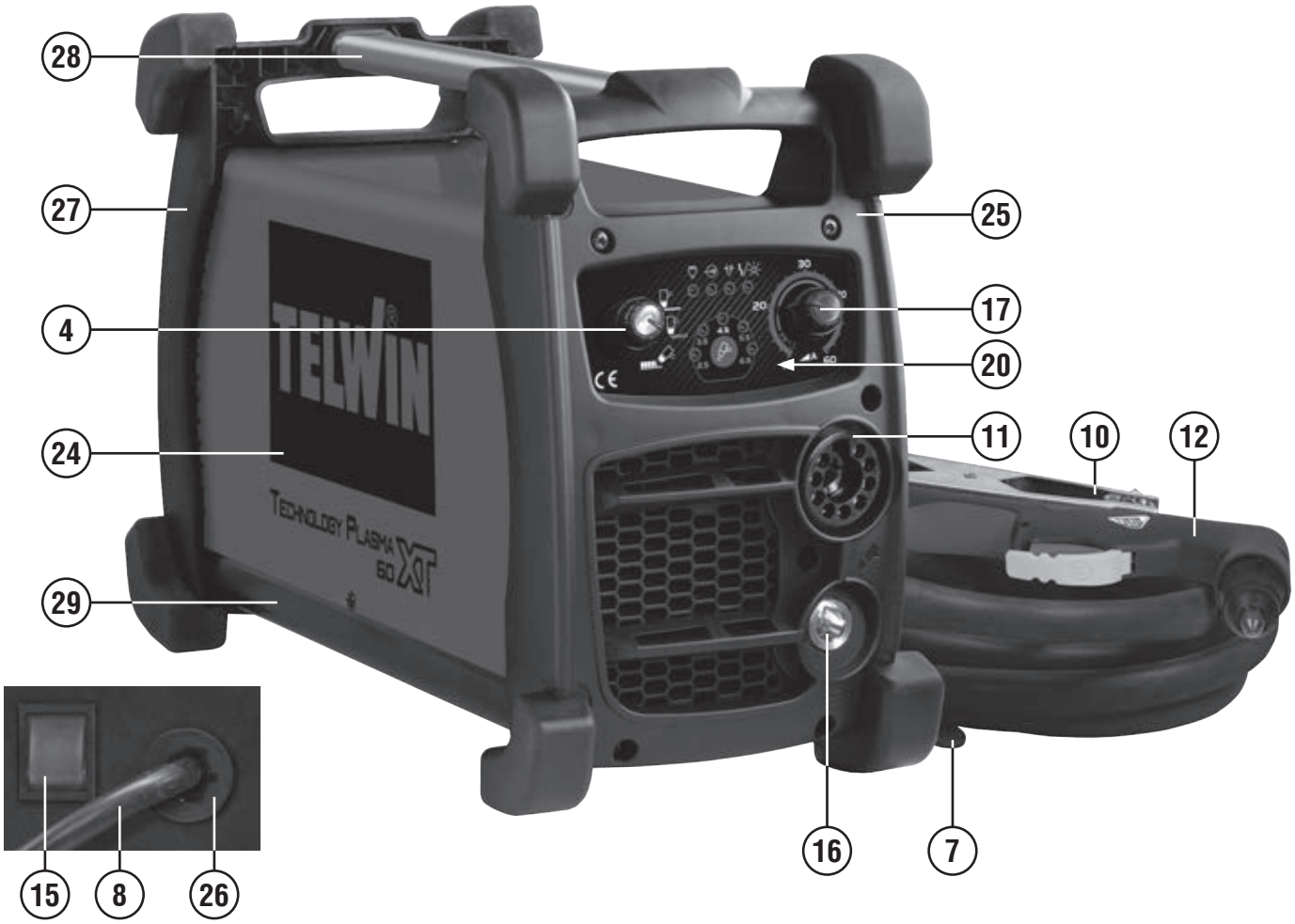

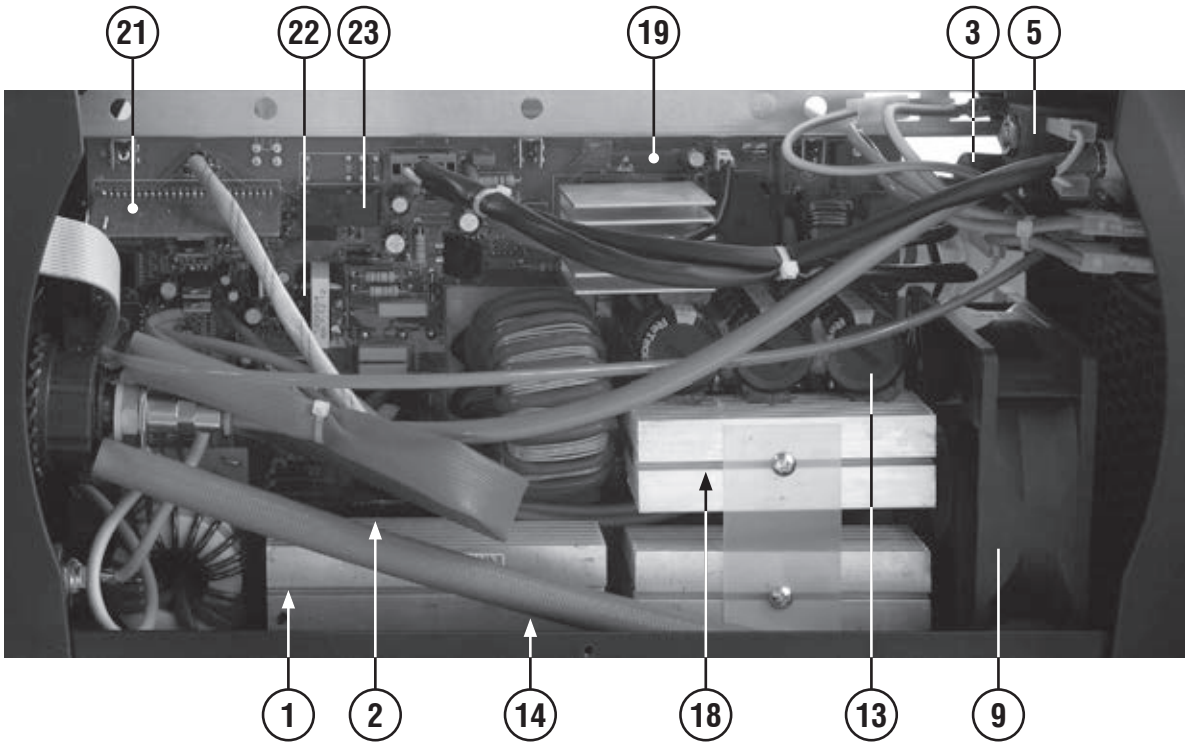



REF.	ELENCO PEZZI DI RICAMBIO PIECES DETACHEES SPARE PARTS LIST ERSATZTEILLISTE PIEZAS DE REPUESTO	CODICE CODE KODE
1	Igbt 40a 650v to247 cn Igbt 40a 650v to247 cn Igbt 40a 650v to247 cn Igbt 40a 650v to247 cn Igbt 40a 650v to247 cn	111420
2	Termostato Thermostat Thermostat Thermostat Termostato	121748
3	Pressostato Pressostat Pressure switch Druckanzeige Presostato	121750
4	Kit commutatore + manopola Kit commutateur + poignee Switch + knob kit Schalter + knopf kit Kit conmutador + manjia	982270
5	Elettrovalvola Electrovanne Electro valve Elektroventil Electrovalvula	122154
6	Riduttore pressione aria Reducteur de presion air Air pressure regulator Luftdruckminderer Reductor presion aire	125237
7	Cavo tw05v-f 1x006 l=03,00m atlas 25mmq Cable tw05v-f 1x006 l=03,00m atlas 25mmq Cable tw05v-f 1x006 l=03,00m atlas 25mmq Kabel tw05v-f 1x006 l=03,00m atlas 25mmq Cable tw05v-f 1x006 l=03,00m atlas 25mmq	125241
8	Cavo alim. 3g04.00 2.00 M Cable alim. 3g04.00 2.00 M Mains cable 3g04.00 2.00 M Netzkabel 3g04.00 2.00 M Cable alim. 3g04.00 2.00 M	132345
9	Ventilatore Ventilateur Fan Ventilator Ventilador	152290
10	Toledo 300 pinza di massa 300a Toledo 300 borne de masse 300a Toledo 300 work clamp 300a Toledo 300 masseklemme 300a Toledo 300 borne de masa 300a	712231
11	Attacco torcia Attelage torche Torch connection Brenneranschluss Enganche soplete	742896
12	Ph torcia plasma 4 m Ph torche plasma 4 m Ph plasma torch 4 m Ph plasma brenner 4 m Ph antorcha plasma 4 m	804155
13	Kit condensatore snap-in Kit condensateur snap-in Condenser kit snap-in Kondensator kit snap-in Kit condensator snap-in	981584
14	Kit diodi 600v Kit diode 600v Diodes kit 600v Diode kit 600v Kit diodos 600v	982237
15	Kit interruttore Kit interrupteur Kit switch Kit schalter Kit interruptor	982253
16	Kit presa atlas 25mmq Kit prise atlas 25mmq Socket kit atlas 25mmq Steckdose kit 25mm Kit enchufe atlas 25mmq	982256
17	Kit potenziometro + manopole Kit potentiometre + poignees Kit potentiometer + knobs Kit potentiometer + knopfs Kit potenciometro + mandos	982259
18	Kit igbt + driver Kit igbt + driver Kit igbt + driver Kit igbt + driver Kit igbt + driver	982261
19	Kit scheda potenza Kit carte puissance Power board kit Leistungskartekit Kit tarjeta potencia	982262
20	Kit scheda pannello Kit platine frontal Front panel card kit Gerätefrontskarte kit Kit tarjeta frontal	982263
21	Kit scheda controllo Kit fiche de controle Control pcb kit Kontrollekarte kit Kit tarjeta de controlo	982264
22	Kit componenti alimentatore Kit generateur composants Kit power supply components Kit stromquelle bauteile Kit generador componentes	982265
23	Kit componenti aux. Kit composants aux. Kit aux. Components Kit aux. Bauteile Kit componentes aux.	982266
24	Kit mantello Kit capot Cover kit Deckel kit Kit panel de cobertura	982406
25	Frontale bumpers Partie frontal bumpers Bumpers front panel Bumpers gerätefront Frontal bumpers	323106
26	Kit pressacavo + ghiera Kit presse cable + embout Kit cable bushing + ring nut Kit kabelhalter + nutmutter Kit prensa cable + virola	990046
27	Retro bumpers Partie arriere bumpers Bumpers back panel Bumpers rückseite Trasera bumpers	323107
28	Manico Poignee Handle Handgriff Manija	635011
29	Kit fondo Kit chassis Bottom kit Bodenteil kit Kit fondo	982410

Schema elettrico, Schéma électrique, Diagram, Schaltplan, Esquema de conexiones.

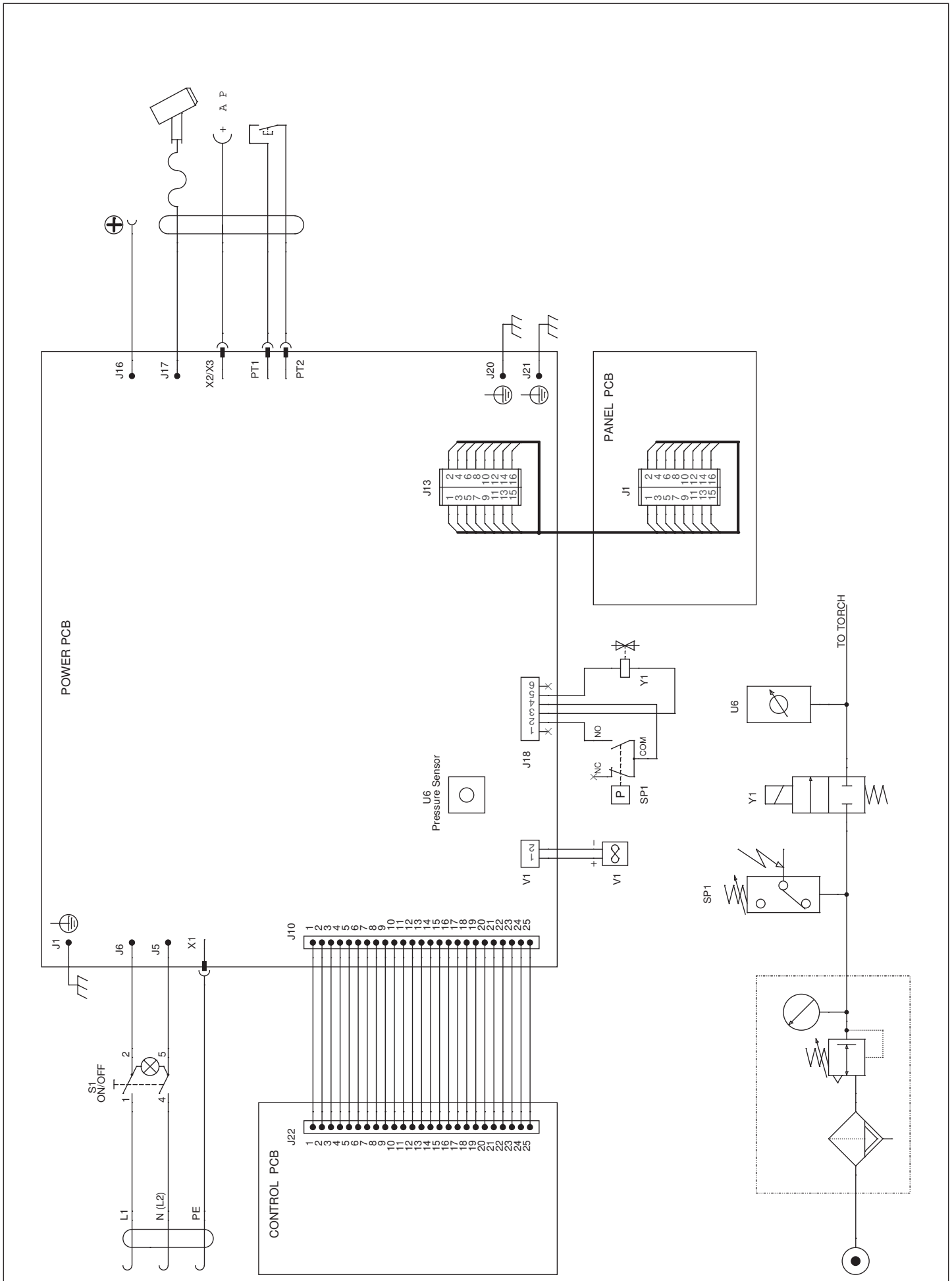

Esploso torcia, Dessin torche, Torch drawing, Schlauchpaket - Explosionszeichnung, Diseño seccionado antorcha.

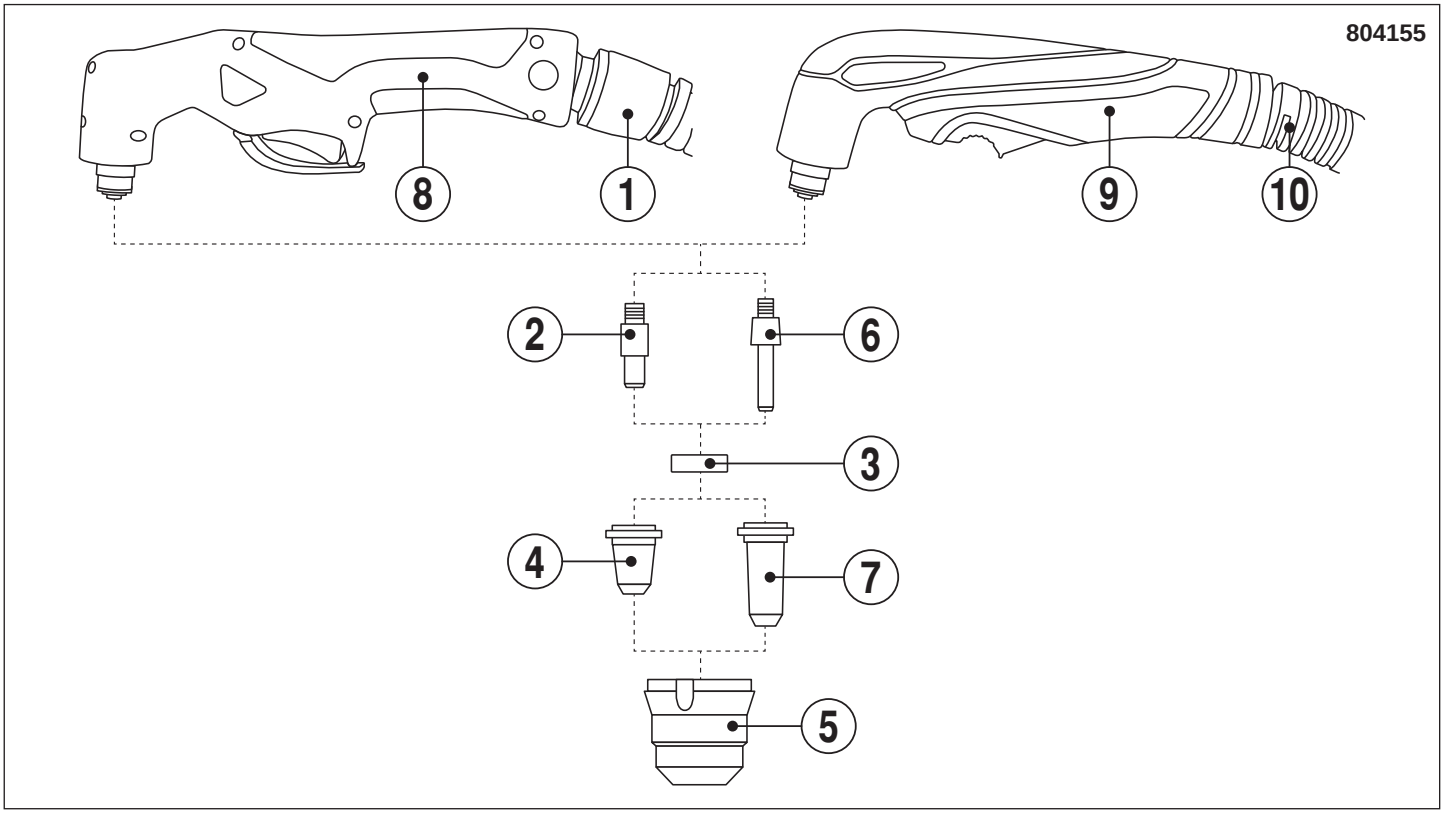

REF.	ELENCO PEZZI RICAMBIO TORCIA LISTE PIECES DETACHEES TORCHE SPARE PARTS LIST TORCH ERSATZTEILLISTE SCLAUCHPAKET PIEZAS DE REPUESTO ANTORCHA	CODICE CODE KODE
1	Passacavo Presse-cable Cable-bushing Kabeldurchgang Prensa cable	321301
2	Kit 5 elettrodi ph-pk Kit 5 electrodes ph-pk Kit 5 electrodes ph-pk Kit 5 elektroden ph-pk Kit 5 electrodos ph-pk	802420
3	Kit 5 diffusori ph-pk Kit 5 diffuseurs ph-pk Kit 5 diffusers ph-pk Kit 5 diffusoren ph-pk Kit 5 difusores ph-pk	802422
4	Kit 5 ugelli ph-pk Kit 5 becs ph-pk Kit 5 nozzles ph-pk Kit 5 düsen ph-pk Kit 5 toberas ph-pk	802423
5	Kit 2 puntali ph Kit 2 embouts ph Kit 2 safety caps ph Kit 2 schutzkappen ph Kit 2 puntales ph	802425
6	Kit 5 elettrodi prolungati ph Kit 5 electrodes prolongees ph Kit 5 long electrodes ph Kit 5 verlängerte elektroden ph Kit 5 electrodos prolongados ph	802428
7	Kit 5 ugelli prolungati ph Kit 5 buses prolongees ph Kit 5 long nozzles ph Kit 5 verlängerte düsen ph Kit 5 inyectores prolungados ph	802429
8	Kit impugnatura Kit poignee Knob kit Griff kit Kit manija	742935
9	Kit impugnatura Kit poignee Knob kit Griff kit Kit manija	742974
10	Passacavo Presse-cable Cable-bushing Kabeldurchgang Prensa cable	321476

REF.	ELENCO PEZZI RICAMBIO TORCIA LISTE PIECES DETACHEES TORCHE SPARE PARTS LIST TORCH ERSATZTEILLISTE SCLAUCHPAKET PIEZAS DE REPUESTO ANTORCHA	CODICE CODE KODE

REF.	ELENCO PEZZI RICAMBIO TORCIA LISTE PIECES DETACHEES TORCHE SPARE PARTS LIST TORCH ERSATZTEILLISTE SCLAUCHPAKET PIEZAS DE REPUESTO ANTORCHA	CODICE CODE KODE

ELENCO PEZZI DI RICAMBIO
LISTE PIECES DETACHEES
SPARE PARTS LIST
ERSATZTEILLISTE
PIEZAS DE REPUESTO

SUPERIOR PLASMA 70

TELWIN

Esploso macchina, Dessin appareil, Machine drawing, Explosions Zeichnung des Geräts, Diseño seccionado maquina.

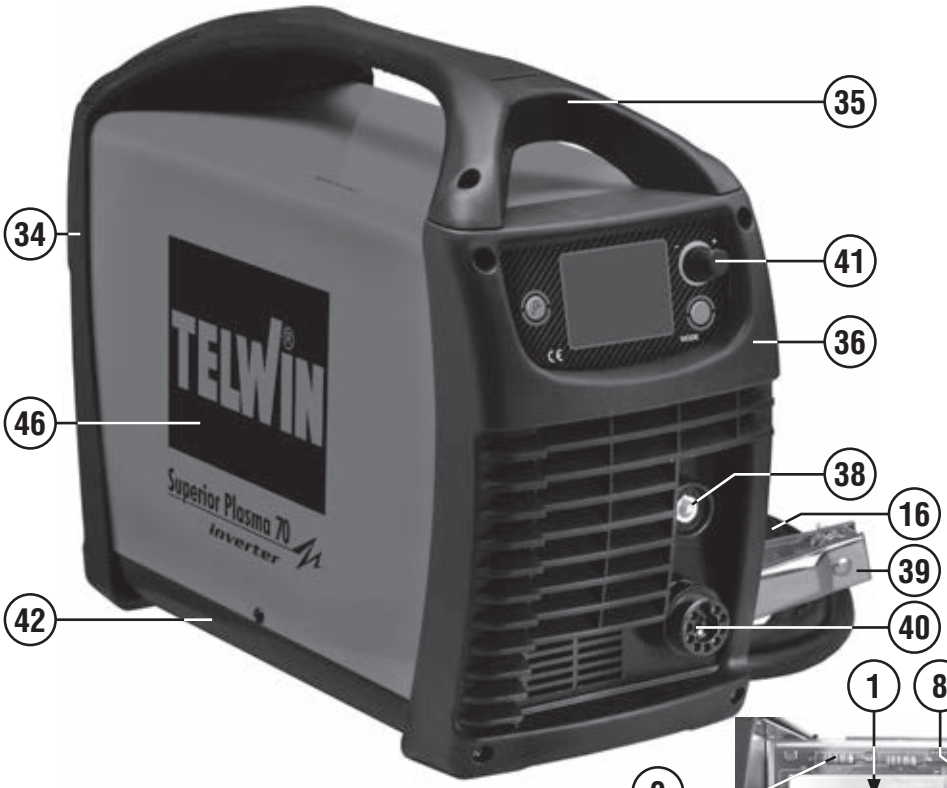

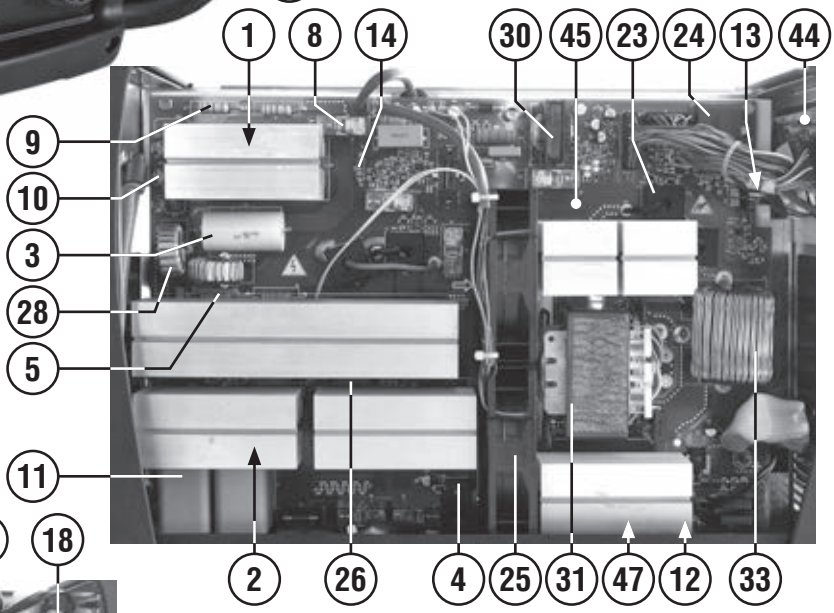

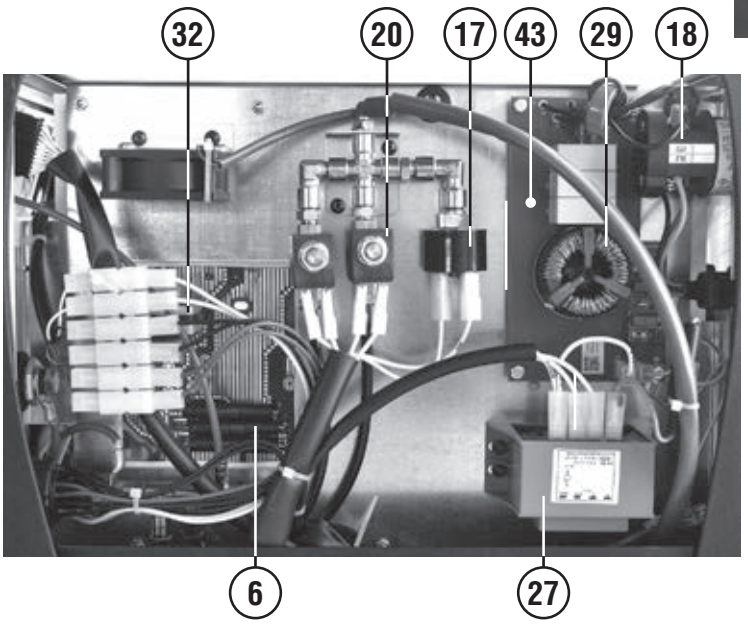

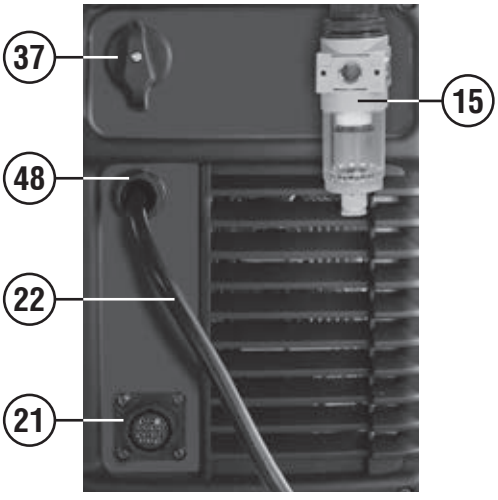

REF.	ELENCO PEZZI DI RICAMBIO PIECES DETACHEES SPARE PARTS LIST ERSATZTEILLISTE PIEZAS DE REPUESTO	CODICE CODE KODE
1	Ponte monofase Pont monophase Single phase bridge Einfasige brücke Puente monofasico	111017
2	Igbt Igbt Igbt Igbt Igbt	111094
3	Condensatore Condensateur Condenser Kondensator Condensator	111099
4	Opto-accoppiatore cny64b 4pin Opto-accoupler cny64b 4pin Opto-coupler cny64b 4pin Opto-koppler cny64b 4pin Opto-acoplador cny64b 4pin	111135
5	Res. Met. 22r 5w 5% Res. Met. 22r 5w 5% Res. Met. 22r 5w 5% Res. Met. 22r 5w 5% Res. Met. 22r 5w 5%	111327
6	Resistenza Resistance Resistance Wiederstand Resistencia	111475
8	Rele' Relais Relais Relais Relais	116320
9	Resistenza Resistance Resistance Widerstand Resistencia	116752
10	Varistore Varistor Varistor Varistor Varistor	116760
11	Condensatore Condensateur Condenser Kondensator Condensator	116882
12	Igbt Igbt Igbt Igbt Igbt	116853
13	Opto-accoppiatore Opto-accoupler Opto-coupler Opto-koppler Opto-acoplador	116909
14	Res. Met. 10r 2w 5% fuse Res. Met. 10r 2w 5% fuse Res. Met. 10r 2w 5% fuse Res. Met. 10r 2w 5% fuse Res. Met. 10r 2w 5% fuse	116962
15	Riduttore pressione aria Reducteur de presion air Air pressure regulator Luftdruckminderer Reductor presion aire	120203
16	Cavo 10 mmq 5 m - atlas 25mmq Cable 10 mmq 5 m - atlas 25mmq Cable 10 mmq 5 m - atlas 25mmq Kabel 10 mmq 5 m - atlas 25mmq Cable 10 mmq 5 m - atlas 25mmq	120248
17	Pressostato Pressostat Pressure switch Druckanzeige Presostato	121750
18	Commutatore Commutateur Switch Schalter Switch	121556
20	Elettrovalvola Electrovanne Electrovalve Elektroventil Electrovalvula	121800
21	Cablaggio comando a distanza Cable pour commande a distance Cable for remote control Fernreglerkabel Cable para mando a distancia	125081
22	Cavo alim. 4g1.5 2 M Cable alim. 4g1.5 2 M Mains cable 4g1.5 2 M Netzkabel 4g1.5 2 M Cable alim. 4g1.5 2 M	132237
23	Trasformatore di corrente Transformateur de courant Current transformer Stromwandler Transformador de corriente	152230
24	Trasformatore impulsi Transformateur d'impulsions Impulse transformer Impuls-transformator Transformador de impulsos	152268
25	Ventilatore Ventilateur Fan Ventilator Ventilador	152269
26	Trasformatore impulsi Transformateur d'impulsions Impulse transformer Impuls-transformator Transformador de impulsos	152291
27	Autotrasformatore Autotransformateur Autotransformer Autotransformator Autotransformador	169116
28	Induttanza Inductance Inductance Drossel Induccion	169746
29	Induttanza filtro Inductance filtre Filter inductor Filterdrossel Filtro induccion	169747
30	Trasfo flyback aux Trasfo flyback aux Trasfo flyback aux Trasfo flyback aux Trasfo flyback aux	169838
31	Trasformatore potenza Transformateur de puissance Power trafo Leistungstransformer Transformador de potencia	169864
32	Induttanza Inductance Inductance Drossel Induccion	169926
33	Induttanza Inductance Inductance Drossel Induccion	169930
34	Retro Partie arriere Back panel Rueckseite Trasera	321118
35	Manico Poignee Handle Handgriff Manija	321119
36	Frontale Partie frontal Front panel Gerätefront Frontal	321202
37	Assieme manopola per commutatore Set poigne pour commutateur Switch knob set Umschaltergriff set Set manjia para conmutador	323101
38	Presa atlas 25mmq Prise atlas 25mmq Socket atlas 25mmq Steckdose atlas 25mmq Enchufe atlas 25mmq	712035
39	Toledo 300 pinza di massa 300a Toledo 300 borne de masse 300a Toledo 300 work clamp 300a Toledo 300 masseklemme 300a Toledo 300 borne de masa 300a	712231
40	Attacco torcia Attelage torche Torch connection Brenneranschluss Enganche soplete	742642
41	Kit manopola encoder Kit poignee encoder Encoder knob kit Encodergriff kit Kit manija encoder	980520
42	Kit fondo Kit chassis Bottom kit Bodenteil kit Kit fondo	981408
43	Kit scheda filtro Kit platine filtre Filter card kit Filterkartekit Kit tarjeta filtro	981678
44	Kit scheda pannello Kit platine frontal Front panel card kit Gerätefrontskarte kit Kit tarjeta frontal	981918
45	Kit scheda potenza Kit carte puissance Power board kit Leistungskartekit Kit tarjeta potencia	981919
46	Kit mantello Kit capot Cover kit Deckel kit Kit panel de cobertura	981920
47	Kit diodi Kit diodes Diodes kit Dioden kit Kit diodos	981958
48	Kit pressacavo + ghiera Kit presse cable + embout Kit cable bushing + ring nut Kit kabelhalter + nutmutter Kit prensa cable + virola	990046

Schema elettrico, Schéma électrique, Diagram, Schaltplan, Esquema de conexiones.

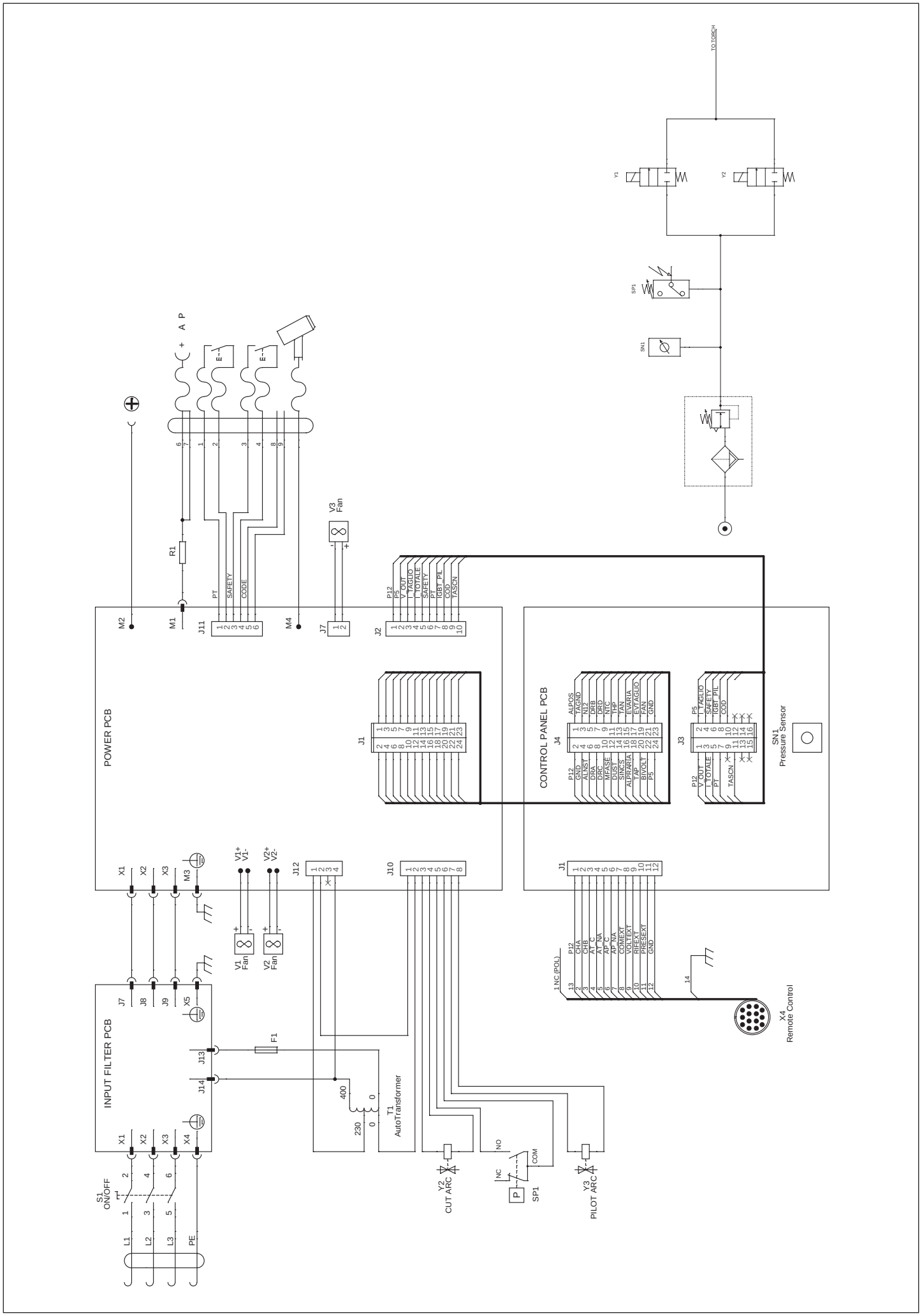

Esploso torcia, Dessin torche, Torch drawing, Schlauchpaket - Explosionszeichnung, Diseño seccionado antorcha.

742712

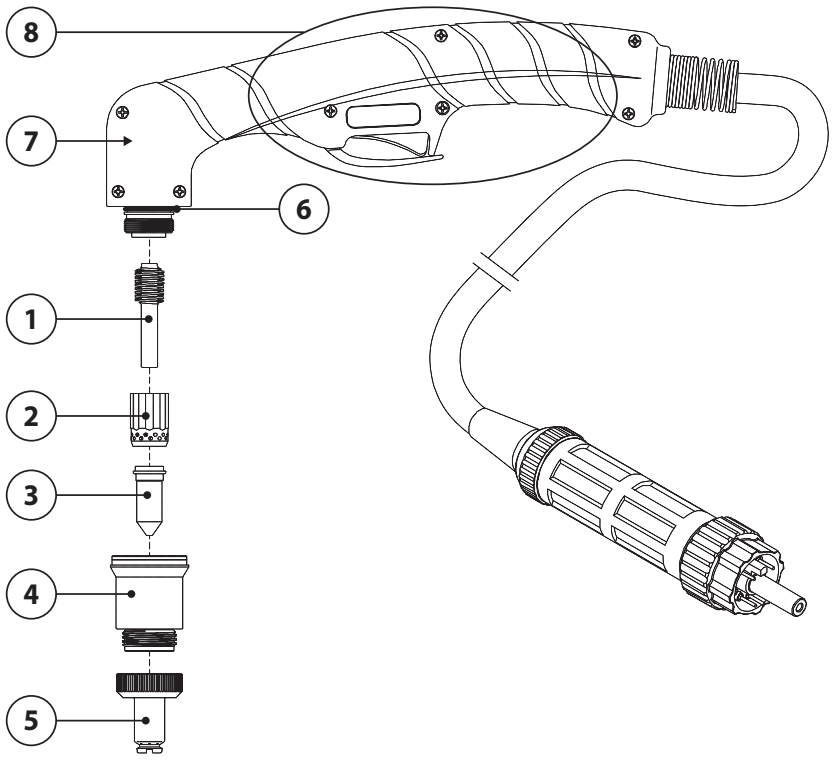

REF.	ELENCO PEZZI RICAMBIO TORCIA LISTE PIECES DETACHEES TORCHE SPARE PARTS LIST TORCH ERSATZTEILLISTE SCLAUCHPAKET PIEZAS DE REPUESTO ANTORCHA	CODICE CODE KODE
1	Kit 5 elettrodi pv Kit 5 electrodes pv Kit 5 electrodes pv Kit 5 elektroden pv Kit 5 electrodos pv	804042
2	Kit 2 diffusori pv Kit 2 diffuseurs Kit 2 diffusers pv Kit 2 diffusoren pv Kit 2 diffusores pv	804044
3	Kit 5 ugelli 20a-50a pv Kit 5 buses 20a-50a pv Kit 5 nozzles 20a-50a pv Kit 5 düsen 20a-50a pv Kit 5 toberas 20a-50a pv	804045
3	Kit 5 ugelli 70a pv Kit 5 buses 70a pv Kit 5 nozzles 70a pv Kit 5 düsen 70a pv Kit 5 toberas 70a pv	804047
3	Kit 5 ugelli scriccatura 45a pv Kit 5 buses decricage 45a pv Kit 5 gouging nozzles 45a pv Kit 5 fugenhobeln düsen 45a pv Kit 5 toberas torchado 45a pv	804062
4	Kit 1 puntale pv Kit 1 embout pv Kit 1 safety cap pv Kit 1 schutzkappe pv Kit 1 puntale pv	804049
5	Kit 2 schermi pv Kit 2 ecrans pv Kit 2 shields pv Kit 2 schutz pv Kit 2 protecciones pv	804050
5	Kit 3 schermi scriccatura 45a pv Kit 3 ecrans decricage 45a pv Kit 3 gouging shields 45a pv Kit 3 fugenhobeln schutz 45a pv Kit 3 protecciones torchado 45a pv	804061
6	Kit 10 o-ring pv Kit 10 o-ring pv Kit 10 o-ring pv Kit 10 o-ring pv Kit 10 o-ring pv	804052
7	Corpo torcia Corps torche Torch body Brennerkörper Cuerpo de antorcha	742746
8	Impugnatura + pulsante Poignee + poussoir Handle + pushbutton Handgriff + druckknopf Empunadura + pulsador	742747

REF.	ELENCO PEZZI RICAMBIO TORCIA LISTE PIECES DETACHEES TORCHE SPARE PARTS LIST TORCH ERSATZTEILLISTE SCLAUCHPAKET PIEZAS DE REPUESTO ANTORCHA	CODICE CODE KODE

REF.	ELENCO PEZZI RICAMBIO TORCIA LISTE PIECES DETACHEES TORCHE SPARE PARTS LIST TORCH ERSATZTEILLISTE SCLAUCHPAKET PIEZAS DE REPUESTO ANTORCHA	CODICE CODE KODE

ELENCO PEZZI DI RICAMBIO
LISTE PIECES DETACHEES
SPARE PARTS LIST
ERSATZTEILLISTE
PIEZAS DE REPUESTO

SUPERIOR PLASMA 100

TELWIN

Esploso macchina, Dessin appareil, Machine drawing, Explosions Zeichnung des Geräts, Diseño seccionado maquina.





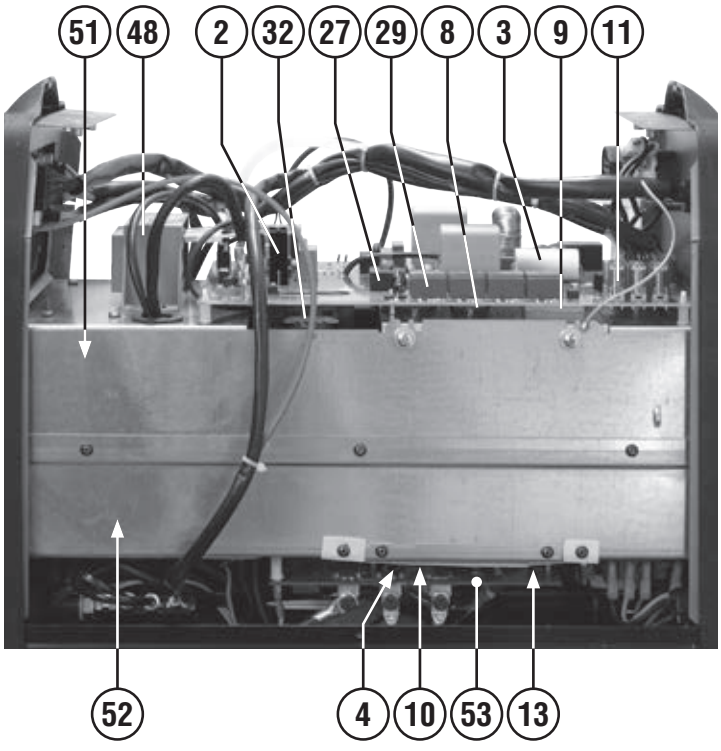

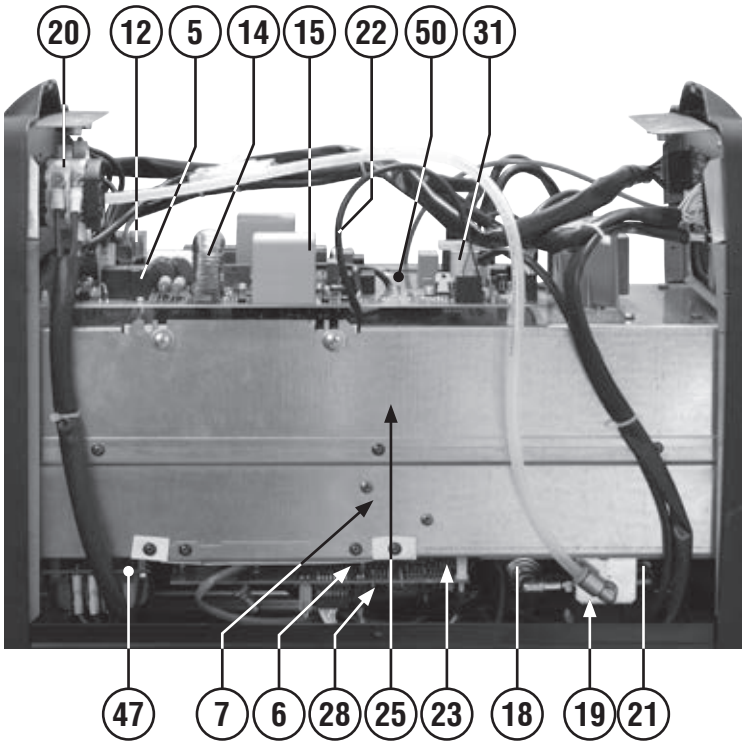

REF.	ELENCO PEZZI DI RICAMBIO PIECES DETACHEES SPARE PARTS LIST ERSATZTEILLISTE PIEZAS DE REPUESTO	CODICE CODE KODE
2	Igbt Igbt Igbt Igbt Igbt	111095
3	Condensatore Condensateur Condenser Kondensator Condensator	111099
4	Igbt Igbt Igbt Igbt Igbt	111193
5	Rele Relais Relais Relais Conectador	111583
6	Sensore hall Capteur hall Sensor hall Messfühler hall Sensor hall	111304
7	Resistenza Resistance Resistance Wiederstand Resistencia	111354
8	Kit igbt Kit igbt Kit igbt Kit igbt Kit igbt	982473
9	Ponte Pont Bridge Brücke Puente	111465
10	Diodo Diode Diode Diode Diodo	112023
11	Rele' Relais Relais Relais Relais	113233
12	Rele' Relais Relais Relais Relais	113281
13	Kit diodi Kit diodes Diodes kit Dioden kit Kit diodos	981883
14	Induttanza Inductance Inductance Drossel Induccion	116747
15	Condensatore Condensateur Condenser Kondensator Condensator	116882
16	Riduttore pressione aria Reducteur de presion air Air pressure regulator Luftdruckminderer Reductor presion aire	120203
17	Cavo 10 mmq 5 m - spina atlas 50 Cable 10 mmq 5 m - fiche atlas 50 Cable 10 mmq 5 m - plug atlas 50 Kabel 10 mmq 5 m - stecker atlas 50 Cable 10 mmq 5 m - enchufe atlas 50	120315
18	Pressostato Pressostat Pressure switch Druckanzeige Presostato	121750
19	Elettrovalvola 2vie 1/8 230v Electrovanne 2 voies 1/8 230v 2-Way electro-valve 1/8 230v 2-Wege-elektroventil 1/8 230v Electroválvula de 2 vías 1/8 230v	121803
20	Commutatore Commutateur Switch Schalter Conmutador	122017
21	Elettrovalvola Electrovanne Electrovalve Elektroventil Electrovalvula	121800
22	Cablaggio ntc Cablage ntc Wire set ntc Kabelsatz ntc Cables ntc	124228
23	Termostato Thermostat Thermostat Thermostat Termostato	124846
24	Cablaggio comando a distanza Cable pour commande a distance Cable for remote control Fernreglerkabel Cable para mando a distancia	124853
25	Cablaggio ventilatore Cable de ventilateur Fan cable Ventilatorskabel Cable de vendilador	125034
26	Cavo alim. 4g2.5 2.5 M Cable alim. 4g2.5 2.5 M Mains cable 4g2.5 2.5 M Netzkabel 4g2.5 2.5 M Cable alim. 4g2.5 2.5 M	132430
27	Trasformatore di corrente Transformateur de courant Current transformer Stromwandler Transformador de corriente	152230
28	Trasformatore impulsi Transformateur d'impulsions Impulse transformer Impuls-transformator Transformador de impulsos	152261
29	Trasformatore impulsi Transformateur d'impulsions Impulse transformer Impuls-transformator Transformador de impulsos	152291
30	Ventilatore Ventilateur Fan Ventilator Ventilador	152297
31	Trasformatore Transformateur complet Transformateur complet Trafo Transformateur complet	169627
32	Induttanza primario Inductance primaire Primary inductance Primaer drossel Induccion primario	169642
33	Pannello Panneau Panel Tafel Panel	314651
34	Frontale Partie frontal Front panel Geraetefront Frontal	322881
35	Retro Partie arriere Back panel Rueckseite Trasera	322882
36	Manico Poignee Handle Handgriff Manija	322883
37	Piedino Embout Foot Fuss Pie	323001
38	Assieme manopola per commutatore Set poigne pour commutateur Switch knob set Umschaltergriff set Set manjia para conmutador	323101
39	Retro Partie arriere Back panel Rückseite Trasera	642578
40	Frontale Partie frontal Front panel Gerätefront Frontal	642579
41	Mantello Capot Cover Deckel Panel de cobertura	656210
42	Presa atlas 50mmq Prise atlas 50mmq Atlas socket 50mmq Atlas steckdose 50mmq Enchufe atlas 50mmq	712036
43	Toledo 300 pinza di massa 300a Toledo 300 borne de masse 300a Toledo 300 work clamp 300a Toledo 300 masseklemme 300a Toledo 300 borne de masa 300a	712231
44	Attacco torcia Attelage torche Torch connection Brenneranschluss Enganche soplete	742642
45	Kit manopola encoder Kit poignee encoder Encoder knob kit Encodergriff kit Kit manija encoder	980520
46	Kit fondo Kit chassis Bottom kit Bodenteil kit Kit fondo	980817
47	Kit scheda filtro Kit platine filtre Filter card kit Filterkartekit Kit tarjeta filtro	982009
48	Autotrasformatore Autotransformateur Autotransformer Autotransformator Autotransformador	169116
49	Kit ass. Pannello + scheda Kit panneau + fiche Panel + card kit Tafel + karte kit Panel + tarjeta kit	981872
50	Kit scheda primario Kit fiche primaire Primary pcb kit Primärtrafokarte kit Kit tarjeta primario	981873
51	Kit scheda induttanza Kit fiche inductance Inductance card kit Drosselskarte kit Kit tarjeta induccion	981874
52	Kit scheda trasformatore Kit fiche transformateur Transformer board kit Trafo karte kit Kit tarjeta transformador	981875
53	Kit scheda secondario Kit fiche secondaire Secondary pcb kit Sekundärtrafokarte kit Kit tarjeta secundario	981876
54	Kit pressacavo + ghiera Kit presse cable + embout Kit cable bushing + ring nut Kit kabelhalter + nutmutter Kit prensa cable + virola	990046

Schema elettrico, Schéma électrique, Diagram, Schaltplan, Esquema de conexiones.

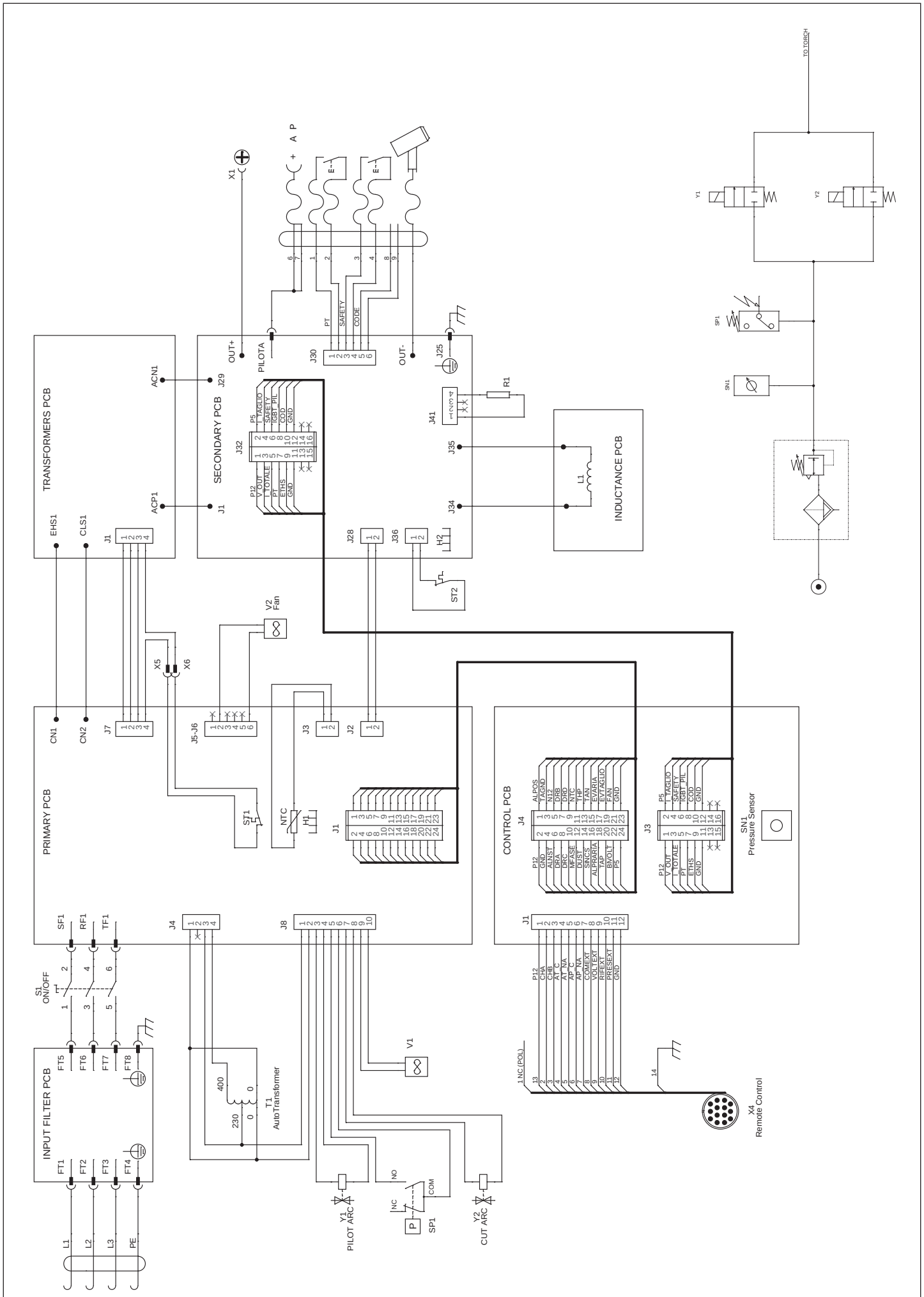

Esploso torcia, Dessin torche, Torch drawing, Schlauchpaket - Explosionszeichnung, Diseño seccionado antorcha.

742840

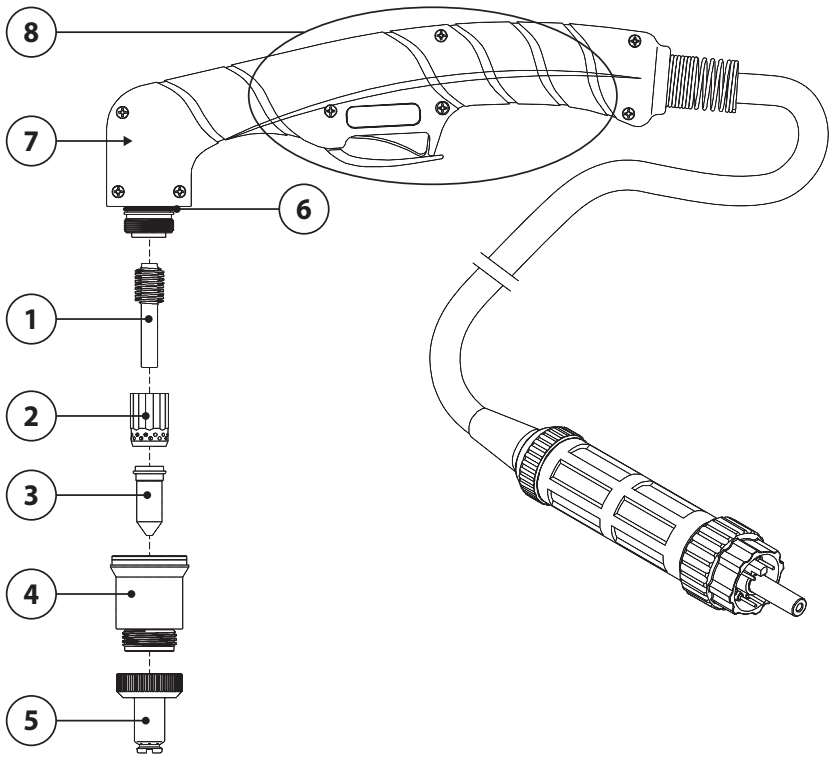

REF.	ELENCO PEZZI RICAMBIO TORCIA LISTE PIECES DETACHEES TORCHE SPARE PARTS LIST TORCH ERSATZTEILLISTE SCLAUCHPAKET PIEZAS DE REPUESTO ANTORCHA	CODICE CODE KODE
1	Elettrodi pv 5 pz Electrodes pv 5 pcs Electrodes pv 5 pcs Elektroden pv 5 stk Electrodos pv 5 pz	804042
2	Diffusori 20a-70a pv 2 pz Diffuseurs 20a-70a pv 2 pcs Diffusers 20a-70a pv 2 pcs Diffusoren 20a-70a pv 2 stk Difusores 20a-70a pv 2 pz	804044
2	Diffusori 85a-105a pv 2 pz Diffuseurs 85a-105a pv 2 pcs Diffusers 85a-105a pv 2 pcs Diffusoren 85a-105a pv 2 stk Difusores 85a-105a pv 2 pz	804344
3	Ugelli 20a-50a pv 5 pz Buses 20a-50a pv 5 pcs Nozzles 20a-50a pv 5 pcs Düsen 20a-50a pv 5 stk Toberas 20a-50a pv 5 pz	804045
3	Ugelli 70a pv 5 pz Buses 70a pv 5 pcs Nozzles 70a pv 5 pcs Düsen 70a pv 5 stk Toberas 70a pv 5 pz	804047
3	Ugelli 85a pv 105 5 pz Buses 85a pv 105 5 pcs Nozzles 85a pv 105 5 pcs Düsen 85a pv 105 5 stk Toberas 85a pv 105 5 pz	804345
3	Ugelli 105a pv 105 5 pz Buses 105a pv 105 5 pcs Nozzles 105a pv 105 5 pcs Düsen 105a pv 105 5 stk Toberas 105a pv 105 5 pz	804346
3	Ugelli scriccatura 105a pv 105 5 pz Buses decricage 105a pv 105 5 pcs Gouging nozzles 105a pv 105 5 pcs Fugenhobeln düsen 105a pv 105 5 stk Inyectores torchado 105a pv 105 5 pz	804347
4	Puntale 20a-70a pv Embout 20a-70a pv Safety cap 20a-70a pv Schutzkappe 20a-70a pv Puntale 20a-70a pv	804049
4	Puntale 85a-105a pv 105 Embout 85a-105a pv 105 Safety cap 85a-105a pv 105 Schutzkappe 85a-105a pv 105 Puntale 85a-105a pv 105	804348
5	Schermi 20a-70a pv 2 pz Ecrans 20a-70a pv 2 pcs Shields 20a-70a pv 2 pcs Schutz 20a-70a pv 2 stk Protecciones 20a-70a pv 2 pz	804050
5	Kit 3 schermi scriccatura 45a pv Kit 3 ecrans decricage 45a pv Kit 3 gouging shields 45a pv Kit 3 fugenhobeln schutz 45a pv Kit 3 protecciones torchado 45a pv	804061

REF.	ELENCO PEZZI RICAMBIO TORCIA LISTE PIECES DETACHEES TORCHE SPARE PARTS LIST TORCH ERSATZTEILLISTE SCLAUCHPAKET PIEZAS DE REPUESTO ANTORCHA	CODICE CODE KODE
5	Schermi 85a-105a pv 105 2 pz Boucliers 85a-105a pv 105 2 pcs Shields 85a-105a pv 105 2 pcs Schutz 85a-105a pv 105 2 stk Protecciones 85a-105a pv 105 2 pz	804349
6	O-ring pv 10 pz O-ring pv 10 pcs O-ring pv 10 pcs O-ring pv 10 stk O-ring pv 10 pz	804052
7	Corpo torcia Corps torche Torch body Brennerkörper Cuerpo de antorcha	742746
8	Impugnatura + pulsante Poignee + poussoir Handle + pushbutton Handgriff + druckknopf Empunadura + pulsador	742747
9	Starter kit 85a pv 105 Kit consommables 85a pv 105 Starter kit 85a pv 105 Starter kit 85a pv 105 Kit de inicio 85a pv 105	804352
9	Starter kit 105a pv 105 Kit consommables 105a pv 105 Starter kit 105a pv 105 Starter kit 105a pv 105 Kit de inicio 105a pv 105	804353

REF.	ELENCO PEZZI RICAMBIO TORCIA LISTE PIECES DETACHEES TORCHE SPARE PARTS LIST TORCH ERSATZTEILLISTE SCLAUCHPAKET PIEZAS DE REPUESTO ANTORCHA	CODICE CODE KODE

ELENCO PEZZI DI RICAMBIO
LISTE PIECES DETACHEES
SPARE PARTS LIST
ERSATZTEILLISTE
PIEZAS DE REPUESTO

SUPERIOR PLASMA 160

TELWIN

Esploso macchina, Dessin appareil, Machine drawing, Explosions Zeichnung des Geräts, Diseño seccionado maquina.

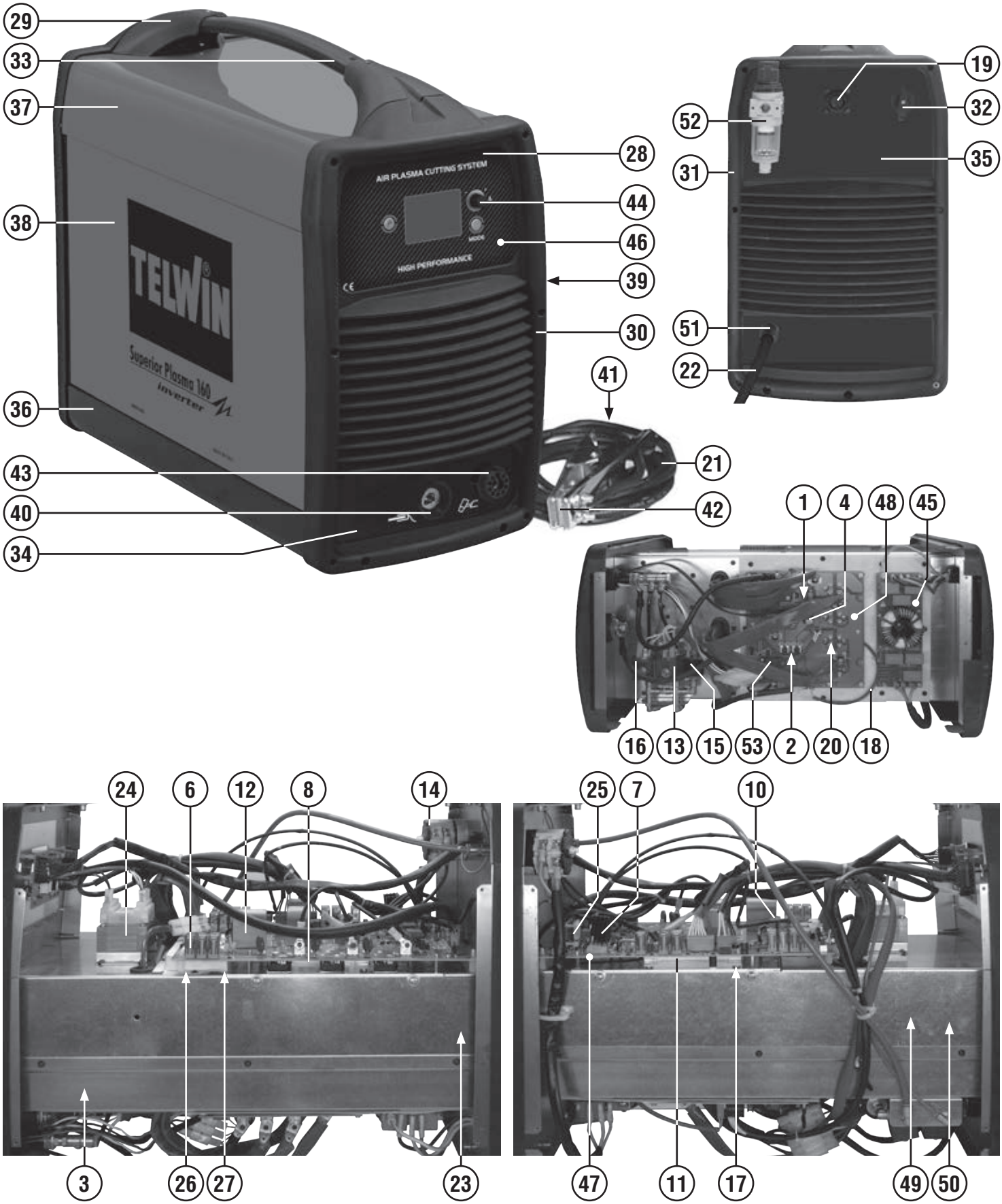

REF.	ELENCO PEZZI DI RICAMBIO PIECES DETACHEES SPARE PARTS LIST ERSATZTEILLISTE PIEZAS DE REPUESTO	CODICE CODE KODE
1	Igbt Igbt Igbt Igbt Igbt	111193
2	Sensore hall Capteur hall Sensor hall Messfühler hall Sensor hall	111304
3	Resistenza Resistance Resistance Wiederstand Resistencia	111354
4	Diodo Diode Diode Diode Diodo	112023
6	Rele' Relais Relais Relais Relais	113281
7	Igbt Igbt Igbt Igbt Igbt	111094
8	Raddrizzatore Redresseur Rectifier Gleichrichter Rectificador	116066
10	Sensore hall Capteur hall Sensor hall Messfuhler hall Sensor hall	116836
11	Kit igbt + diodi Kit igbt + diodes Kit igbt + diodes Kit igbt + dioden Kit igbt + diodos	982210
12	Condensatore Condensateur Condenser Kondensator Condensator	116882
13	Elettrovalvola 2vie 1/8 230v Electrovanne 2 voies 1/8 230v 2-Way electro-valve 1/8 230v 2-Wege-elektroventil 1/8 230v Electroválvula de 2 vías 1/8 230v	121803
14	Commutatore Commutateur Switch Schalter Conmutador	121505
15	Pressostato Pressostat Pressure switch Druckanzeige Presostato	121750
16	Elettrovalvola Electrovanne Electrovalve Elektroventil Electrovalvula	121800
17	Cablaggio ntc Cablage ntc Wire set ntc Kabelsatz ntc Cables ntc	124228
18	Termostato Thermostat Thermostat Thermostat Termostato	124846
19	Cablaggio comando a distanza Cable pour commande a distance Cable for remote control Fernreglerkabel Cable para mando a distancia	124853
20	Kit diodo Kit diode Kit diode Kit diode Kit diodo	990726
21	Cavo 0,5 m - spina atlas Cable 0,5 m - fiche atlas Cable 0,5 m - plug atlas Kabel 0,5 m - stecker atlas Cable 0,5 m - enchufe atlas	124863
22	Cavo alim. 4g06.00 L=03.00 Cable alim. 4g06.00 L=03.00 Mains cable 4g06.00 L=03.00 Netzkabel 4g06.00 L=03.00 Cable alim. 4g06.00 L=03.00	132361
23	Ventilatore Ventilateur Fan Ventilator Ventilador	152297
24	Trasformatore ausiliario Transformateur auxiliaire Auxiliary transformer Hilfstransformator Transformador auxiliar	990598
25	Trasformatore Transformateur complet Transformateur complet Trafo Transformateur complet	169627
26	Induttanza primario Inductance primaire Primary inductance Primaer drossel Induccion primario	169881
27	Induttanza Inductance Inductance Drossel Induccion	169786
28	Pannello Panneau Panel Tafel Panel	315058
29	Copertura manico Capot poignee Handlecover Handgriffsdeckel Copertura manija	322848
30	Frontale Partie frontal Front panel Geraetefront Frontal	322872
31	Retro Partie arriere Back panel Rueckseite Trasera	322873
32	Assieme manopola per commutatore Set poigne pour commutateur Switch knob set Umschaltergriff set Set manjia para conmutador	323101
33	Manico Poignee Handle Handgriff Manija	641005
34	Frontale Partie frontal Front panel Geraetefront Frontal	642472
35	Retro Partie arriere Back panel Rueckseite Trasera	642473
36	Fondo Chassis Bottom Bodenteil Fondo	645447
37	Mantello Capot Cover Deckel Panel de cobertura	651149
38	Fianco destro Partie laterale droit Side panel right Seitenblech recht Panel derecho	656178
39	Fianco sx Partie lateral Side panel Linkes seitenteil Panel izquierdo	656179
40	Presa atlas 50mmq Prise atlas 50mmq Atlas socket 50mmq Atlas steckdose 50mmq Enchufe atlas 50mmq	712036
41	Spina atlas 50mmq Fiche atlas 50mmq Atlas plug 50mmq Atlas stecker 50mmq Enchufe atlas 50mmq	712040
42	Toledo 300 pinza di massa 300a Toledo 300 borne de masse 300a Toledo 300 work clamp 300a Toledo 300 masseklemme 300a Toledo 300 borne de masa 300a	712231
43	Attacco torcia Attelage torche Torch connection Brenneranschluss Enganche soplete	742642
44	Kit manopola encoder Kit poignee encoder Encoder knob kit Encodergriff kit Kit manija encoder	980520
45	Kit scheda filtro ingresso Kit platine filtre input Input filter card kit Input filterkarte kit Kit tarjeta filtro input	980947
46	Kit ass. Pannello + scheda Kit panneau + fiche Panel + card kit Tafel + karte kit Panel + tarjeta kit	981712
47	Kit scheda primario Kit fiche primaire Primary pcb kit Primaertrafokarte kit Kit tarjeta primario	981713
48	Kit scheda secondario Kit fiche secondaire Secondary pcb kit Sekundaertrafokarte kit Kit tarjeta secundario	981714
49	Kit trasformatore potenza Kit transformateur puissance Power transformer kit Leistungstransformatorkit Kit transformador de potencia	981715
50	Kit induttanza uscita Kit inductance sortie Output inductance kit Ausgang drossel kit Kit induccion salida	981716
51	Kit pressacavo + ghiera Kit presse cable + embout Kit cable bushing + ring nut Kit kabelhalter + nutmutter Kit prensa cable + virola	990046
52	Riduttore pressione aria Reducteur de presion air Air pressure regulator Luftdruckminderer Reductor presion aire	120203
53	Trasformatore impulsi Transformateur d'impulsions Impulse transformer Impuls-transformator Transformador de impulsos	152261

Schema elettrico, Schéma électrique, Diagram, Schaltplan, Esquema de conexiones.

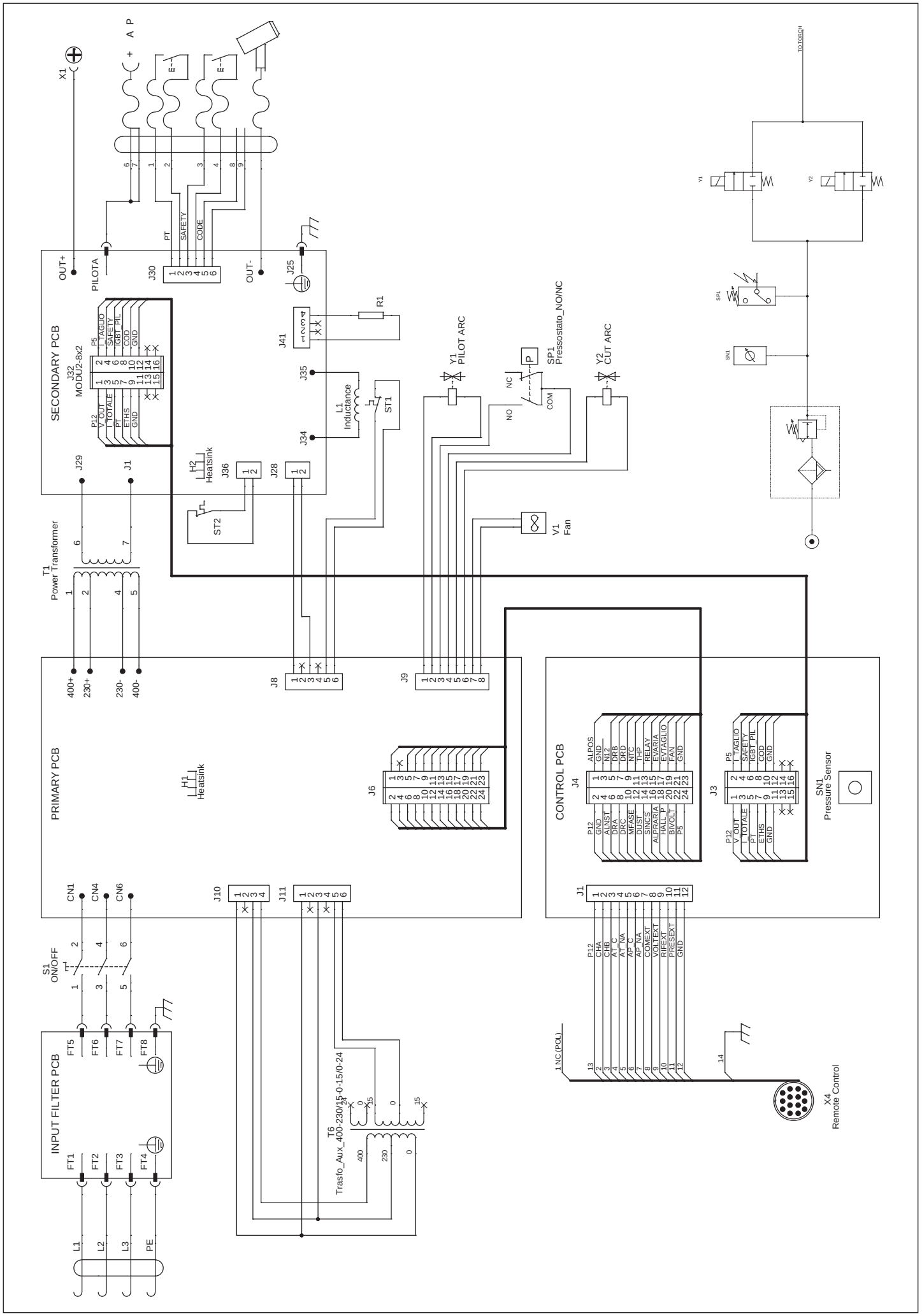

Esploso torcia, Dessin torche, Torch drawing, Schlauchpaket - Explosionszeichnung, Diseño seccionado antorcha.

742653

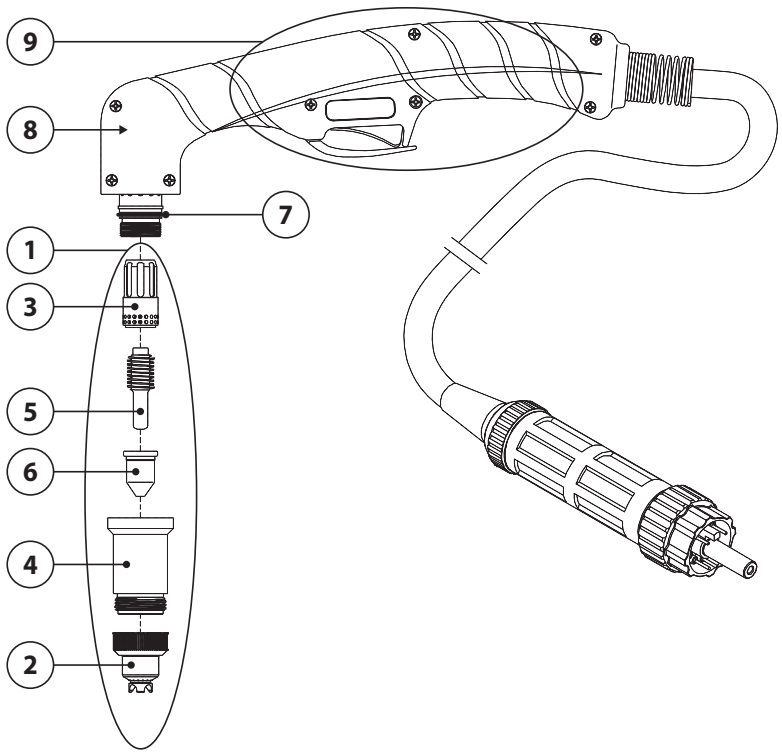

REF.	ELENCO PEZZI RICAMBIO TORCIA LISTE PIECES DETACHEES TORCHE SPARE PARTS LIST TORCH ERSATZTEILLISTE SCLAUCHPAKET PIEZAS DE REPUESTO ANTORCHA	CODICE CODE KODE
1	Starter kit 125a px Kit consommables 125a px Starter kit 125a px Starter kit 125a px Kit de inicio 125a px	802966
1	Starter kit 105a px Kit consommables 105a px Starter kit 105a px Starter kit 105a px Kit de inicio 105a px	802961
1	Starter kit 85a px Kit consommables 85a px Starter kit 85a px Starter kit 85a px Kit de inicio 85a px	802960
1	Starter kit 45a px Kit consommables 45a px Starter kit 45a px Starter kit 45a px Kit de inicio 45a px	802958
1	Starter kit 65a px Kit consommables 65a px Starter kit 65a px Starter kit 65a px Kit de inicio 65a px	802959
2	Kit 3 schermi scriccatura 125a px Kit 3 boucliers decricage 125a px Kit 3 gouging shields 125a px Kit 3 fugenhobeln schutz 125a px Kit 3 protecciones torchado 125a px	804016
2	Kit 2 schermi 100a-150a px Kit 2 boucliers 100a-150a px Kit 2 shields 100a-150a px Kit 2 schutz 100a-150a px Kit 2 protecciones 100a-150a px	802964
2	Kit 2 schermi 45a-85a px Kit 2 boucliers 45a-85a px Kit 2 shields 45a-85a px Kit 2 schutz 45a-85a px Kit 2 protecciones 45a-85a px	802963
3	Kit 2 diffusori 45a-85a px-pxa Kit 2 diffuseurs 45a-85a px-pxa Kit 2 diffusers 45a-85a px-pxa Kit 2 diffusoren 45a-85a px-pxa Kit 2 diffusores 45a-85a px-pxa	802888
3	Kit 2 diffusori 100a-150a px-pxa Kit 2 diffuseurs 100a-150a px-pxa Kit 2 diffusers 100a-150a px-pxa Kit 2 diffusoren 100a-150a px-pxa Kit 2 diffusores 100a-150a px-pxa	802891
4	Kit 1 puntale 45a-85a px-pxa Kit 1 embout 45a-85a px-pxa Kit 1 safety cap 45a-85a px-pxa Kit 1 schutzkappe 45a-85a px-pxa Kit 1 puntale 45a-85a px-pxa	802887
4	Kit 1 puntale 100a-150a px-pxa Kit 1 embout 100a-150a px-pxa Kit 1 safety cap 100a-150a px-pxa Kit 1 schutzkappe 100a-150a px-pxa Kit 1 puntale 100a-150a px-pxa	802890

REF.	ELENCO PEZZI RICAMBIO TORCIA LISTE PIECES DETACHEES TORCHE SPARE PARTS LIST TORCH ERSATZTEILLISTE SCLAUCHPAKET PIEZAS DE REPUESTO ANTORCHA	CODICE CODE KODE
5	Kit 5 elettrodi 45a-150a px-pxa Kit 5 electrodes 45a-150a px-pxa Kit 5 electrodes 45a-150a px-pxa Kit 5 elektroden 45a-150a px-pxa Kit 5 electrodos 45a-150a px-pxa	802889
6	Kit 5 ugelli scriccatura 125a px Kit 5 buses decricage 125a px Kit 5 gouging nozzles 125a px Kit 5 fugenhobeln düsen 125a px Kit 5 toberas torquado 125a px	804017
6	Kit 5 ugelli 125a px-pxa Kit 5 buses 125a px-pxa Kit 5 nozzles 125a px-pxa Kit 5 düsen 125a px-pxa Kit 5 toberas 125a px-pxa	802896
6	Kit 5 ugelli 105a px-pxa Kit 5 buses 105a px-pxa Kit 5 nozzles 105a px-pxa Kit 5 düsen 105a px-pxa Kit 5 toberas 105a px-pxa	802895
6	Kit 5 ugelli 85a px-pxa Kit 5 buses 85a px-pxa Kit 5 nozzles 85a px-pxa Kit 5 düsen 85a px-pxa Kit 5 toberas 85a px-pxa	802894
6	Kit 5 ugelli 65a px-pxa Kit 5 buses 65a px-pxa Kit 5 nozzles 65a px-pxa Kit 5 düsen 65a px-pxa Kit 5 toberas 65a px-pxa	802893
6	Kit 5 ugelli 45a px-pxa Kit 5 buses 45a px-pxa Kit 5 nozzles 45a px-pxa Kit 5 düsen 45a px-pxa Kit 5 toberas 45a px-pxa	802892
7	Kit 10 o-ring px-pxa Kit 10 o-ring px-pxa Kit 10 o-ring x-pxa Kit 10 o-ring px-pxa Kit 10 o-ring px-pxa	804053
8	Corpo torcia Corps torche Torch body Schlauchpaketteil Cuerpo de antorcha	742748
9	Impugnatura + pulsante Poignee + poussoir Handle + pushbutton Handgriff + druckknopf Empunadura + pulsador	742749

REF.	ELENCO PEZZI RICAMBIO TORCIA LISTE PIECES DETACHEES TORCHE SPARE PARTS LIST TORCH ERSATZTEILLISTE SCLAUCHPAKET PIEZAS DE REPUESTO ANTORCHA	CODICE CODE KODE

ELENCO PEZZI DI RICAMBIO
LISTE PIECES DETACHEES
SPARE PARTS LIST
ERSATZTEILLISTE
PIEZAS DE REPUESTO

SMART INDUCTOR 5000 TWISTER

Esploso macchina, Dessin appareil, Machine drawing, Explosions Zeichnung des Geräts, Diseño seccionado maquina.

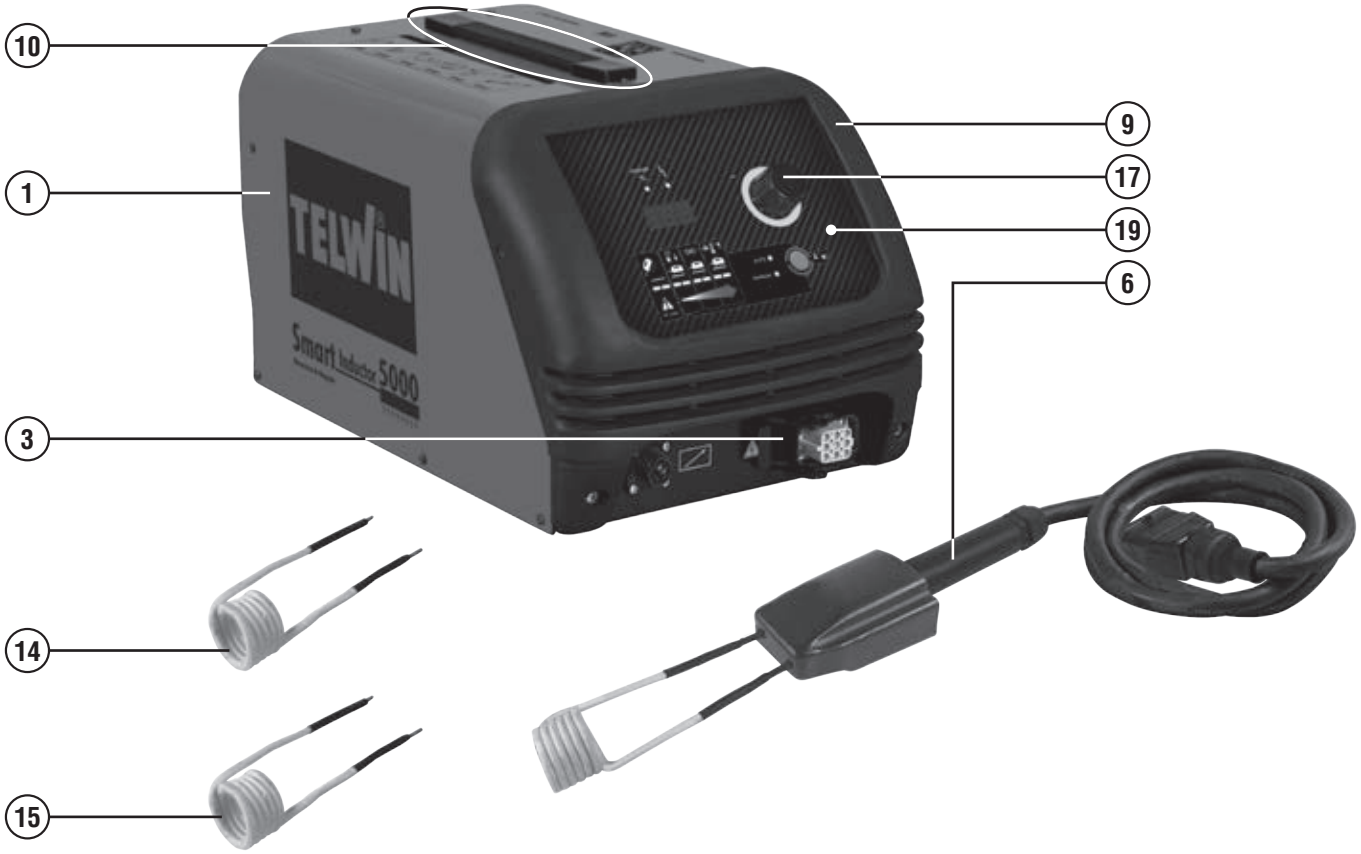

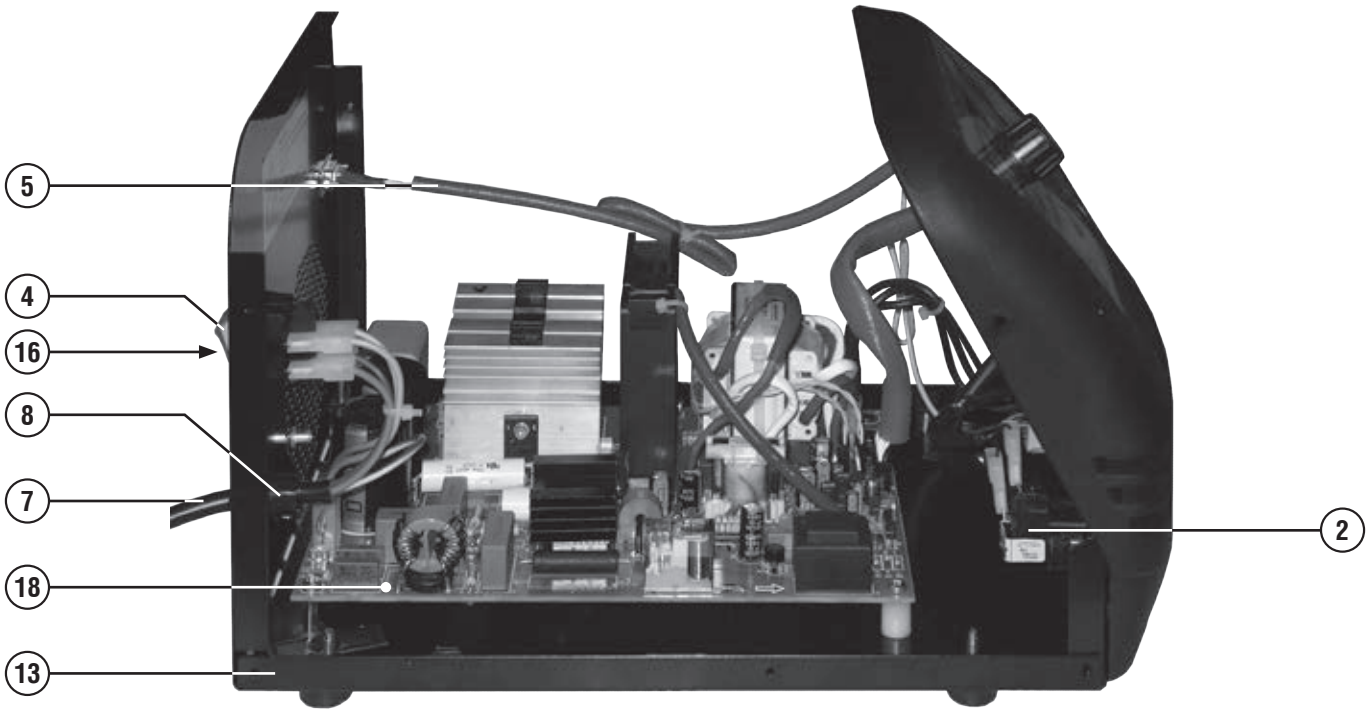

REF.	ELENCO PEZZI DI RICAMBIO PIECES DETACHEES SPARE PARTS LIST ERSATZTEILLISTE PIEZAS DE REPUESTO	CODICE CODE KODE
1	Kit mantello Kit capot Cover kit Deckelkit Kit panel de cobertura	981128
2	Interruttore Interrupteur Switch Schalter Interruptor	121540
3	Custodia Garde Guard Schutz Proteccion	121548
4	Interruttore Interrupteur Switch Schalter Interruptor	122381
5	Cablaggio programmazione Cable de programmation Programmes cable Programmenkabel Cable de programacion	124086
6	Heat twister Heat twister Heat twister Heat twister Heat twister	801412
7	Cavo alim. 3g1.5 2 M spina schuko Cable alim. 3g1.5 2 M fiche schuko Mains cable 3g1.5 2 M schuko plug Netzkabel 3g1.5 2 M schuko stecker Cable alim. 3g1.5 2 M espina schuko	132155
8	Pressacavo Presse cable Cable bushing Kabelhalter Prensa cable	322112
9	Frontale Partie frontal Front panel Gerätefront Frontal	322472
10	Kit maniglia Kit poignee Kit handle Kit handgriff Kit manija	990398
13	Kit fondo Kit chassis Bottom kit Bodenteil kit Kit fondo	981628
14	Kit 2 twister 10v m8/m10 Kit 2 twister 10v m8/m10 Kit 2 twister 10v m8/m10 Kit 2 twister 10v m8/m10 Kit 2 twister 10v m8/m10	801413
15	Kit 2 twister 14v m12/m14 Kit 2 twister 14v m12/m14 Kit 2 twister 14v m12/m14 Kit 2 twister 14v m12/m14 Kit 2 twister 14v m12/m14	801414
16	Copri interruttore Couvre interrupteur Switch cover Schalterdeckel Cubre interruptor	122353
17	Kit manopola nera Kit poignee noir Black knob kit Schwarze griff kit Kit manija negra	980772
18	Kit scheda potenza Kit platine puissance Power board kit Leistungskartekit Kit tarjeta de potencia	981126
19	Kit ass. Pannello + scheda Kit panneau + fiche Panel + card kit Tafel + karte kit Panel + tarjeta kit	981127

Schema elettrico, Schéma électrique, Diagram, Schaltplan, Esquema de conexiones.

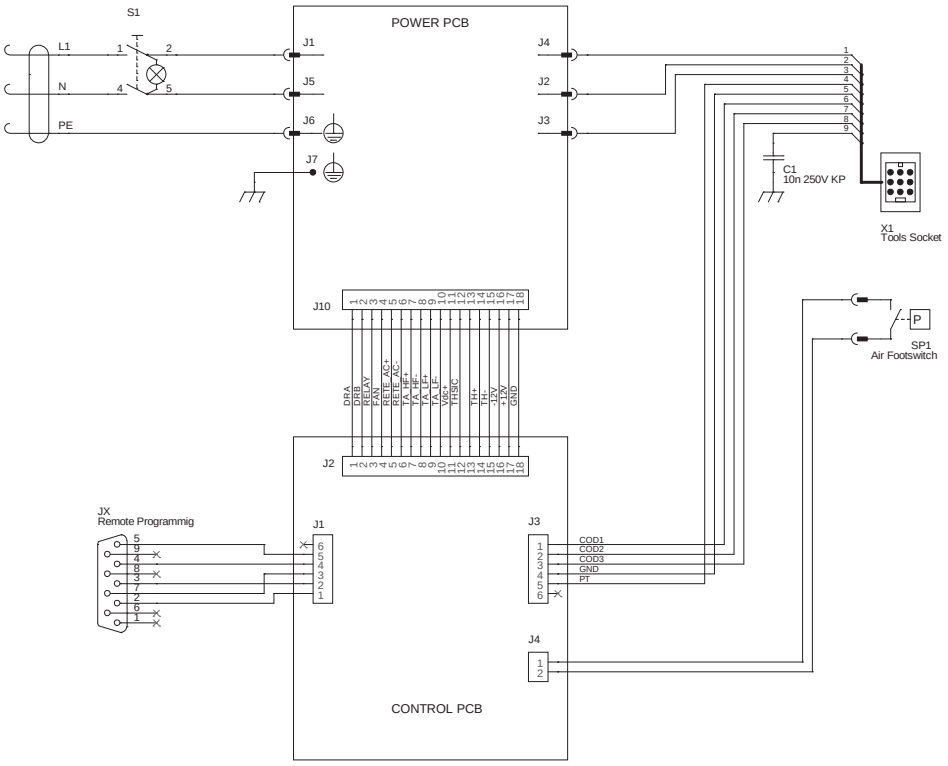

ELENCO PEZZI DI RICAMBIO
LISTE PIECES DETACHEES
SPARE PARTS LIST
ERSATZTEILLISTE
PIEZAS DE REPUESTO

D-ARC 200

Esploso macchina, Dessin appareil, Machine drawing, Explosions Zeichnung des Geräts, Diseño seccionado maquina.

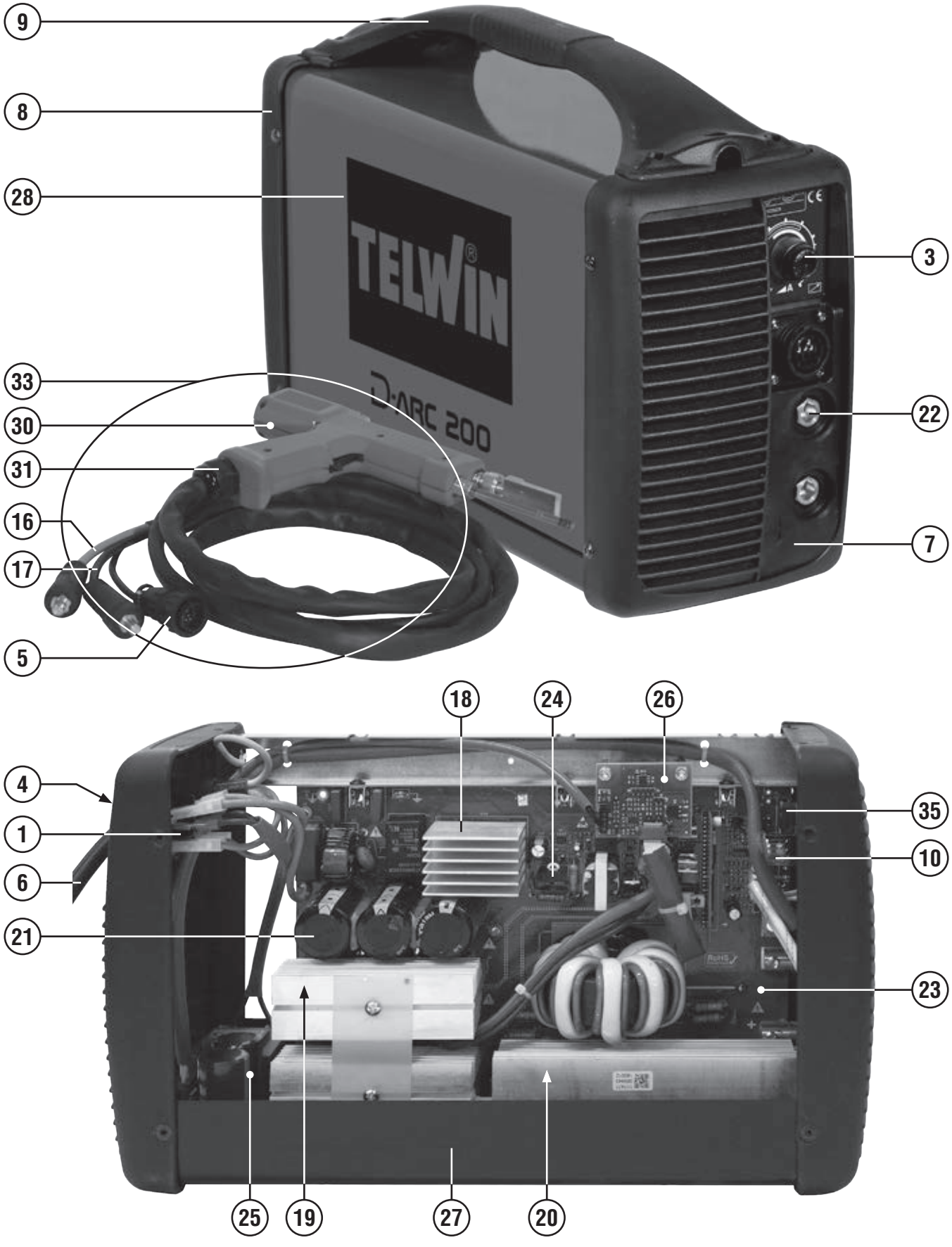

REF.	ELENCO PEZZI DI RICAMBIO PIECES DETACHEES SPARE PARTS LIST ERSATZTEILLISTE PIEZAS DE REPUESTO	CODICE CODE KODE
1	Interruttore Interrupteur Switch Schalter Interruptor	121248
2	Microinterruttore Microinterrupteur Microswitch Microschalter Microinterruptor	121329
3	Manopola Poigne Knob Griff Manjia	121394
4	Copri interruttore Couvre interrupteur Switch cover Schalterdeckel Cubre interruptor	122353
5	Cablaggio pistola Cable pistolet Gun cable Kabel für pistole Cable pistola	125204
6	Cavo alimentazione Cable de reseau Mains cable Netzkabel Cable de alimentation	132157
7	Frontale Partie frontal Front panel Gerätefront Frontal	321355
8	Retro Partie arriere Back panel Rueckseite Trasera	322694
9	Manico Poignee Handle Handgriff Manija	322695
10	Guida luce Guide Guide Führung Guia	322898
11	Portaelettrodo Porte electrode Electrode holder Elektrodenhalter Portaelectrodo	433189
12	Mandrino Mandrin Mandrel Dorn Mandril	433190

REF.	ELENCO PEZZI DI RICAMBIO PIECES DETACHEES SPARE PARTS LIST ERSATZTEILLISTE PIEZAS DE REPUESTO	CODICE CODE KODE
13	Ghiera per eletrodo Collier de serrage electrode Electrode lockring Nutmutter für elektrode Anillo de bloqueo electrodo	433191
14	Ghiera per mandrino Embout pour mandrin Nut for mandrel Nutmutter für dorn Anillo para mandril	433193
15	Elettrodo Electrode Electrode Elektrode Eletrodo	690213
16	Cavo tw05v-f 1x010 l=03,00m-ax25+occh. Cable tw05v-f 1x010 l=03,00m-ax25+oeil. Cable tw05v-f 1x010 l=03,00m ax25+eyel. Kabel tw05v-f 1x010 l=03,00m-ax25q+öse Cable tw05v-f 1x010 l=03,00m-ax25+ojete	713309
17	Cavo tw05v-f 1x010 l=03.00m-ax25+occh. Cable tw05v-f 1x010 l=03.00m-ax25+oeil. Cable tw05v-f 1x010 l=03.00m-ax25+eyel. Kabel tw05v-f 1x010 l=03.00m-ax25+öse Cable tw05v-f 1x010 l=03.00m-ax25+ojete	713310
18	Kit ponte monofase Kit pont monophase Single phase bridge kit Einfasige brücke kit Kit puente monofasico	981581
19	Kit igbt + diodi Kit igbt + diodes Kit igbt + diodes Kit igbt + dioden Kit igbt + diodos	981582
20	Kit diodi Kit diodes Diode kit Diode kit Kit diodo	981583
21	Kit condensatore snap-in Kit condensateur snap-in Condenser kit snap-in Kondensator kit snap-in Kit condensator snap-in	981584
22	Kit prese atlas 25mmq Kit prises atlas25mmq Atlas sockets kit 25mmq Atlas steckdose kit 25mmq Kit enchufes atlas 25mmq	981587
23	Kit scheda potenza Kit carte puissance Power board kit Leistungskartekit Kit tarjeta potencia	982124
24	Kit mosfet flyback Kit mosfet flyback Mosfet flyback kit Mosfet flyback kit Kit mosfet flyback	982126

REF.	ELENCO PEZZI DI RICAMBIO PIECES DETACHEES SPARE PARTS LIST ERSATZTEILLISTE PIEZAS DE REPUESTO	CODICE CODE KODE
25	Kit scheda ausiliario Kit platine auxiliare Auxiliary board kit Hilfskartekit Kit tarjeta ausiliaria	982175
26	Kit scheda plug-in Kit module plug-in Pcb kit plug-in Steuerungskit plug-in Kit tarjeta plug-in	982176
27	Kit fondo Kit chassis Bottom kit Bodenteil kit Kit fondo	982177
28	Kit mantello Kit capot Cover kit Deckel kit Kit panel de cobertura	982178
29	Kit portarondella Kit support rondelle Washer holder kit Scheibehalterung kit Kit sosten arandela	982179
30	Kit impugnatura Kit poignee Handle kit Handgriff kit Kit empunadura	982180
31	Kit pressacavo + ghiera Kit presse cable + embout Kit cable bushing + ring nut Kit kabelhalter + nutmutter Kit prensa cable + virola	982181
32	Kit elettromagnete Kit electroaimant Electromagnet kit Elektromagnet kit Kit electroimán	982182
33	Pistola d-arc Pistolet d-arc D-arc gun D-arc pistole Pistola d-arc	804132
34	Portaelettrodo Porte electrode Electrode holder Elektrodenhalter Portaelectrodo	433275
35	Pot. Carb. 1k lin. 0.20w 10% Pot. Carb. 1k lin. 0.20w 10% Pot. Carb. 1k lin. 0.20w 10% Pot. Carb. 1k lin. 0.20w 10% Pot. Carb. 1k lin. 0.20w 10%	111487

Esploso macchina, Dessin appareil, Machine drawing, Explosions Zeichnung des Geräts, Diseño seccionado maquina.

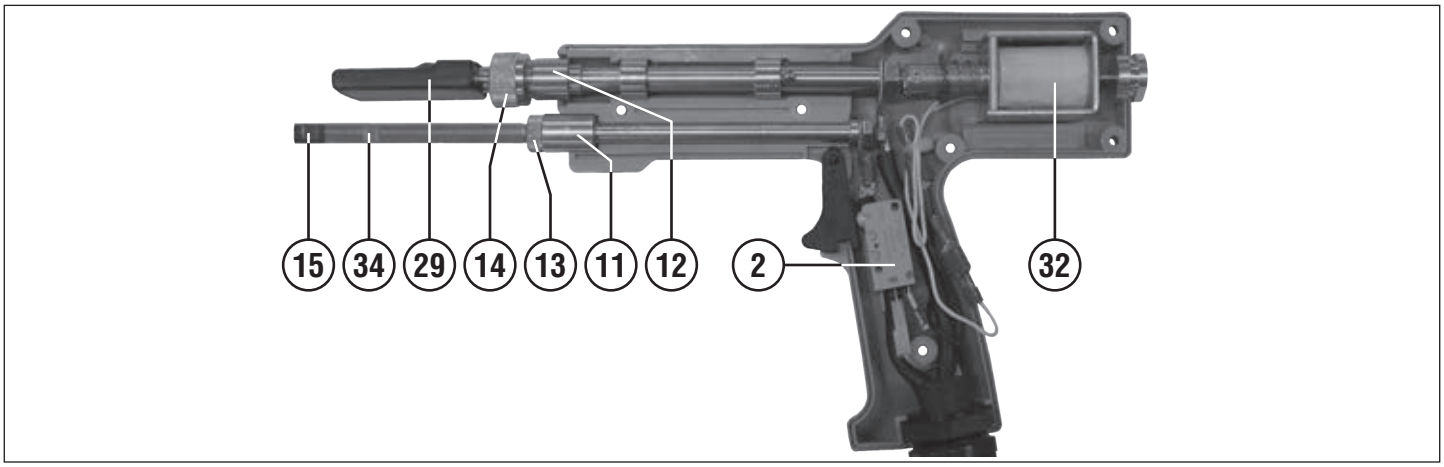

Schema elettrico, Schéma électrique, Diagram, Schaltplan, Esquema de conexiones.

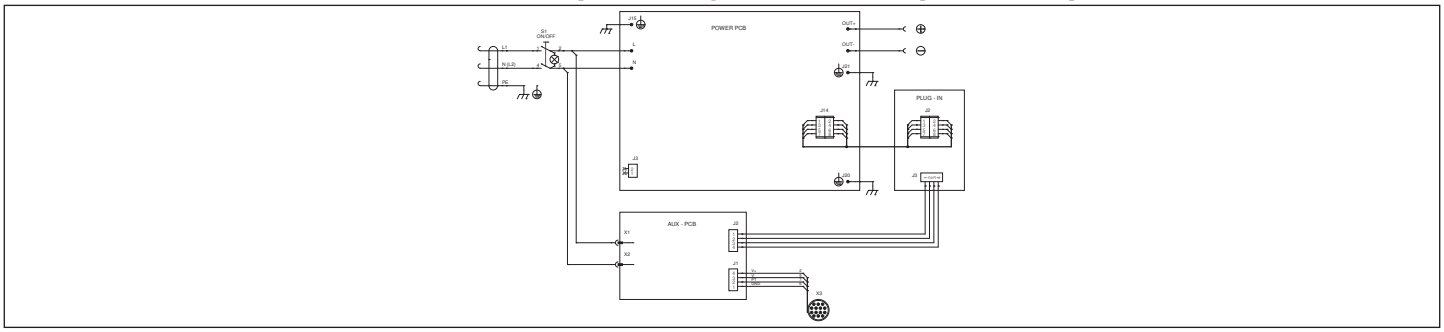

ELENCO PEZZI DI RICAMBIO
LISTE PIECES DETACHEES
SPARE PARTS LIST
ERSATZTEILLISTE
PIEZAS DE REPUESTO

ALUSPOTTER 6100

Esploso macchina, Dessin appareil, Machine drawing, Explosions Zeichnung des Geräts, Diseño seccionado maquina.

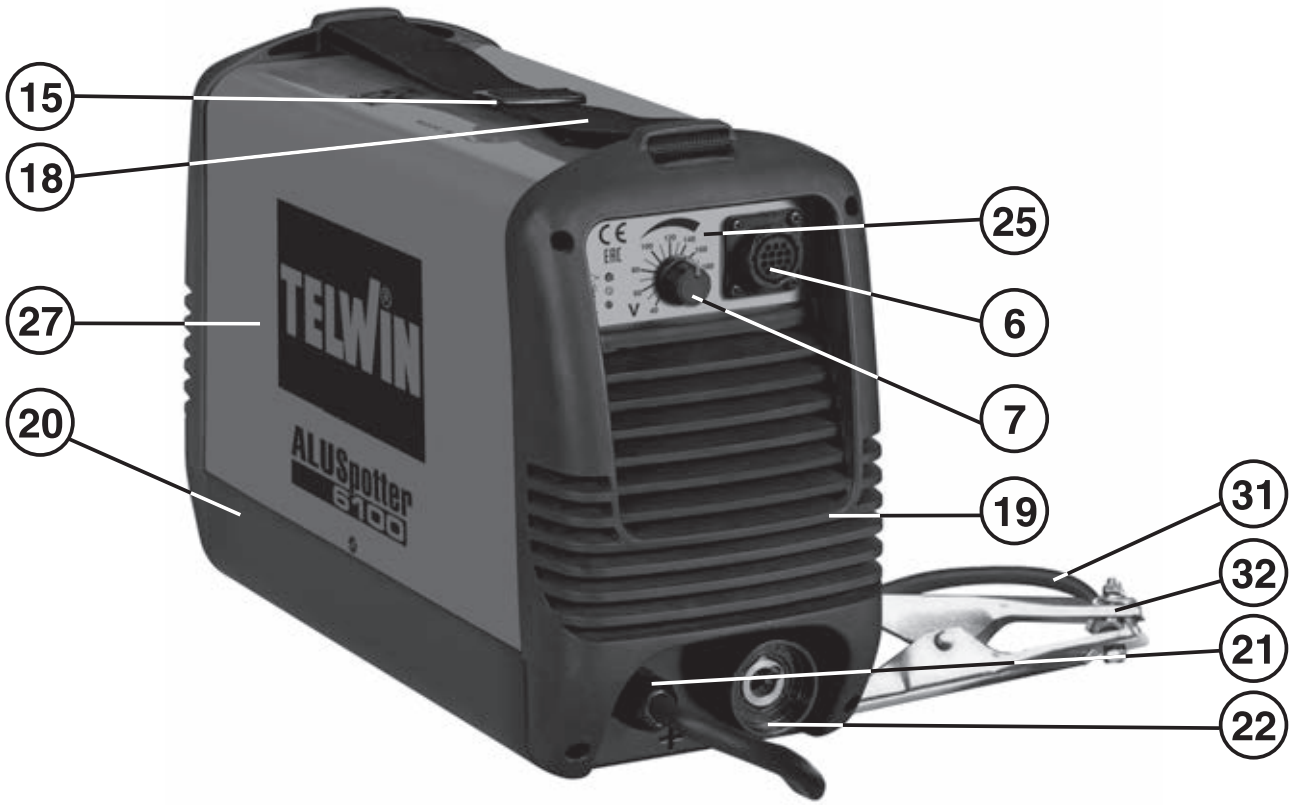

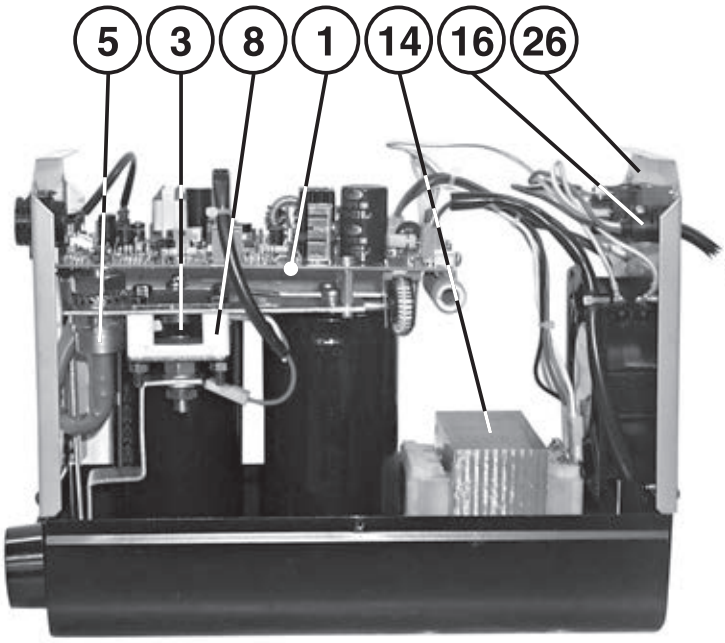

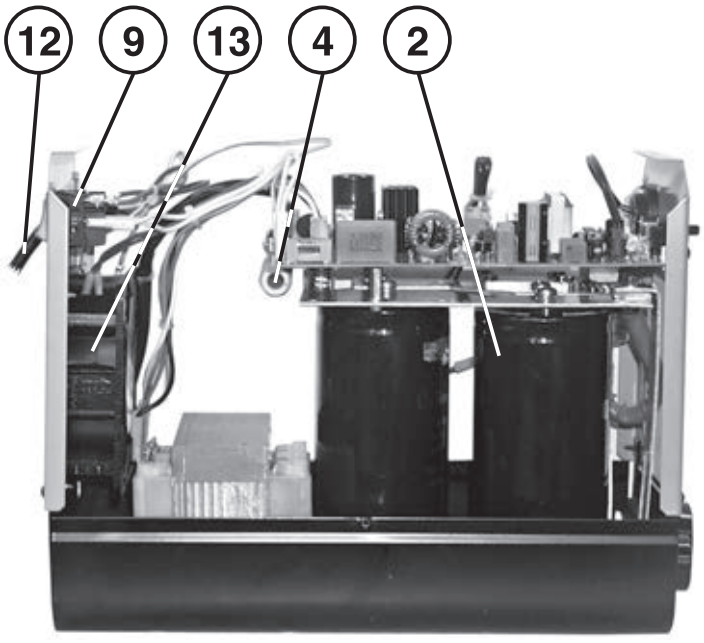

REF.	ELENCO PEZZI DI RICAMBIO PIECES DETACHEES SPARE PARTS LIST ERSATZTEILLISTE PIEZAS DE REPUESTO	CODICE CODE KODE
1	Scheda scarica capacitiva Fiche Pcb Karte Tarjeta	980446
2	Condensatore Condensateur Capacitor Kondensator Condensador	116035
3	Kit scr + cablaggio Kit scr + cable Kit scr + cable Kit scr + kabel Kit scr + cable	981159
4	Resistenza Resistance Resistance Widerstand Resistencia	116043
5	Diodo Diode Diode Diode Diodo	116067
6	Cavo scheda/connettore pulsante Cable platine/poissoir Card/pushbutton cable Karte/druckknopf kabel Cavo tarjeta/pulsador	120878
7	Manopola per potenziometro Poignee pour potentiometre Knob for potentiometer Griff fuer potentiometer Manija para potenciometro	121043
8	Dispositivo di serraggio Dispositif de verrouillage Clamping device Schnellklemmvorrichtung Dispositivo de bloqueo r	121125
9	Interruttore Interupteur Switch Schalter Interruptor	122477
10	Microinterruttore Microinterrupteur Microswitch Microschalter Micro interruptor	122393

REF.	ELENCO PEZZI DI RICAMBIO PIECES DETACHEES SPARE PARTS LIST ERSATZTEILLISTE PIEZAS DE REPUESTO	CODICE CODE KODE
11	Cablaggio pistola Cable pistolet Gun cable Kabel fuer pistole Cable pistola	120576
12	Cavo alim. H05vv-f 3g01.50 L=02.30 Cable alim. H05vv-f 3g01.50 L=02.30 Mains cable h05vv-f 3g01.50 L=02.30 Netzkabel h05vv-f 3g01.50 L=02.30 Cable alim. H05vv-f 3g01.50 L=02.30	132372
13	Elettroventilatore Moteur ventilateur Motor fan Elektroventilator Ventilador	152237
14	Trasformatore potenza Transformateur puissance Power transformer Leistungstransformator Transformador de potencia	169483
15	Fibbia per cinghia Boucle pour courroie Belt buckle Gurtschnalle Hebilla para correa	322065
16	Pressacavo Presse cable Cable bushing Kabelhalter Prensa cable	322112
17	Dado Ecrou Nut Mutter Tuerca	742256
18	Cinghia Courroie Belt Gurt Correa	322408
19	Frontale Partie frontal Front panel Geraetefront Frontal	322497
20	Kit fondo Kit chassis Bottom kit Bodenteil kit Kit fondo	981655

REF.	ELENCO PEZZI DI RICAMBIO PIECES DETACHEES SPARE PARTS LIST ERSATZTEILLISTE PIEZAS DE REPUESTO	CODICE CODE KODE
21	Kit pressacavo + dado Kit presse-cable + ecrou Kit cable bushing + nut Kit kabelhalter + mutter Kit prensa cable + dado	990152
22	Presa atlas 50mmq Prise atlas 50mmq Atlas socket 50mmq Atlas steckdose 50mmq Enchufe atlas 50mmq	712036
23	Kit impugnatura Kit poignee Knob kit Griffkit Kit manija	990781
25	Frontale Partie frontal Front panel Geraetefront Frontal	638577
26	Retro Partie arriere Back panel Rueckseite Trasera	638578
27	Kit mantello Kit capot Cover kit Deckel kit Kit panel de cobertura	990850
28	Cavo 25 mmq 3 m Cable 25 mmq 3 m Cable 25 mmq 3 m Kabel 25 mmq 3 m Cable 25 mmq 3 m	123467
29	Spina atlas 50mmq Fiche atlas 50mmq Atlas plug 50mmq Atlas stecker 50mmq Enchufe atlas 50mmq	712040
31	Cavo 25 mmq 2 m Cable 25 mmq 2 m Cable 25 mmq 2 m Kabel 25 mmq 2 m Cable 25 mmq 2 m	123466
32	Toledo 300 pinza di massa 300a Toledo 300 borne de masse 300a Toledo 300 work clamp 300a Toledo 300 masseklemme 300a Toledo 300 borne de masa 300a	712231

Esploso macchina, Dessin appareil, Machine drawing, Explosions Zeichnung des Geräts, Diseño seccionado maquina.

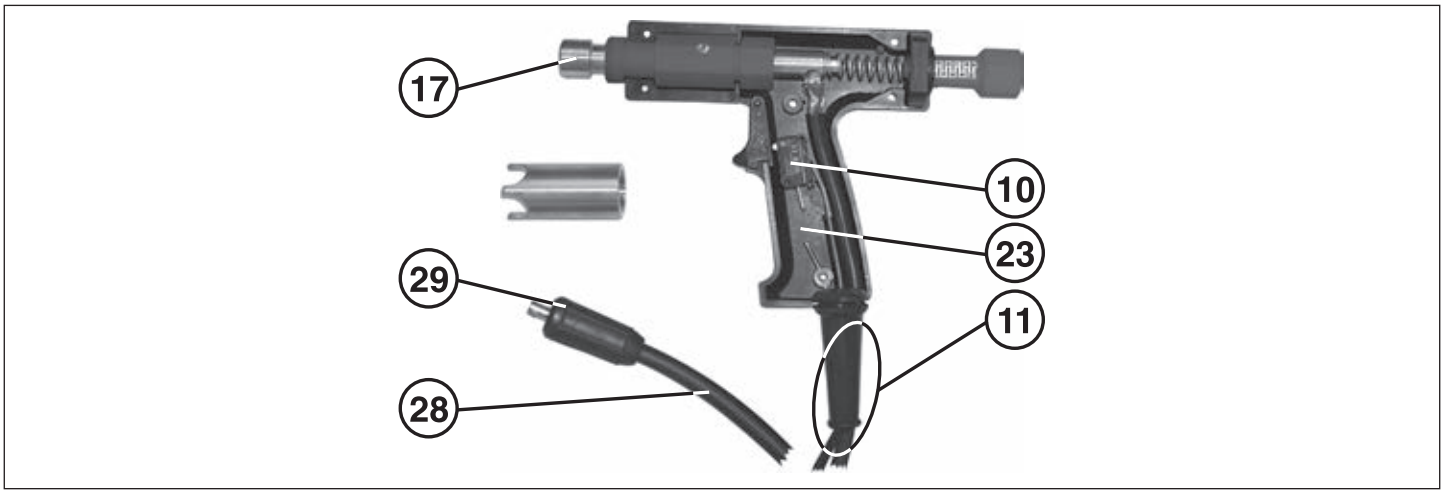

Schema elettrico, Schéma électrique, Diagram, Schaltplan, Esquema de conexiones.

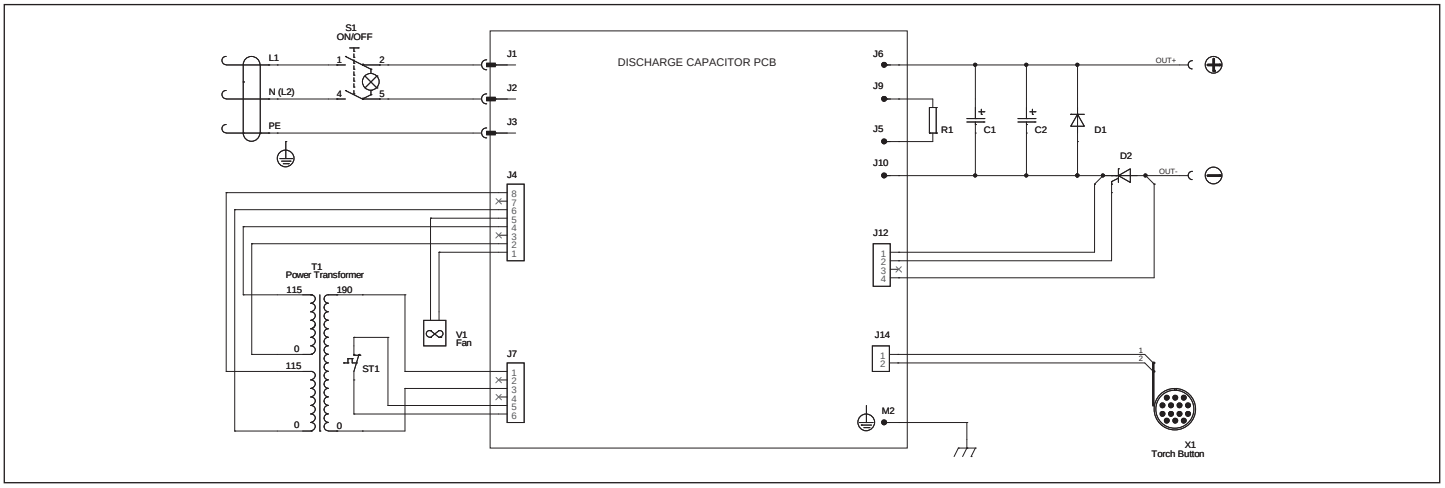

ELENCO PEZZI DI RICAMBIO
LISTE PIECES DETACHEES
SPARE PARTS LIST
ERSATZTEILLISTE
PIEZAS DE REPUESTO

PULLER 4000

Esploso macchina, Dessin appareil, Machine drawing, Explosions Zeichnung des Geräts, Diseño seccionado maquina.

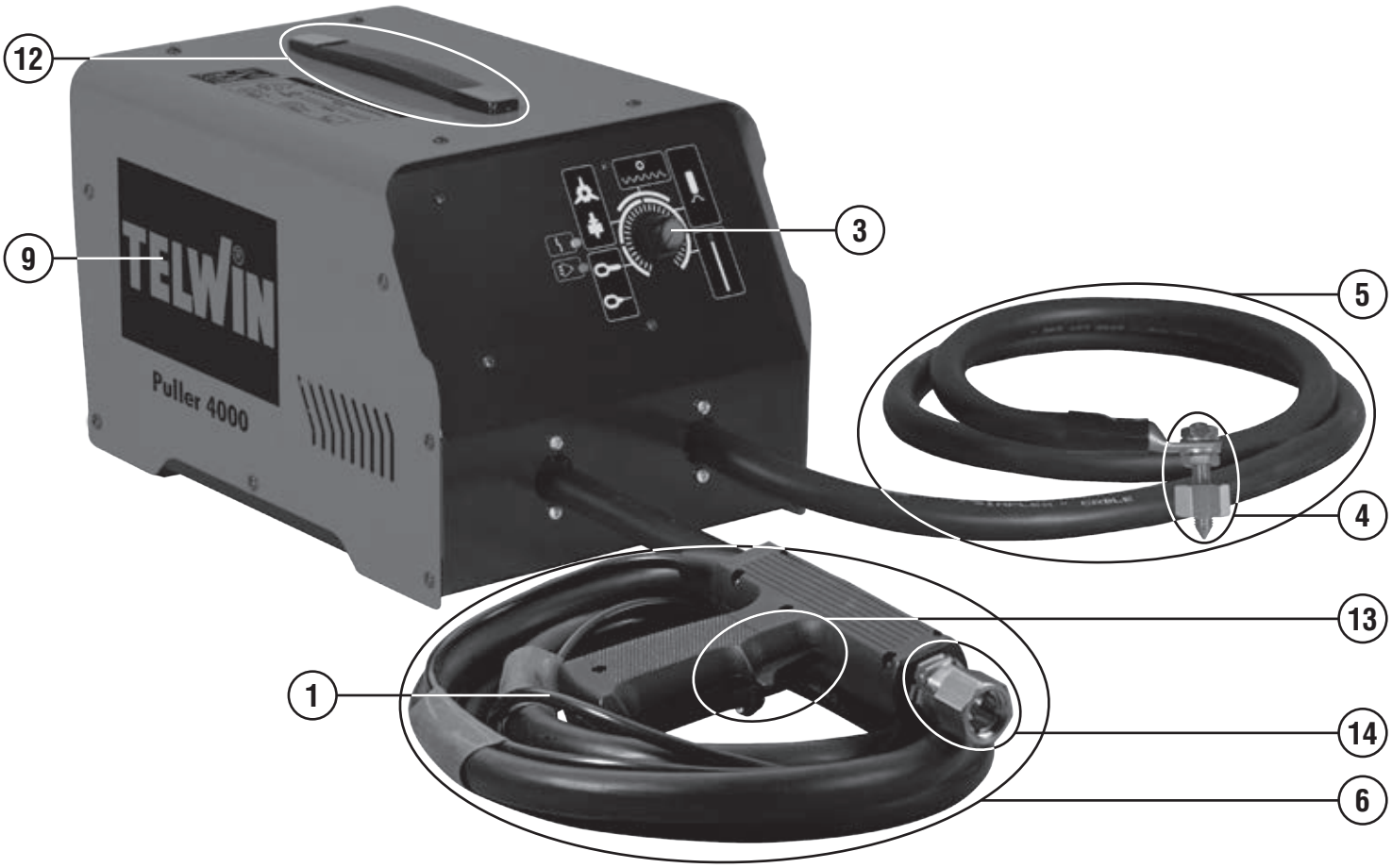

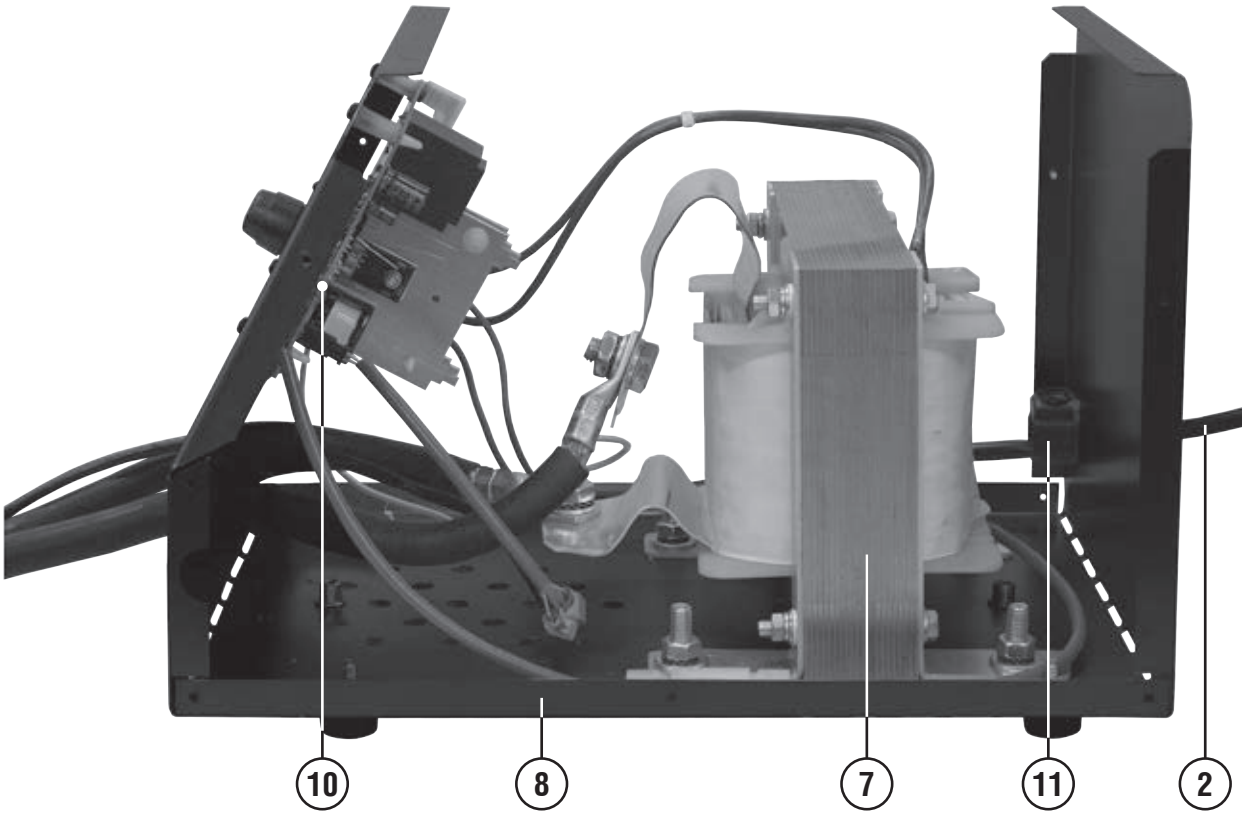

REF.	ELENCO PEZZI DI RICAMBIO PIECES DETACHEES SPARE PARTS LIST ERSATZTEILLISTE PIEZAS DE REPUESTO	CODICE CODE KODE
1	Kit cavo pistola Kit cable pistolet Gun cable kit Pistole kabel kit Kit cable pistola	982361
2	Cavo alim. 3g1.5 2.5m spina schuko Cable alim. 3g1.5 2.5m fiche schuko Mains cable 3g1.5 2.5m schuko plug Netzkabel 3g1.5 2.5m schuko stecker Cable alim. 3g1.5 2.5m esp. Schuko	132319
3	Manopola Poigne Knob Griff Manjia	121394
4	Massa a puntare Masse pour pointage Spot welding earth Schweissbare massenbuchse Masa para punteado	802462
5	Kit cavo + massa a puntare Kit cable + masse pour pointage Cable + pointing mass kit Punktschweissen masse + kabel kit Kit cable + masa para punteado	982276
6	Kit cavo + pistola completo Kit cable de pointage avec pistolet Kit spot-welding cable with gun Kit punktschweisskabel mit pistole Kit cable de puntadura con pistola	982240
7	Kit trasformatore Kit transformateur Transformer kit Kit transformator Kit transformador	982196
8	Kit fondo Kit chassis Bottom kit Bodenteil kit Kit fondo	982198
9	Kit mantello Kit capot Cover kit Deckel kit Kit panel de cobertura	982201
10	Kit scheda Kit fiche Board kit Karte kit Kit tarjeta	982205

REF.	ELENCO PEZZI DI RICAMBIO PIECES DETACHEES SPARE PARTS LIST ERSATZTEILLISTE PIEZAS DE REPUESTO	CODICE CODE KODE
11	Kit pressacavo + ghiera Kit presse cable + embout Kit cable bushing + ring nut Kit kabelhalter + nutmutter Kit prensa cable + virola	990046
12	Kit maniglia Kit poignee Kit handle Kit handgriff Kit manija	990398
13	Kit impugnature + grilletto Kit poignee + trigger Kit handle + trigger Kit handgriffe + trigger Kit manija + trigger	982239
14	Kit mandrino Kit mandrin Mandrel kit Dorn kit Kit mandril	982275

REF.	ELENCO PEZZI DI RICAMBIO PIECES DETACHEES SPARE PARTS LIST ERSATZTEILLISTE PIEZAS DE REPUESTO	CODICE CODE KODE

Schema elettrico, Schéma électrique, Diagram, Schaltplan, Esquema de conexiones.

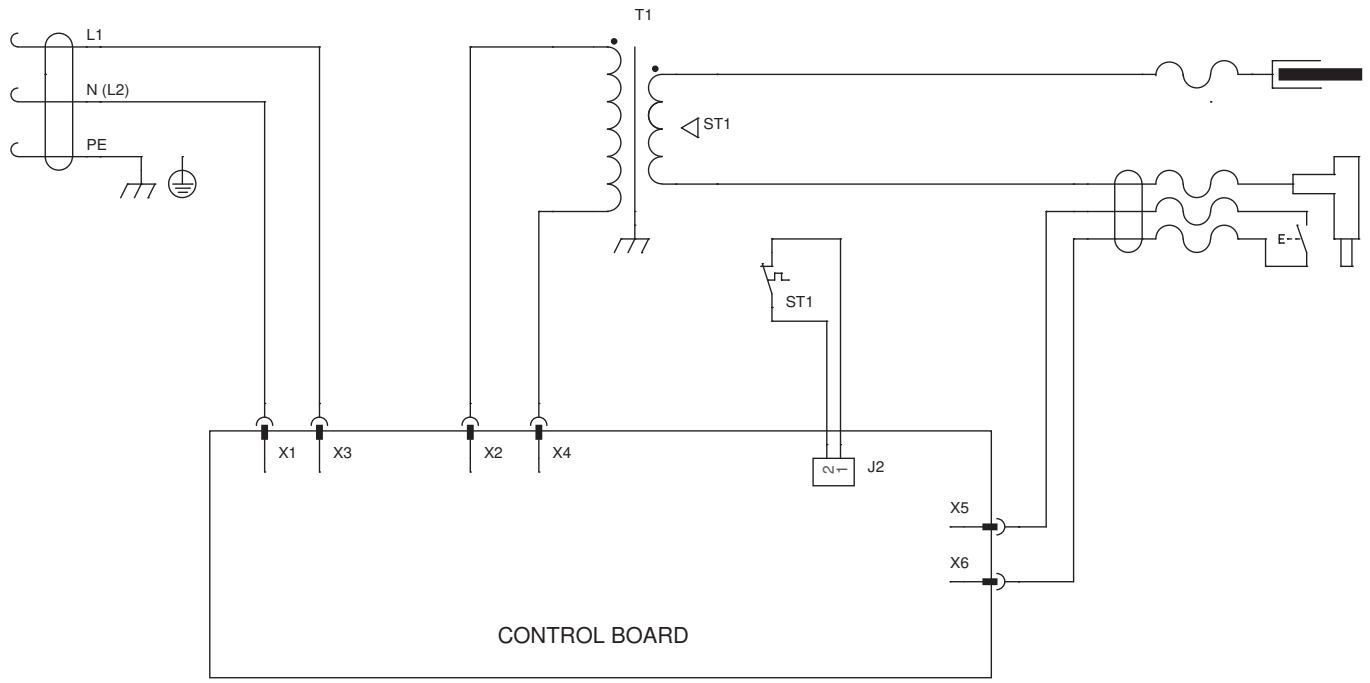

ELENCO PEZZI DI RICAMBIO
LISTE PIECES DETACHEES
SPARE PARTS LIST
ERSATZTEILLISTE
PIEZAS DE REPUESTO

DIGITAL PULLER 5500 DUO

Esploso macchina, Dessin appareil, Machine drawing, Explosions Zeichnung des Geräts, Diseño seccionado maquina.



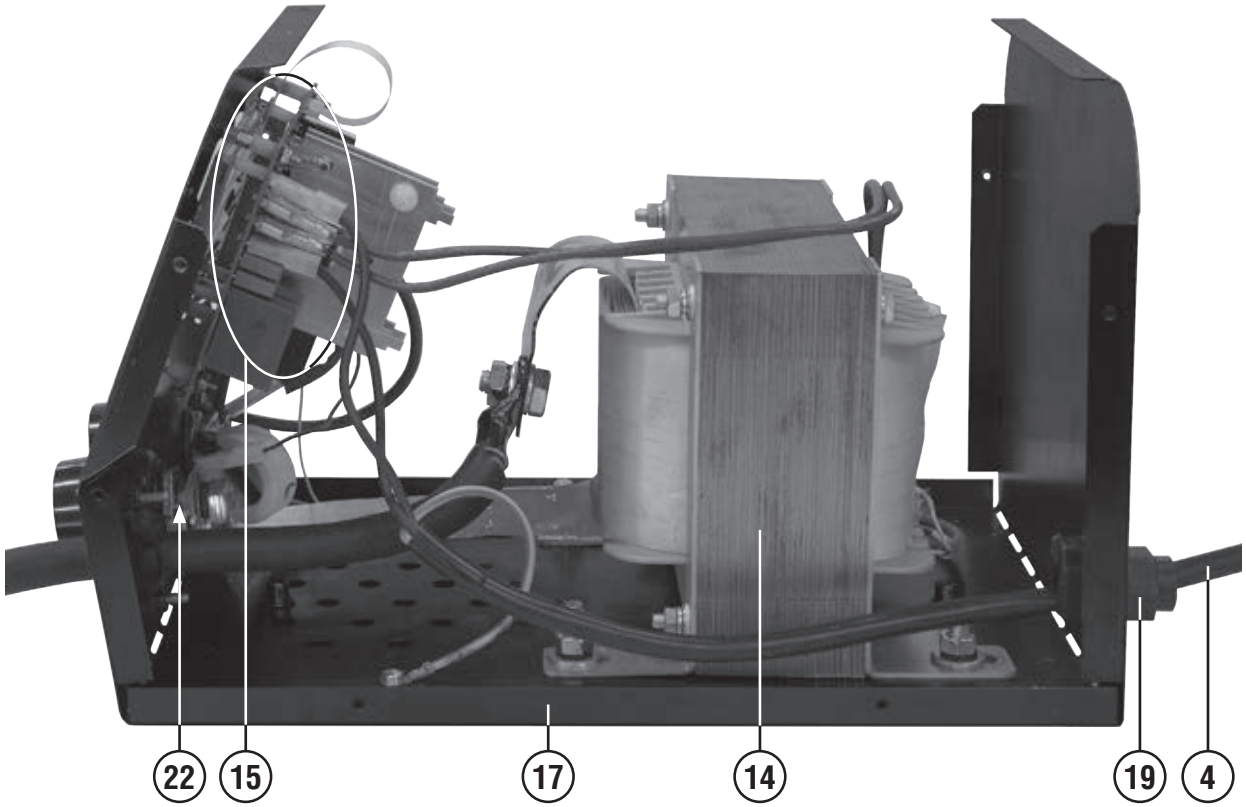

REF.	ELENCO PEZZI DI RICAMBIO PIECES DETACHEES SPARE PARTS LIST ERSATZTEILLISTE PIEZAS DE REPUESTO	CODICE CODE KODE
1	Microinterruttore Microinterrupteur Microswitch Microschalter Microinterruptor	121329
2	Cablaggio pistola Cable pince Clamp cable Zange kabel Cable pinca	124053
3	Cablaggio pulsante Cable poussoir Pushbutton cable Druckknopf kabel Cable pulsador	125036
4	Cavo alim. H05vv-f 3g2.5 4 M Cable alim. H05vv-f 3g2.5 4 M Mains cable h05vv-f 3g2.5 4 M Netzkabel h05vv-f 3g2.5 4 M Cable alim. H05vv-f 3g2.5 4 M	132466
5	Cornice Cadre Frame Rahmen Marco	321348
6	Piedino destro Emboutse droit Right foot Rechten fuss Pie derecho	321368
7	Piedino sinistro Emboutse gauche Left foot Linke fuss Pie izquierdo	321369
8	Pressacavo Presse cable Cable bushing Kabelhalter Prensa cable	322148

REF.	ELENCO PEZZI DI RICAMBIO PIECES DETACHEES SPARE PARTS LIST ERSATZTEILLISTE PIEZAS DE REPUESTO	CODICE CODE KODE
9	Presa atlas 70/95mmq Prise atlas 70/95mmq Atlas socket 70/95mmq Atlas steckdose 70/95mmq Enchufe atlas 70/95mmq	712037
10	Spina atlas 70mmq Fiche atlas 70mmq Atlas plug 70mmq Atlas stecker 70mmq Enchufe atlas 70mmq	712041
11	Mandrino portaelettrodo Mandrin porte electrode Electrode holder mandrel Elektrodenhalter dorn Mandril supporto eletrodo	742633
12	Kit assieme display Kit affichage Display kit Tafel kit Kit pantalla	981505
13	Dado Ecrou Nut Mutter Tuerca	982096
14	Kit trasformatore Kit transformateur Transformer kit Kit transformator Kit transformador	982194
15	Kit scheda Kit fiche Board kit Karte kit Kit tarjeta	982202
16	Kit impugnatura pistola Kit poignee pistolet Gun handle kit Griff kit Kit empunadura	982212

REF.	ELENCO PEZZI DI RICAMBIO PIECES DETACHEES SPARE PARTS LIST ERSATZTEILLISTE PIEZAS DE REPUESTO	CODICE CODE KODE
17	Kit fondo Kit chassis Bottom kit Bodenteil kit Kit fondo	982217
18	Kit mantello Kit capot Cover kit Deckel kit Kit panel de cobertura	982218
19	Kit pressacavo + ghiera Kit presse cable + embout Kit cable bushing + ring nut Kit kabelhalter + nutmutter Kit prensa cable + virola	990046
20	Kit impugnatura pistola Kit poignee pistolet Gun handle kit Griff kit Kit empunadura	990240
21	Kit maniglia Kit poignee Kit handle Kit handgriff Kit manija	990398
22	Cablaggio scheda Cable de platine Card cable Karte kabel Cable de tarjeta	125228
23	Studder gun automatic 70 l=2,5m ax 70 Studder gun automatic 70 l=2,5m ax 70 Studder gun automatic 70 l=2,5m ax 70 Studder gun automatic 70 l=2,5m ax 70 Studder gun automatic 70 l=2,5m ax 70	801076
24	Studder gun basic l=2,5m atlas 70mmq Studder gun basic l=2,5m atlas 70mmq Studder gun basic l=2,5m atlas 70mmq Studder gun basic l=2,5m atlas 70mmq Studder gun basic l=2,5m atlas 70mmq	801075

Esploso macchina, Dessin appareil, Machine drawing, Explosions Zeichnung des Geräts, Diseño seccionado maquina.

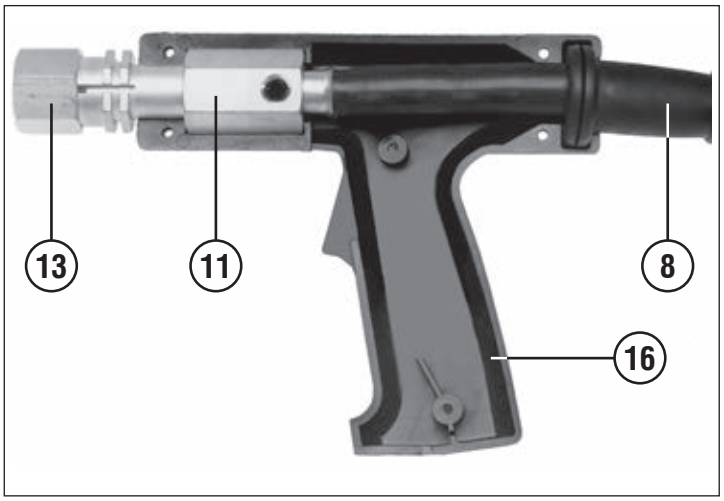

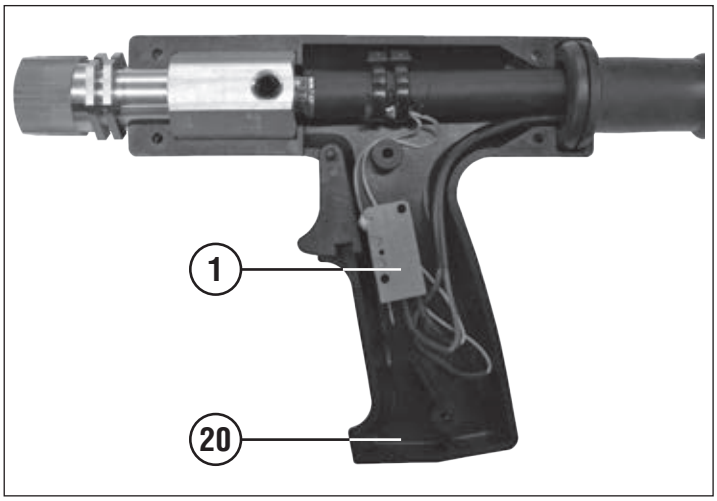

Schema elettrico, Schéma électrique, Diagram, Schaltplan, Esquema de conexiones.

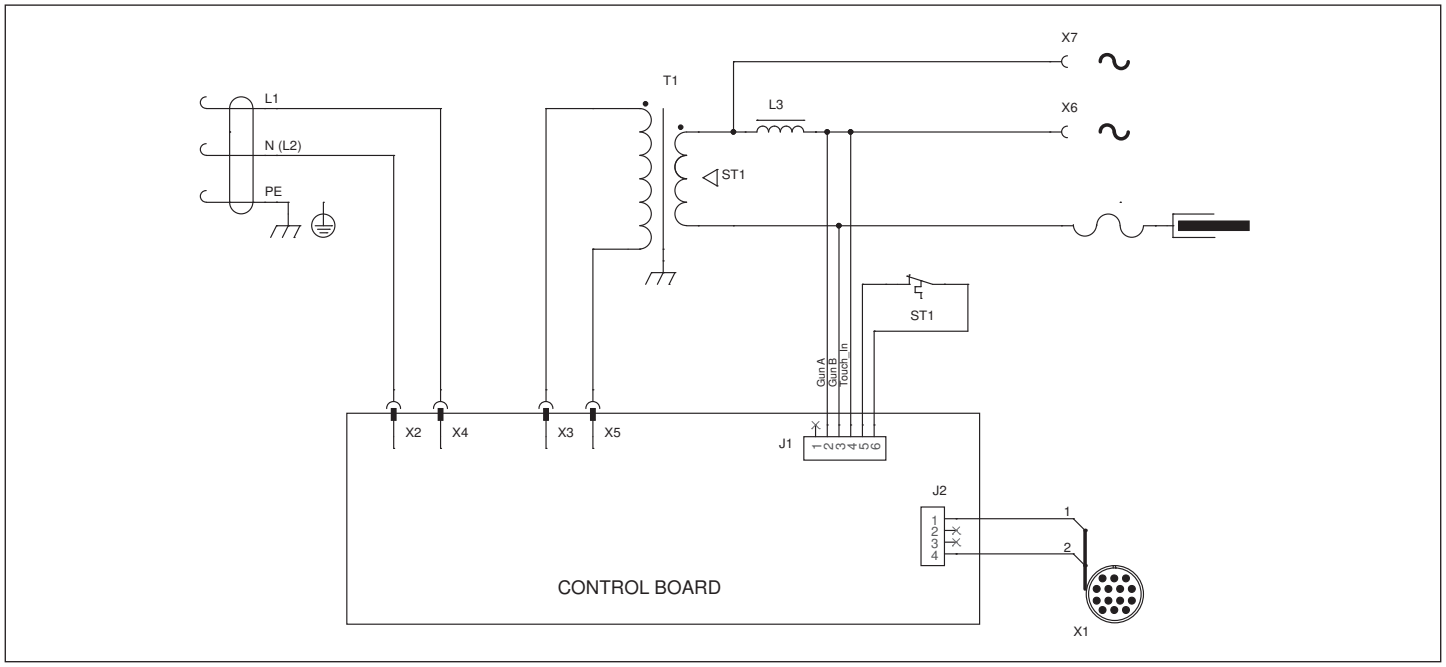

ELENCO PEZZI DI RICAMBIO
LISTE PIECES DETACHEES
SPARE PARTS LIST
ERSATZTEILLISTE
PIEZAS DE REPUESTO

DIGITAL PULLER 5500

Esploso macchina, Dessin appareil, Machine drawing, Explosions Zeichnung des Geräts, Diseño seccionado maquina.



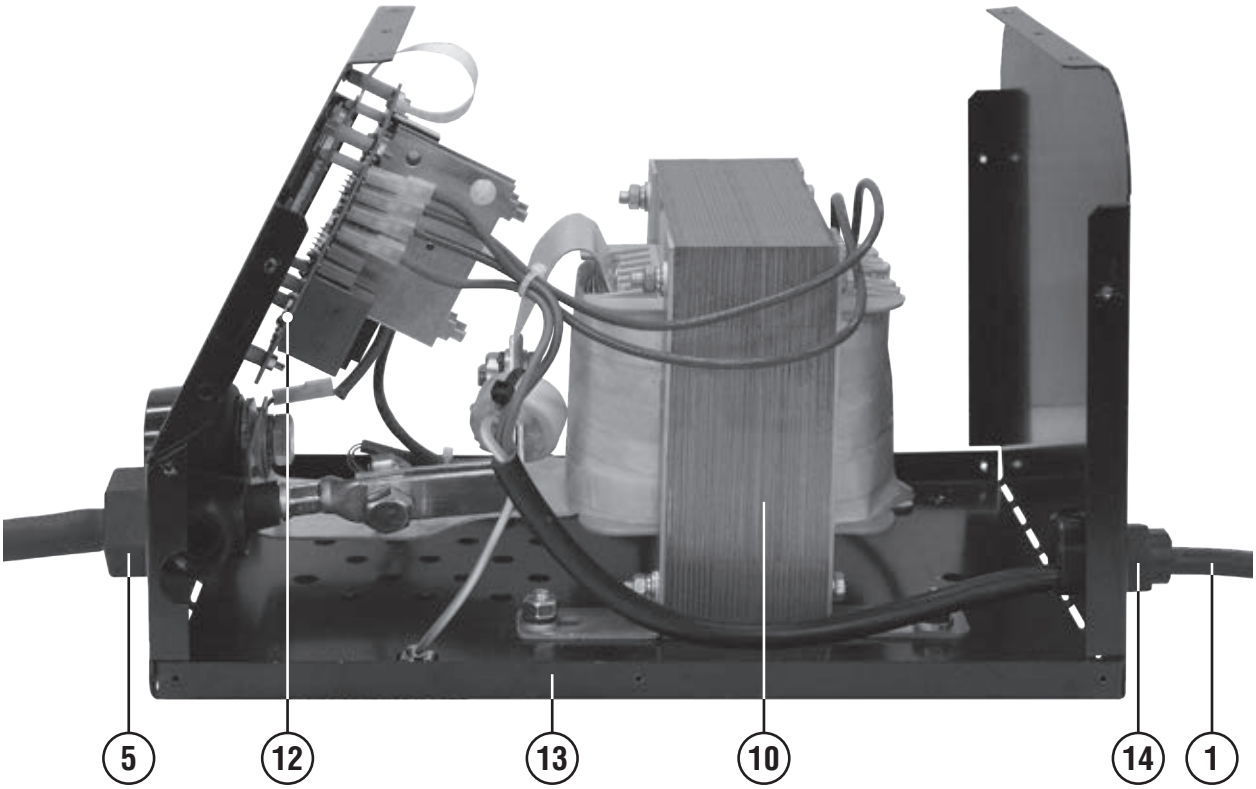

REF.	ELENCO PEZZI DI RICAMBIO PIECES DETACHEES SPARE PARTS LIST ERSATZTEILLISTE PIEZAS DE REPUESTO	CODICE CODE KODE
1	Cavo alim.H05vv-f 3g02.50 L=04.00 Cable alim. H05vv-f 3g02.50 L=04.00 Mains cable h05vv-f 3g02.50 L=04.00 Netzkabel h05vv-f 3g02.50 L=04.00 Cable alim. H05vv-f 3g02.50 L=04.00	132475
2	Kit maniglia Kit poignee Kit handle Kit handgriff Kit manija	990398
3	Cornice Cadre Frame Rahmen Marco	321348
4	Pressacavo Presse cable Cable bushing Kabelhalter Prensa cable	322148
5	Pressacavo Presse cable Cable bushing Kabelhalter Prensa cable	322414
6	Spina atlas 70mmq Fiche atlas 70mmq Atlas plug 70mmq Atlas stecker 70mmq Enchufe atlas 70mmq	712041
7	Mandrino portaelettrodo Mandrin porte electrode Electrode holder mandrel Elektrodenhalter dorn Mandril supporto eletrodo	742633
8	Kit assieme display Kit affichage Display kit Tafel kit Kit pantalla	981505

REF.	ELENCO PEZZI DI RICAMBIO PIECES DETACHEES SPARE PARTS LIST ERSATZTEILLISTE PIEZAS DE REPUESTO	CODICE CODE KODE
9	Dado Ecrou Nut Mutter Tuerca	982096
10	Kit trasformatore Kit transformateur Transformer kit Kit transformator Kit transformador	982195
11	Kit mantello Kit capot Cover kit Deckel kit Kit panel de cobertura	982199
12	Kit scheda Kit fiche Board kit Karte kit Kit tarjeta	982203
13	Kit fondo Kit chassis Bottom kit Bodenteil kit Kit fondo	982204
14	Kit pressacavo + ghiera Kit presse cable + embout Kit cable bushing + ring nut Kit kabelhalter + nutmutter Kit prensa cable + virola	990046
15	Kit impugnatura pistola Kit poignee pistolet Gun handle kit Griff kit Kit empunadura	990240
16	Presa atlas 70/95mmq Prise atlas 70/95mmq Atlas socket 70/95mmq Atlas steckdose 70/95mmq Enchufe atlas 70/95mmq	712037

REF.	ELENCO PEZZI DI RICAMBIO PIECES DETACHEES SPARE PARTS LIST ERSATZTEILLISTE PIEZAS DE REPUESTO	CODICE CODE KODE

Esploso macchina, Dessin appareil, Machine drawing, Explosions Zeichnung des Geräts, Diseño seccionado maquina.

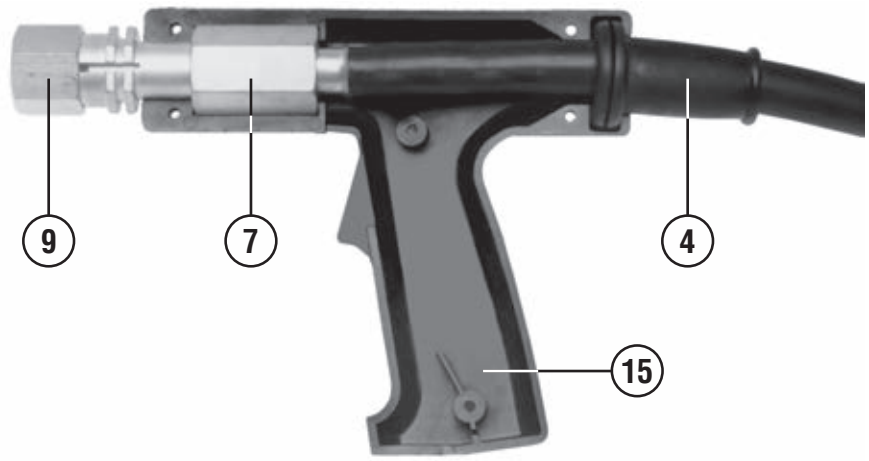

Schema elettrico, Schéma électrique, Diagram, Schaltplan, Esquema de conexiones.

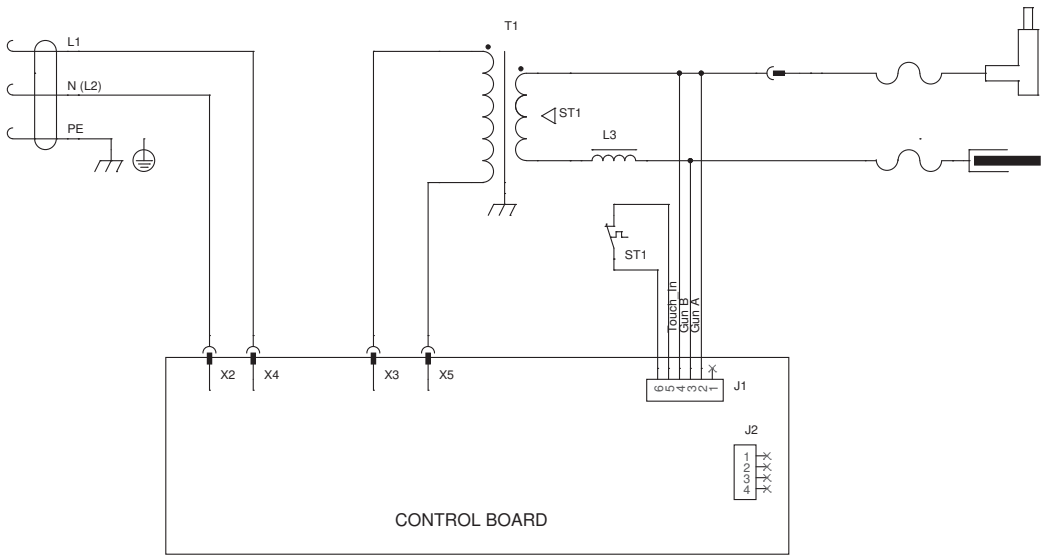

ELENCO PEZZI DI RICAMBIO
LISTE PIECES DETACHEES
SPARE PARTS LIST
ERSATZTEILLISTE
PIEZAS DE REPUESTO

DIGITAL CAR SPOTTER 5500

Esploso macchina, Dessin appareil, Machine drawing, Explosions Zeichnung des Geräts, Diseño seccionado maquina.



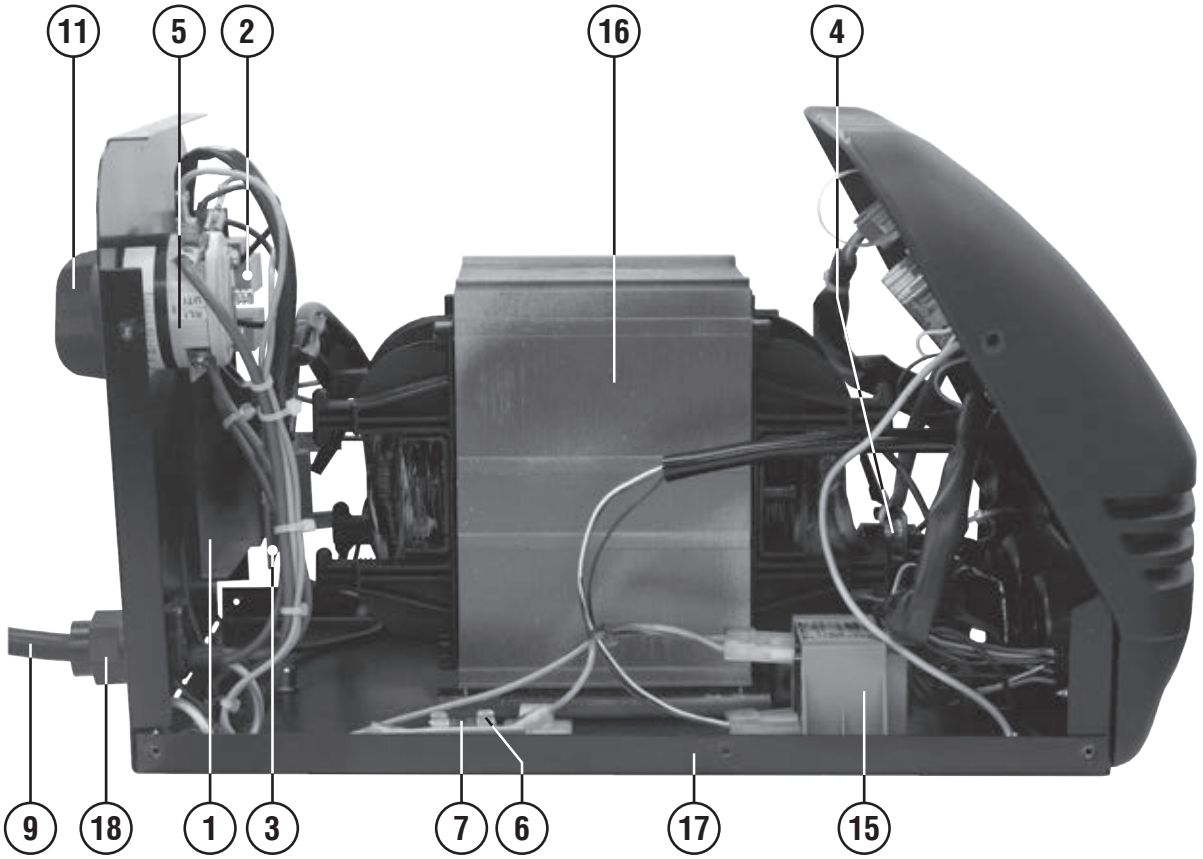

REF.	ELENCO PEZZI DI RICAMBIO PIECES DETACHEES SPARE PARTS LIST ERSATZTEILLISTE PIEZAS DE REPUESTO	CODICE CODE KODE
1	Scr Scr Scr Scr Scr	112692
2	Scheda filtro Platine filtre Filter card Filterkarte Tarjeta filtro	114627
3	Scheda snubber scr Platine snubber scr Scr snubber card Scr snubber karte Tarjeta scr snubber	114628
4	Cablaggio termostato scheda Cable thermostat fiche Card thermostat cable Karte thermostat kabel Cable termostato ficha	120256
5	Commutatore Commutateur Switch Schalter Conmutador	121507
6	Portafusibile Porte fusible Fuse holder Sicherungshalter Porta fusible	122403
7	Fusibile Fusible Fuse Sicherung Fusible	122913
8	Cablaggio scheda/connettore Cable de platine/connecteur Card/connector cable Karte/verbinderkabel Cable de tarjeta/conectador	124803
9	Cavo alim. 3g2.5 4 M Cable alim. 3g2.5 4 M Mains cable 3g2.5 4 M Netzkabel 3g2.5 4 M Cable alim. 3g2.5 4 M	132299
10	Frontale Partie frontal Front panel Gerätefront Frontal	322472

REF.	ELENCO PEZZI DI RICAMBIO PIECES DETACHEES SPARE PARTS LIST ERSATZTEILLISTE PIEZAS DE REPUESTO	CODICE CODE KODE
11	Assieme manopola per commutatore Set poigne pour commutateur Switch knob set Umschaltergriff set Set manjia para conmutador	323101
12	Presa atlas 70/95mmq Prise atlas 70/95mmq Atlas socket 70/95mmq Atlas steckdose 70/95mmq Enchufe atlas 70/95mmq	712037
13	Kit ass.Pannello+scheda Kit panneau + fiche Panel + card kit Tafel + karte kit Kit panel+tarjeta	981563
14	Kit mantello Kit capot Cover kit Deckelkit Kit panel de cobertura	981564
15	Kit trasformatore ausiliario Kit transformateur auxiliaire Auxiliary transformer kit Hilfstransformatorkit Kit transformador auxiliar	981565
16	Kit trasformatore Kit trasformateur Transformer kit Trafokit Kit transformador	981566
17	Kit fondo Kit chassis Bottom kit Bodenteil kit Kit fondo	981580
18	Kit pressacavo + ghiera Kit presse cable + embout Kit cable bushing + ring nut Kit kabelhalter + nutmutter Kit prensa cable + virola	990046
19	Kit maniglia Kit poignee Kit handle Kit handgriff Kit manija	990398
20	Kit assieme display Kit affichage Display kit Tafel kit Kit pantalla	981505

REF.	ELENCO PEZZI DI RICAMBIO PIECES DETACHEES SPARE PARTS LIST ERSATZTEILLISTE PIEZAS DE REPUESTO	CODICE CODE KODE

Schema elettrico, Schéma électrique, Diagram, Schaltplan, Esquema de conexiones.

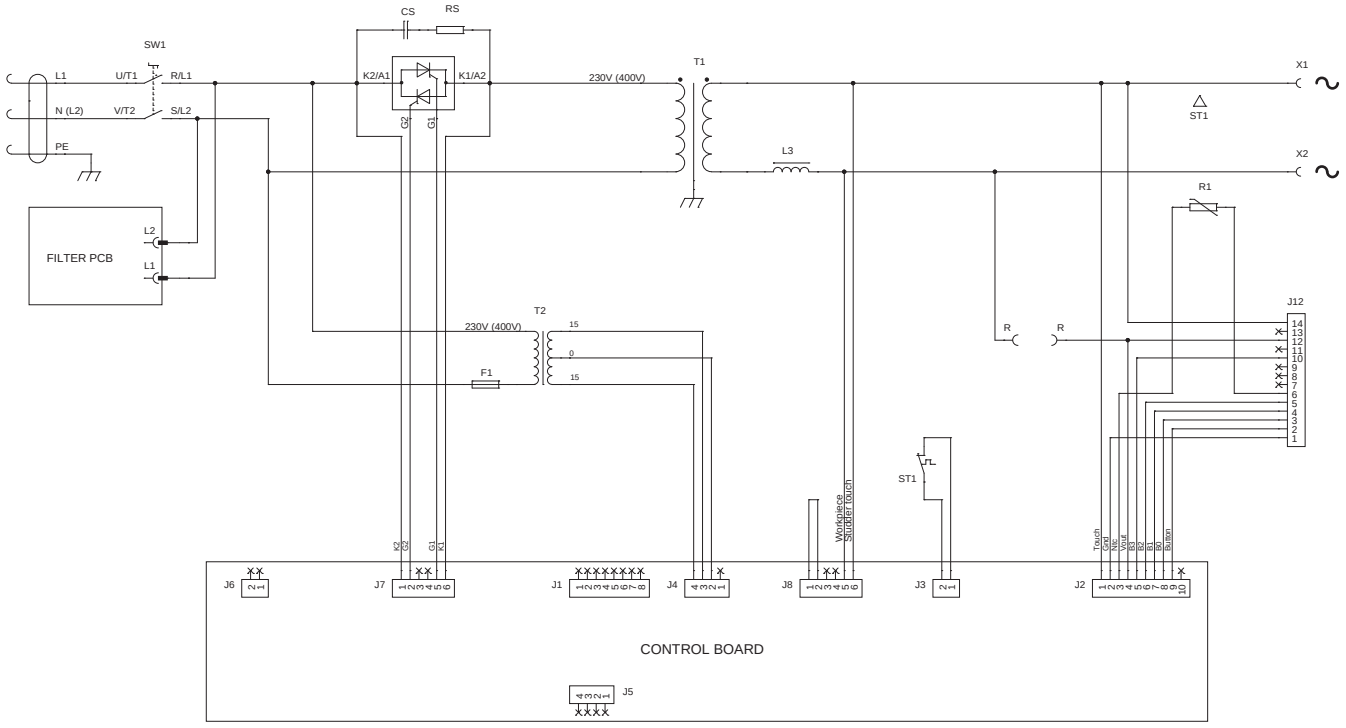

ELENCO PEZZI DI RICAMBIO
LISTE PIECES DETACHEES
SPARE PARTS LIST
ERSATZTEILLISTE
PIEZAS DE REPUESTO

DIGITAL SPOTTER 7000

TELWIN

Esploso macchina, Dessin appareil, Machine drawing, Explosions Zeichnung des Geräts, Diseño seccionado maquina.

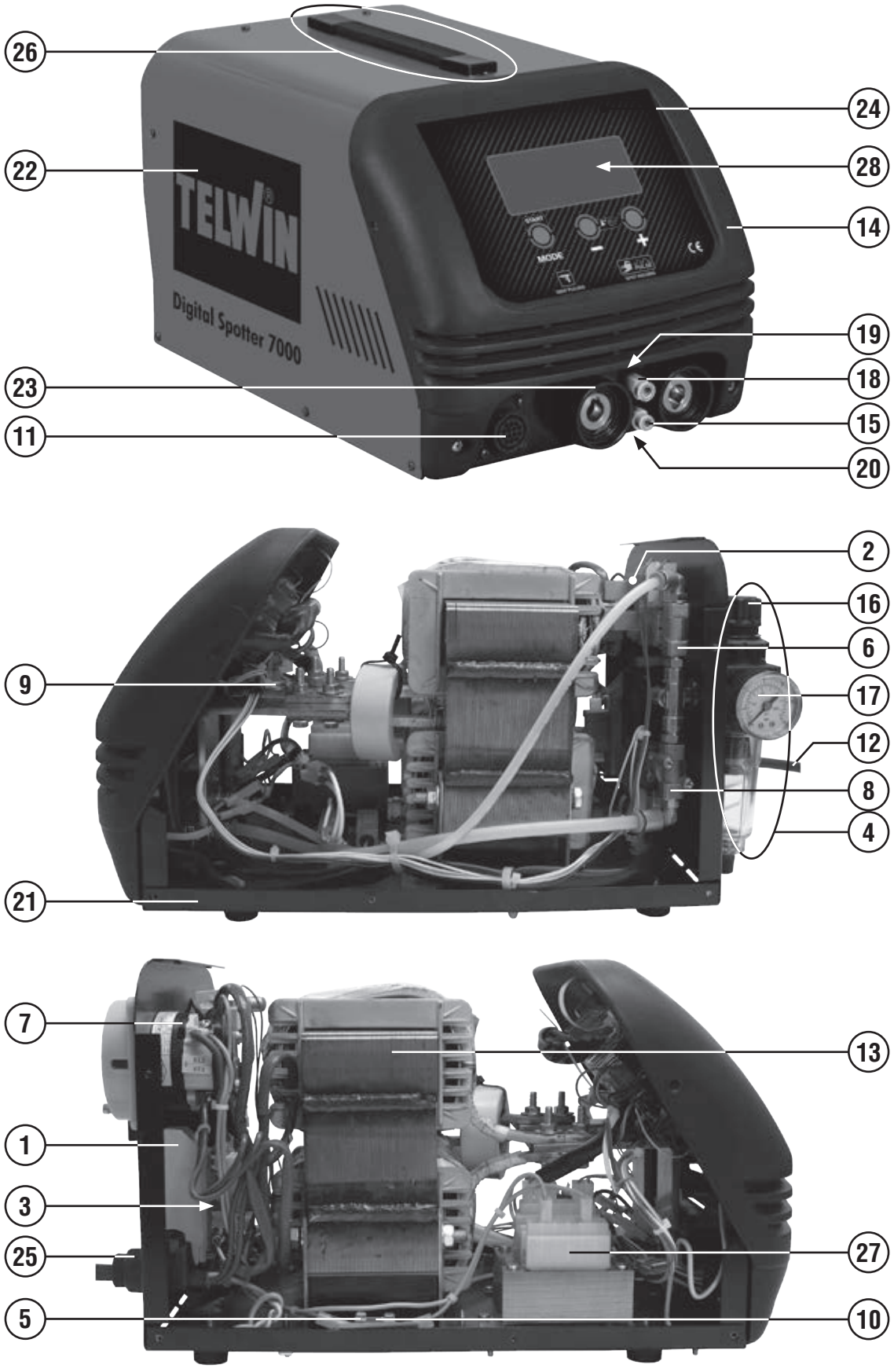

REF.	ELENCO PEZZI DI RICAMBIO PIECES DETACHEES SPARE PARTS LIST ERSATZTEILLISTE PIEZAS DE REPUESTO	CODICE CODE KODE
1	Scr Scr Scr Scr Scr	112692
2	Scheda filtro Platine filtre Filter card Filterkarte Tarjeta filtro	114627
3	Scheda snubber scr Platine snubber scr Scr snubber card Scr snubber karte Tarjeta scr snubber	114628
4	Assieme riduttore + manometro Reducteur + manometer Gas regulator + manometer Druckminderer + manometer Reductor de presion + manometro	120036
5	Portafusibile Porte fusible Fuse holder Sicherungshalter Porta fusible	122403
6	Elettrovalvola Electrovanne Electrovalve Elektroventil Electrovalvula	121801
7	Commutatore Commutateur Switch Schalter Conmutador	122531
8	Elettrovalvola Electrovanne Electro-valve Elektroventil Electrovalvola	122798
9	Termostato Thermostat Thermal switch Thermostat Termostato	122859
10	Fusibile Fusible Fuse Sicherung Fusible	122875
11	Cablaggio scheda/connettore Cable fiche/conecteur Card/connector cable Karte/verbinderkabel Cable tarjeta/conectador	124772
12	Cavo alim. 3g2.5 4 M Cable alim. 3g2.5 4 M Mains cable 3g2.5 4 M Netzkabel 3g2.5 4 M Cable alim. 3g2.5 4 M	132299
13	Trasformatore 400v Transformateur 400v Transformer 400v Transformator 400v Transformador 400v	169209
14	Frontale Partie frontal Front panel Gerätefront Frontal	322472
15	Attacco rapido Attelage rapide Quick connection Schnellanschluss Conexion rapida	602116
16	Riduttore di pressione Reducteur de pression Air regulator Druckminderer Reductor de presion	602071
17	Manometro Manometre Manometer Manometer Manometro	602072
18	Attacco rapido Attelage rapide Quick connection Schnellanschluss Conexion rapida	602000
19	Attacco rapido Attelage rapide Quick connection Schnellanschluss Conexion rapida	602341
20	Attacco rapido Attelage rapide Quick connection Schnellanschluss Conexion rapida	602137
21	Kit fondo Kit chassis Bottom kit Bodenteil kit Kit fondo	981573
22	Kit mantello Kit capot Cover kit Deckelkit Kit panel de cobertura	981562
23	Presa atlas 70/95mmq Prise atlas 70/95mmq Atlas socket 70/95mmq Atlas steckdose 70/95mmq Enchufe atlas 70/95mmq	712037
24	Kit ass. Pannello + scheda Kit panneau + fiche Panel + card kit Tafel + karte kit Panel + tarjeta kit	981550
25	Kit pressacavo + ghiera Kit presse cable + embout Kit cable bushing + ring nut Kit kabelhalter + nutmutter Kit prensa cable + virola	990046
26	Kit maniglia Kit poignee Kit handle Kit handgriff Kit manija	990398
27	Trasformatore ausiliario Transformateur auxiliaire Auxiliary transformer Hilfstransformator Transformador auxiliar	990598
28	Kit assieme display Kit affichage Display kit Tafel kit Kit pantalla	981505

Schema elettrico, Schéma électrique, Diagram, Schaltplan, Esquema de conexiones.

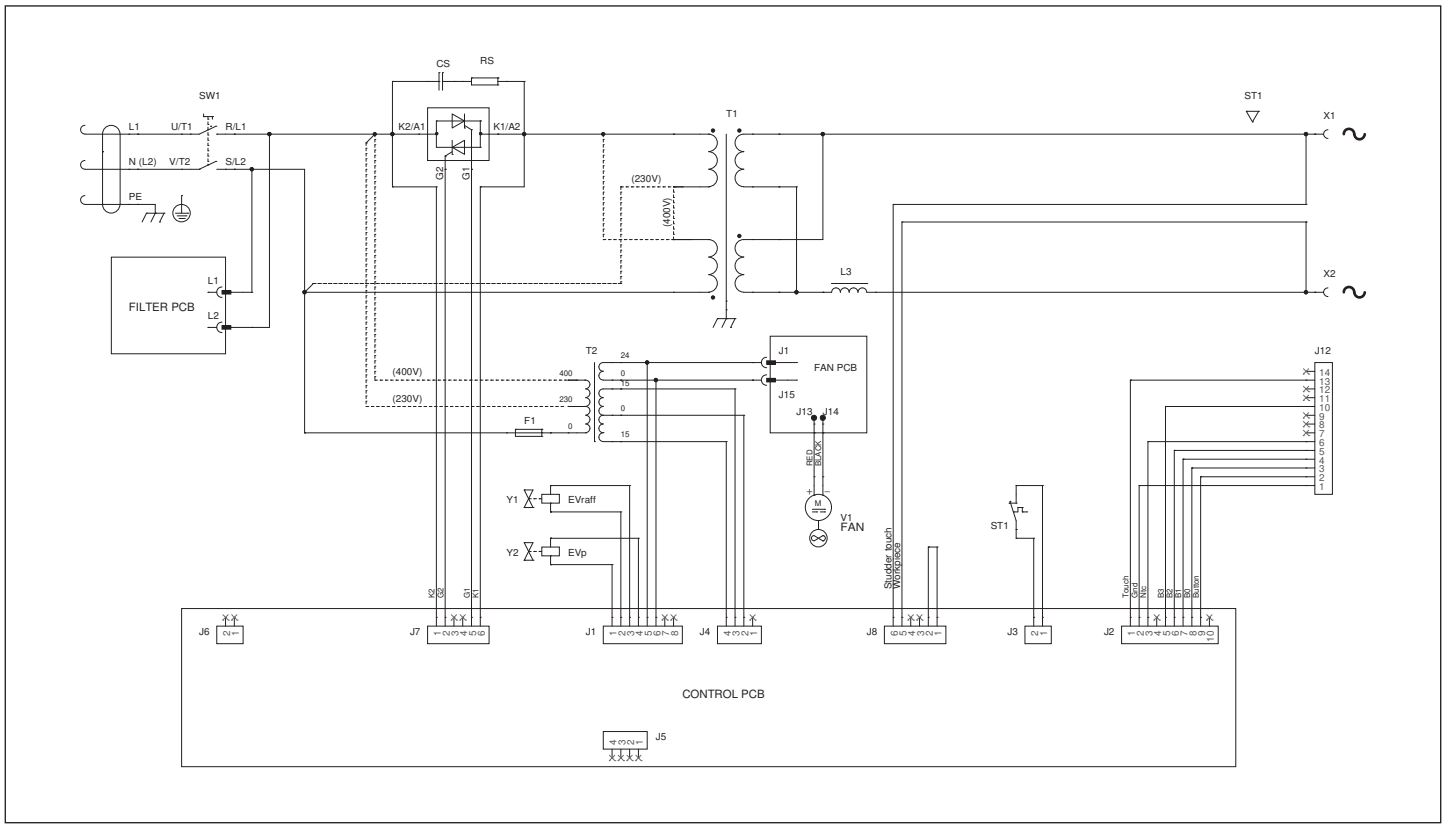

ELENCO PEZZI DI RICAMBIO
LISTE PIECES DETACHEES
SPARE PARTS LIST
ERSATZTEILLISTE
PIEZAS DE REPUESTO

DIGITAL SPOTTER 9000

Esploso macchina, Dessin appareil, Machine drawing, Explosions Zeichnung des Geräts, Diseño seccionado maquina.

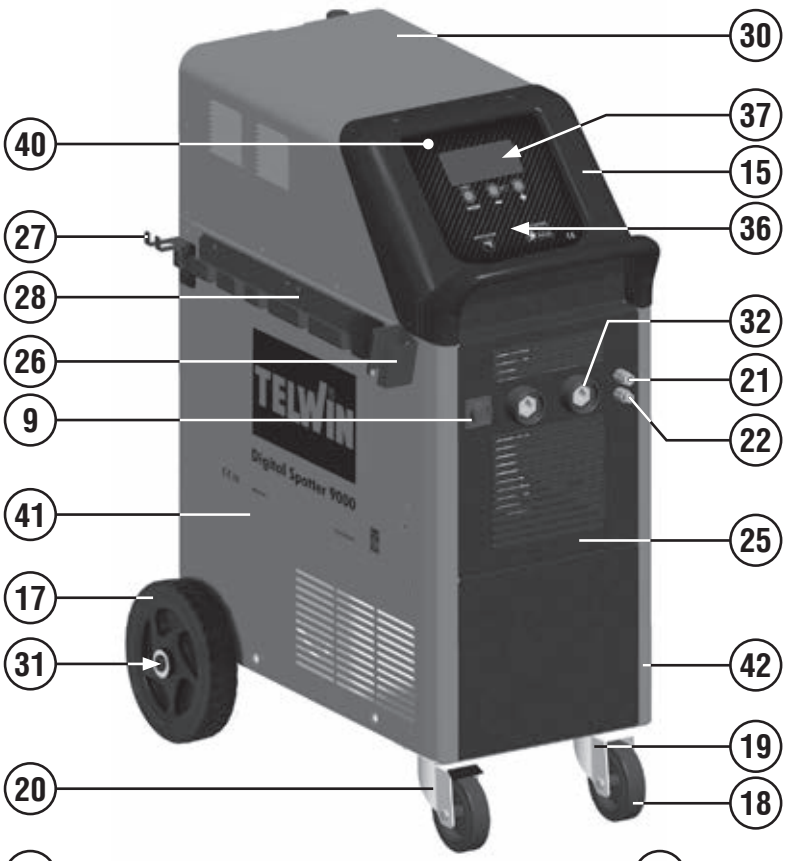

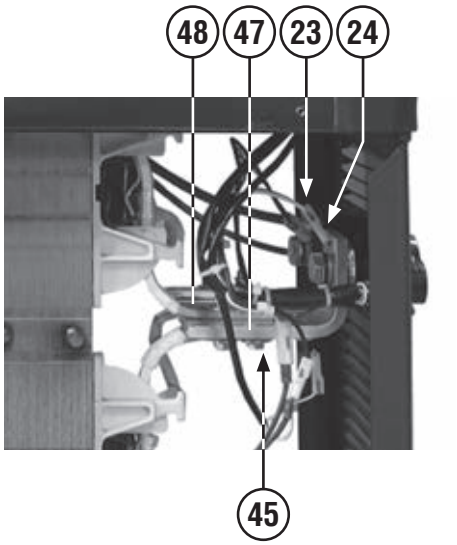

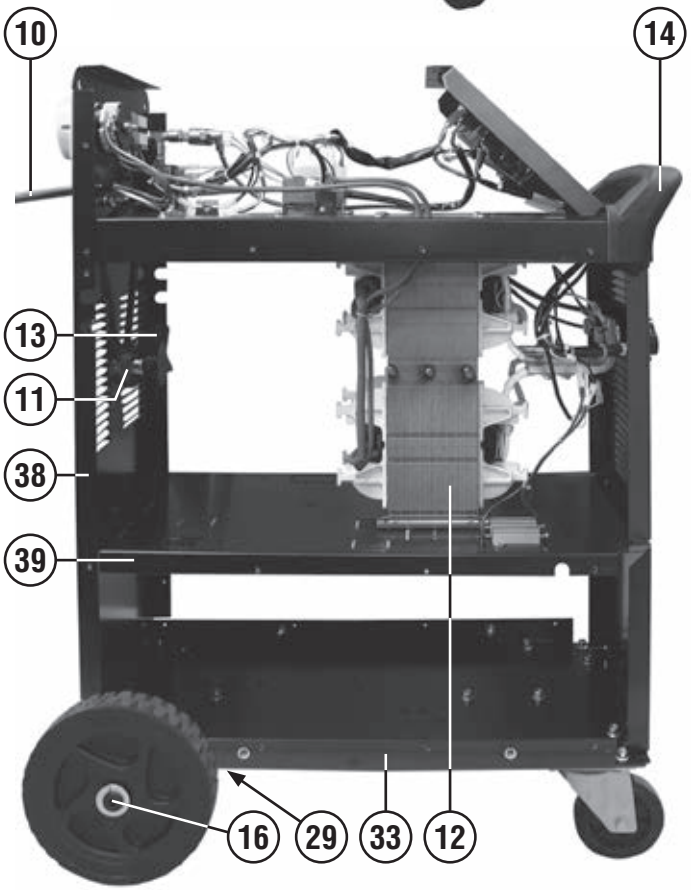

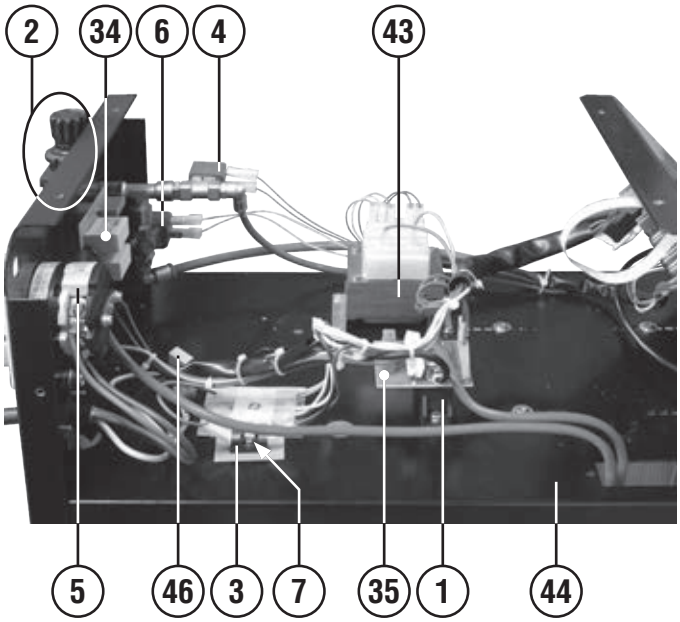

REF.	ELENCO PEZZI DI RICAMBIO PIECES DETACHEES SPARE PARTS LIST ERSATZTEILLISTE PIEZAS DE REPUESTO	CODICE CODE KODE
1	Scr Scr Scr Scr Scr	112692
2	Assieme riduttore + manometro Reducteur + manometer Gas regulator + manometer Druckminderer + manometer Reductor de presion + manometro	120036
3	Portafusibile Porte fusible Fuse holder Sicherungshalter Porta fusible	122403
4	Elettrovalvola Electrovanne Electrovalve Elektroventil Electrovalvula	121801
5	Commutatore Commutateur Switch Schalter Conmutador	122531
6	Elettrovalvola Electrovanne Electro-valve Elektroventil Electrovalvola	122798
7	Fusibile Fusible Fuse Sicherung Fusible	122875
9	Cablaggio scheda/connettore Cable de platine/connecteur Card/connector cable Karte/verbinderkabel Cable de tarjeta/conectador	124727
10	Cavo alim. 3g4 4 m Cable alim. 3g4 4 m Mains cable 3g4 4 m Netzkabel 3g4 4 m Cable alim. 3g4 4 m	132101
11	Motore ventilatore Moteur ventilateur Fan motor Ventilatormotor Motor ventilacion	152080
12	Trasformatore 400v Transformateur 400v Transformer 400v Transformator 400v Transformador 400v	169826
13	Ventola Helice Fan blade Flügelrad Aventador	312025
14	Manico Poignee Handle Handgriff Manija	312328
15	Cornice Cadre Frame Rahmen Marco	321076
16	Tappo blocca ruote Bouchon ferme roue Wheel locking ring Radsperrestopfen Tapon de bloqueo rueda	322102
17	Ruota Roue Wheel Rad Rueda	321390
18	Ruota Roue Wheel Rad Rueda	322246
19	Supporto girevole Support tournant Swivel support Drehbarerhalter Sosten giratorio	422969
20	Supporto girevole + freno Support tournant + frein Swivel support + brake Drehbarerhalter + bremse Sosten giratorio + freno	484441
21	Attacco rapido Attelage rapide Quick connection Schnellanschluss Conexion rapida	602000
22	Attacco rapido Attelage rapide Quick connection Schnellanschluss Conexion rapida	602116
23	Attacco rapido Attelage rapide Quick connection Schnellanschluss Conexion rapida	602137
24	Attacco rapido Embout rapide Quick connection Anschluss Conexion	602276
25	Kit frontale inferiore+ etichetta Kit partie frontal inferieur+etiquette Lower front panel + label kit Geraetefront unten + aufkleber kit Kit frontal inferior + etiqueta	981529
26	Staffa portapistola Bride suport pistolet Gunholder braket Pistolehalterbuegel Estribo sosten pistola	644457
27	Supporto estrattore Suport extracteur Extractor holder Extraktorhalterung Sosten extractor	644458
28	Staffa portaelettrodi Bride suportelectrode Electrodeholder bracket Elektrodenhalterbuegel Estribo sosten electrodo	644822
29	Staffa asse ruote Bride axe roues Wheels axle braket Radachsebuegel Estribo eje ruedas	645455
30	Mantello Capot Cover Deckel Panel de cobertura	651184
31	Asse per ruote Axe roues Wheel axle Radachse Eje ruedas	681152
32	Presa atlas 70/95mmq Prise atlas 70/95mmq Atlas socket 70/95mmq Atlas steckdose 70/95mmq Enchufe atlas 70/95mmq	712037
33	Kit fondo Kit chassis Bottom kit Bodenteil kit Kit fondo	981290
34	Kit scheda filtro Kit platine filtre Filter card kit Filterkartekit Kit tarjeta filtro	981502
35	Kit scheda snubber Kit platine snubber Card kit snubber Karte kit snubber Kit tarjeta snubber	981503
36	Kit scheda controllo Kit fiche de controle Control pcb kit Kontrollekarte kit Kit tarjeta de controlo	981504
37	Kit assieme display Kit affichage Display kit Tafel kit Kit pantalla	981505
38	Kit retro Kit partie arriere Back panel kit Rueckseite kit Kit trasera	981506
39	Kit ripiano inferiore Kit plateau inferieur Lower shelf kit Unter regal kit Kit plano inferior	981507
40	Kit frontale + etichetta Kit partie frontal + etiquette Front panel kit + label Geraetefront kit + kleber Kit frontal + etiqueta	981508
41	Kit fianco dx Kit partie lateral droit Right side panel kit Rechtes seitenteil kit Kit lado derecho	981509
42	Kit fianco sx Kit partie lateral sx Left side panel kit Links seitenteil kit Kit lado izquierdo	981510
43	Trasformatore ausiliario Transformateur auxiliaire Auxiliary transformer Hilfstransformator Transformador auxiliar	990598
44	Kit ripiano superiore Kit plateau superieur Upper shelf kit Ober regal kit Kit plano superior	981665
45	Termostato Thermostat Thermal switch Thermostat Termostato	122571
46	Ass.Resistenza-condensatore Condensateur et resistance Capacitor-resistance Kondensator-widerstand Condensador-resistencia	123362
47	Collegamento dx Branchement dx Connection dx Anschluss dx Conexion dx	432955
48	Collegamento sx Branchement sx Connection sx Anschluss sx Conexion sx	432957

Schema elettrico, Schéma électrique, Diagram, Schaltplan, Esquema de conexiones.

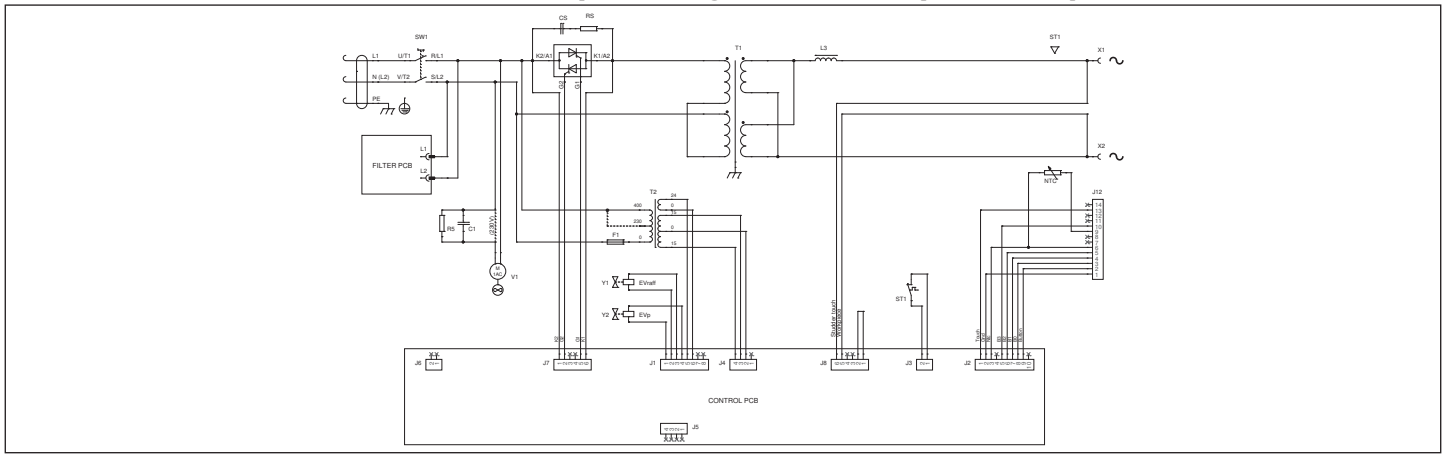

ELENCO PEZZI DI RICAMBIO
LISTE PIECES DETACHEES
SPARE PARTS LIST
ERSATZTEILLISTE
PIEZAS DE REPUESTO

SPOT WELDING PNEUMATIC CLAMP

TELWIN®

Esploso macchina, Dessin appareil, Machine drawing, Explosions Zeichnung des Geräts, Diseño seccionado maquina.

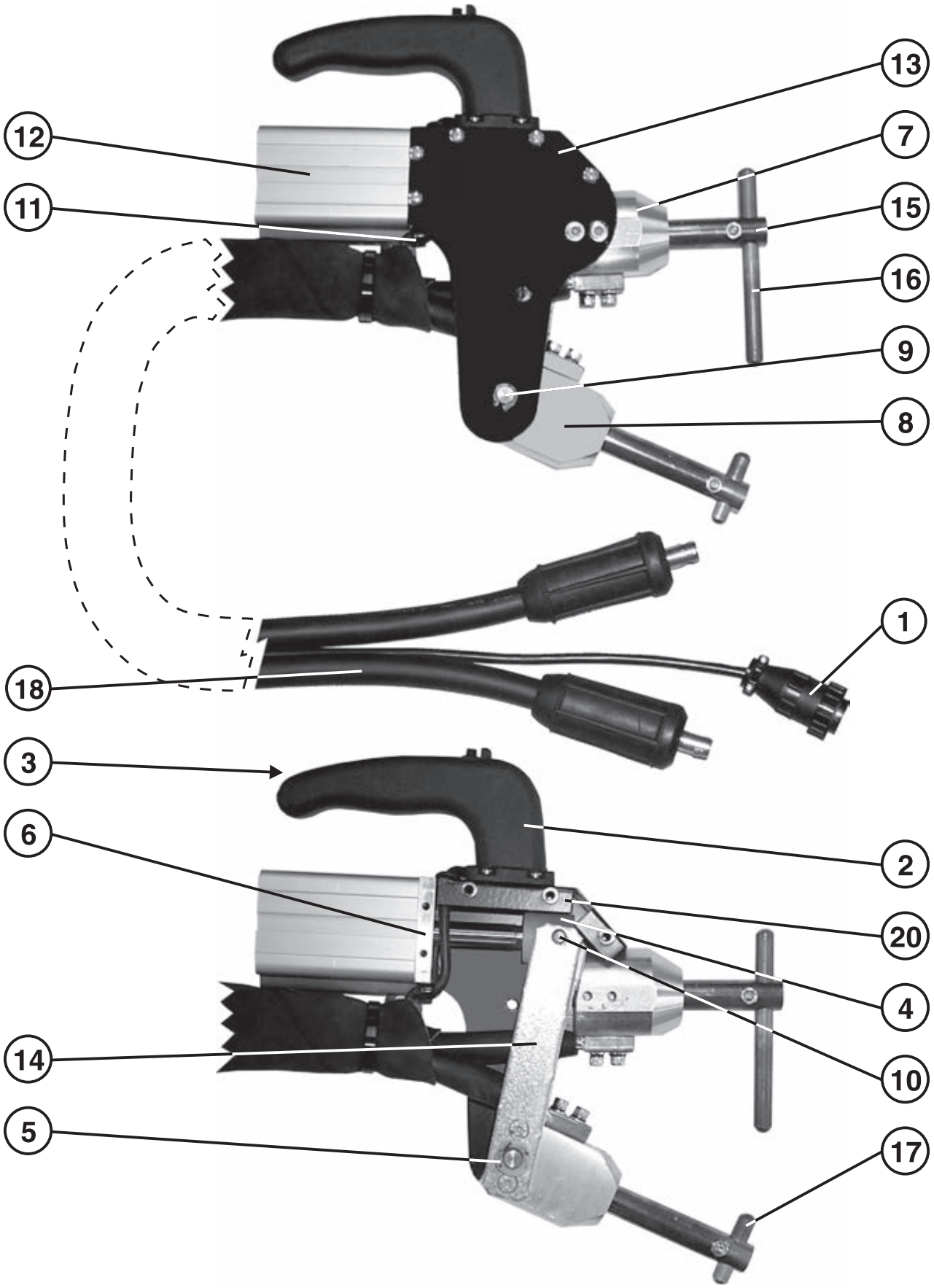

REF.	ELENCO PEZZI DI RICAMBIO PIECES DETACHEES SPARE PARTS LIST ERSATZTEILLISTE PIEZAS DE REPUESTO	CODICE CODE KODE
1	Cavo interruttore Cable interrupteur Switch cable Schalter kabel Cable interruptor	120558
2	Impugnatura dx pinza Poignee pour pince dx Knob for clamp right Griff fuer zange Empunadura por pinza	322576
3	Impugnatura sx pinza Poignee pour pince sx Knob for clamp left Griff fuer zange Empunadura por pinza	322577
4	Giunto Joint Coupling Kupplung Junta	322578
5	Boccola Douille Bush Buchse Casquillo	322579
6	Distanziale Entretoise Spacer Distanzstueck Espaciadores	432381
7	Portaelettrodo fisso Porte electrode fixe Fixed electrode holder Fester elektrodenhalter Sosten electrodo fijo	432382
8	Porta elettrodo mobile Porte electrode mobile Mobile electrode holder Beweblicher elektrodenhalter Sosten electrodo movil	432383
9	Perno Pivot Pin Zapfen Perno	483220
10	Perno Pivot Pin Zapfen Perno	483221
11	Fermacavo Bloque-cable Block cable Kabel block Cable bloqueo	483278
12	Cilindro d.50 Cilinder d.50 Cylinder d.50 Zylinder d.50 Cilindro d.50	602362
13	Piastra Plaque Plate Platte Plancha	644913
14	Leva Levier Lever Hebel Palanca	689016
15	Braccio portaelettrodo l=120mm Bras portelectrode l=120mm Electrode holder arm l=120mm Elektrodenhalter arm l=120mm Brazo portaelectrodo l=120mm	690005
16	Elettrodo dritto l=130mm d.12mm Electrode droit l=130mm d.12mm Straight electrode l=130mm d.12mm Gerade elektrode l=130mm d.12mm Electrodo recto l=130mm d.12mm	690047
17	Elettrodo dritto l=50mm d.12mm Electrode droit l=50mm d.12mm Straight electrode l=50mm d.12mm Gerade elektrode l=50mm d.12mm Electrodo recto l=50mm d.12mm	690050
18	Cavo 120 mmq 2 m connettore Cable 120 mmq 2 m connecteur Cable 120 mmq 2 m connector Kabel 120 mmq 2 m verbinder Cable 120 mmq 2 m conectador	713066
19	Xa1 bracci diritti l=120mm + elettrodi Xa1 bras droits l=120mm + electrodes Xa1 straight arms l=120mm + electrodes Xa1 gerade arme l=120mm + elektroden Xa1 brazos rectos l=120mm + electrodos	803151
20	Supporto maniglia Support poignèe Handle holder Griffhalterung Sosten manija	990771

REF.	ELENCO PEZZI DI RICAMBIO PIECES DETACHEES SPARE PARTS LIST ERSATZTEILLISTE PIEZAS DE REPUESTO	CODICE CODE KODE

REF.	ELENCO PEZZI DI RICAMBIO PIECES DETACHEES SPARE PARTS LIST ERSATZTEILLISTE PIEZAS DE REPUESTO	CODICE CODE KODE

ELENCO PEZZI DI RICAMBIO
LISTE PIECES DETACHEES
SPARE PARTS LIST
ERSATZTEILLISTE
PIEZAS DE REPUESTO

DIGITAL SPOTTER 9000 AQUA

TELWIN®

Esploso macchina, Dessin appareil, Machine drawing, Explosions Zeichnung des Geräts, Diseño seccionado maquina.

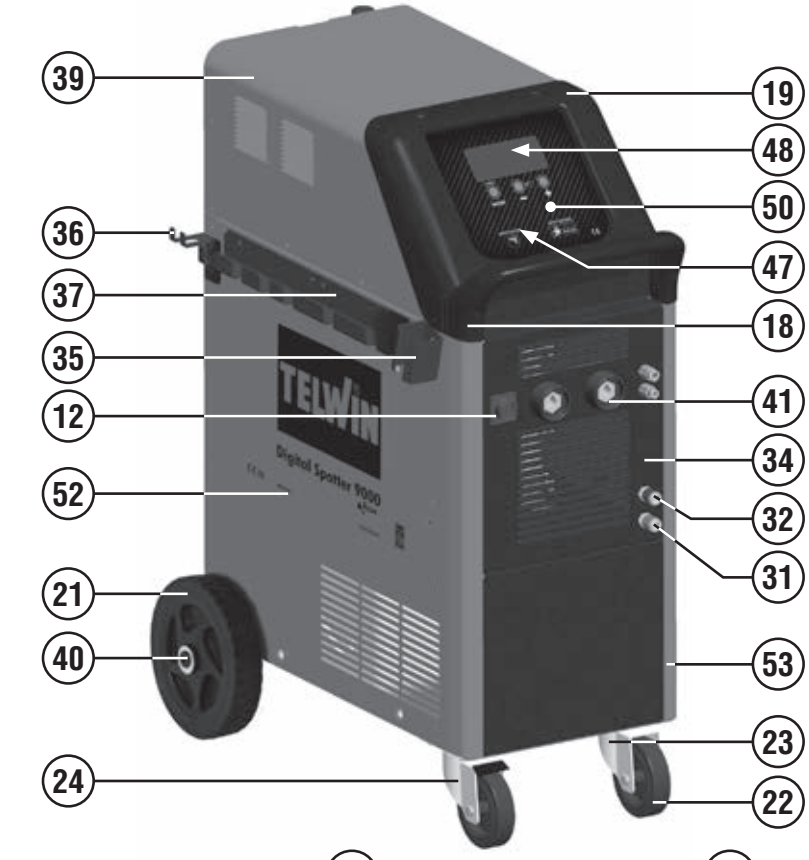

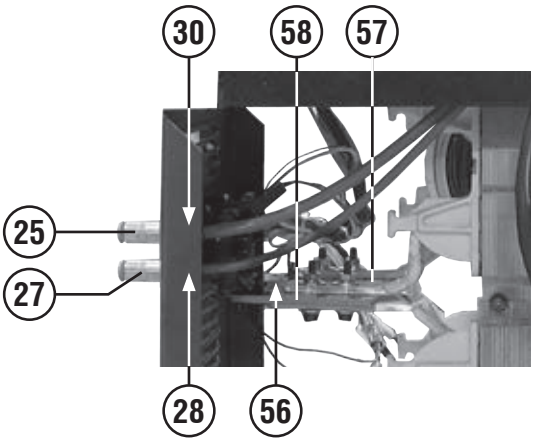

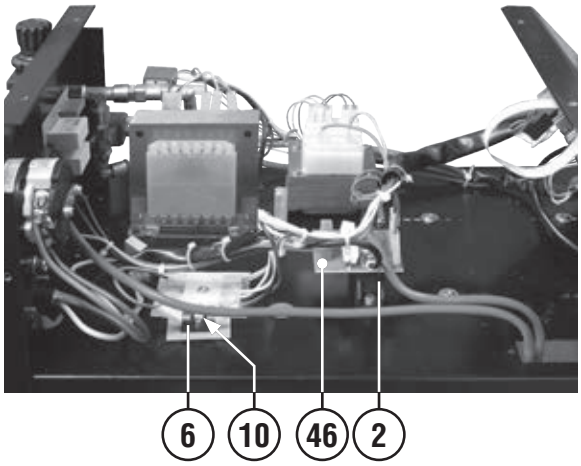

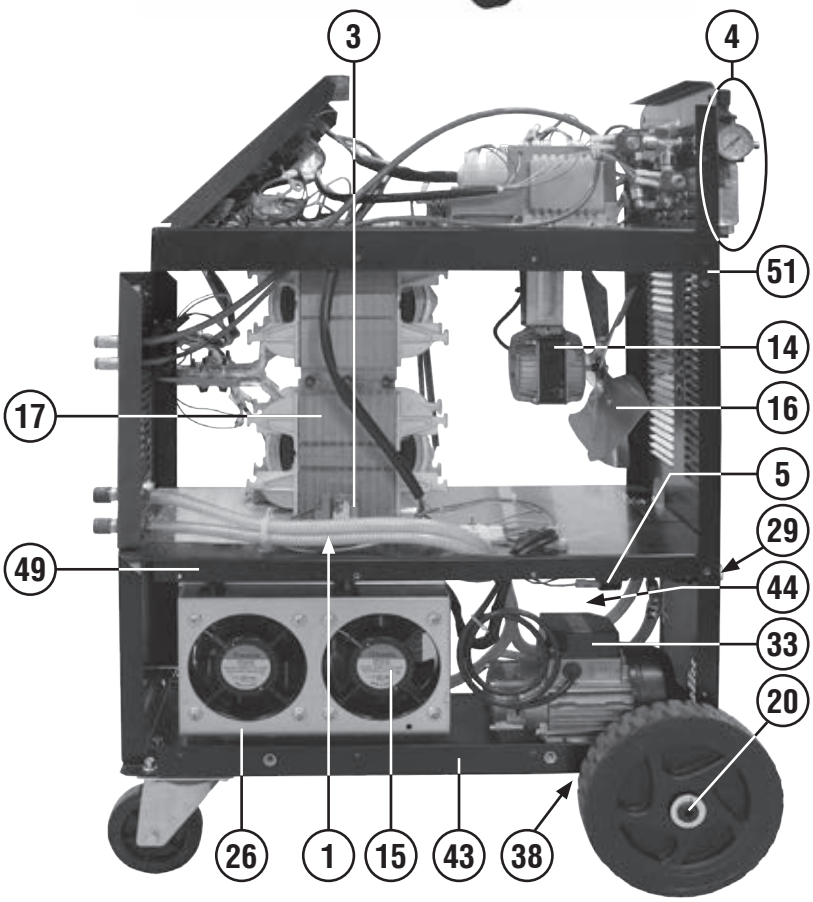

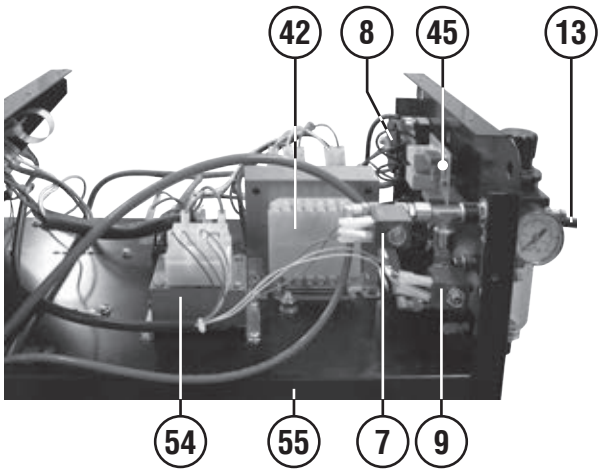

REF.	ELENCO PEZZI DI RICAMBIO PIECES DETACHEES SPARE PARTS LIST ERSATZTEILLISTE PIEZAS DE REPUESTO	CODICE CODE KODE
1	Base Base Basis Basis Base	112482
2	Scr Scr Scr Scr Scr	112692
3	Rele' Relais Relais Relais Relais	116154
4	Assieme riduttore + manometro Reducteur + manometer Gas regulator + manometer Druckminderer + manometer Reductor de presion + manometro	120036
5	Pressostato Pressostat Pressure switch Druckanzeige Presostato	121750
6	Portafusibile Porte fusible Fuse holder Sicherungshalter Porta fusible	122403
7	Elettrovalvola Electrovanne Electrovalve Elektroventil Electrovalvula	121801
8	Commutatore Commutateur Switch Schalter Conmutador	122531
9	Elettrovalvola Electrovanne Electro-valve Elektroventil Electrovalvola	122798
10	Fusibile Fusible Fuse Sicherung Fusible	122875
12	Cablaggio scheda/connettore Cable de platine/connecteur Card/connector cable Karte/verbinderkabel Cable de tarjeta/conectador	124727
13	Cavo alim. 3g4 4 m Cable alim. 3g4 4 m Mains cable 3g4 4 m Netzkabel 3g4 4 m Cable alim. 3g4 4 m	132101
14	Motore Moteur Motor Motor Motor	152083
15	Ventilatore Ventilateur Fan Ventilator Ventilador	152101
16	Ventola Helice Fan blade Fluegelrad Aventador	152113
17	Trasformatore 400v Transformateur 400v Transformer 400v Transformator 400v Transformador 400v	169826
18	Manico Poignee Handle Handgriff Manija	312328
19	Cornice Cadre Frame Rahmen Marco	321076
20	Tappo blocca ruote Bouchon ferme roue Wheel locking ring Radsperrestopfen Tapon de bloqueo rueda	322102
21	Ruota Roue Wheel Rad Rueda	321390
22	Ruota Roue Wheel Rad Rueda	322246
23	Supporto girevole Support tournant Swivel support Drehbarerhalter Sosten giratorio	422969
24	Supporto girevole + freno Support tournant + frein Swivel support + brake Drehbarerhalter + bremse Sosten giratorio + freno	484441
25	Attacco rapido Attelage rapide Quick connection Schnellanschluss Conexion rapida	602000
26	Radiatore Radiateur Radiator Kuehler Radiador	602038
27	Attacco rapido Attelage rapide Quick connection Schnellanschluss Conexion rapida	602116
28	Attacco rapido Attelage rapide Quick connection Schnellanschluss Conexion rapida	602137
29	Valvola Vanne Valve Ventil Valvula	602261
30	Attacco rapido Embout rapide Quick connection Anschluss Conexion	602276
31	Attacco rapido rosso Embout rapide rouge Quick connection red Schnellanschluss rot Enchufe roja	602296
32	Attacco rapido blu Embout rapide blue Quick connection blue Schnellanschluss blau Enchufe blue	602297
33	Elettropompa Pompe electrique Electric pump Elektropumpe Bomba electrica	602259
34	Kit frontale inferiore+ etichetta Kit partie frontal inferieur+etiquette Lower front panel + label kit Geraetefront unten + aufkleber kit Kit frontal inferior + etiqueta	981530
35	Staffa portapistola Bride suport pistolet Gunholder braket Pistolehalterbuegel Estribo sosten pistola	644457
36	Supporto estrattore Suport extracteur Extractor holder Extraktorhalterung Sosten extractor	644458
37	Staffa portaelettrodi Bride suportelectrode Electrodeholder bracket Elektrodenhalterbuegel Estribo sosten electrodo	644822
38	Staffa asse ruote Bride axe roues Wheels axle braket Radachsebuegel Estribo eje ruedas	645455
39	Mantello Capot Cover Deckel Panel de cobertura	651184
40	Asse per ruote Axe roues Wheel axle Radachse Eje ruedas	681152
41	Presa atlas 70/95mmq Prise atlas 70/95mmq Atlas socket 70/95mmq Atlas steckdose 70/95mmq Enchufe atlas 70/95mmq	712037
42	Autotrasfo 0-230-400v Autotrasfo 0-230-400v Autotrasfo 0-230-400v Autotrasfo 0-230-400v Autotrasfo 0-230-400v	980104
43	Kit fondo Kit chassis Bottom kit Bodenteil kit Kit fondo	981290
44	Kit serbatoio Kit reservoir Tank kit Tankkit Kit tanque	981324
45	Kit scheda filtro Kit platine filtre Filter card kit Filterkartekit Kit tarjeta filtro	981502
46	Kit scheda snubber Kit platine snubber Card kit snubber Karte kit snubber Kit tarjeta snubber	981503
47	Kit scheda controllo Kit fiche de controle Control pcb kit Kontrollekarte kit Kit tarjeta de controlo	981504
48	Kit assieme display Kit affichage Display kit Tafel kit Kit pantalla	981505
49	Kit ripiano inferiore Kit plateau inferieur Lower shelf kit Unter regal kit Kit plano inferior	981507
50	Kit frontale + etichetta Kit partie frontal + etiquette Front panel kit + label Geraetefront kit + kleber Kit frontal + etiqueta	981508
51	Kit retro Kit partie arriere Back panel kit Rueckseite kit Kit trasera	981511
52	Kit fianco dx Kit partie lateral droit Right side panel kit Rechtes seitenteil kit Kit lado derecho	981512

REF.	ELENCO PEZZI DI RICAMBIO PIECES DETACHEES SPARE PARTS LIST ERSATZTEILLISTE PIEZAS DE REPUESTO	CODICE CODE KODE
53	Kit fianco sx Kit partie lateral sx Left side panel kit Links seitenteil kit Kit lado izquierdo	981513
54	Trasformatore ausiliario Transformateur auxiliaire Auxiliary transformer Hilfstransformator Transformador auxiliar	990598
55	Kit ripiano superiore Kit plateau superieur Upper shelf kit Ober regal kit Kit plano superior	981665
56	Termostato Thermostat Thermal switch Thermostat Termostato	121415
57	Collegamento dx Branchement dx Connection dx Anschluss dx Conexion dx	432955
58	Collegamento sx Branchement sx Connection sx Anschluss sx Conexion sx	432957

REF.	ELENCO PEZZI DI RICAMBIO PIECES DETACHEES SPARE PARTS LIST ERSATZTEILLISTE PIEZAS DE REPUESTO	CODICE CODE KODE

REF.	ELENCO PEZZI DI RICAMBIO PIECES DETACHEES SPARE PARTS LIST ERSATZTEILLISTE PIEZAS DE REPUESTO	CODICE CODE KODE

Schema elettrico, Schéma électrique, Diagram, Schaltplan, Esquema de conexiones.

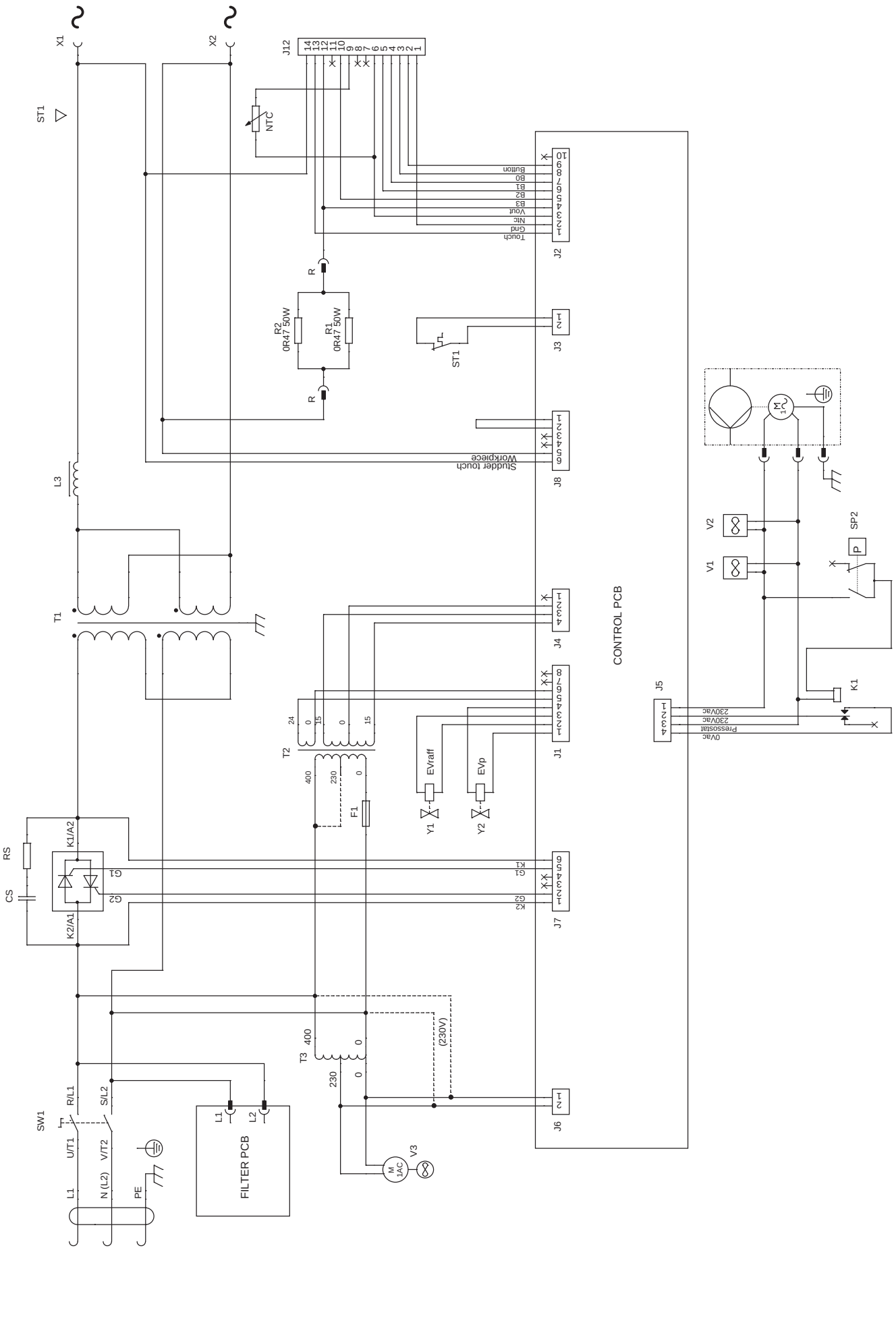

ELENCO PEZZI DI RICAMBIO
LISTE PIECES DETACHEES
SPARE PARTS LIST
ERSATZTEILLISTE
PIEZAS DE REPUESTO

PNEUMATIC CLAMP AQUA

TELWIN®

Esploso macchina, Dessin appareil, Machine drawing, Explosions Zeichnung des Geräts, Diseño seccionado maquina.

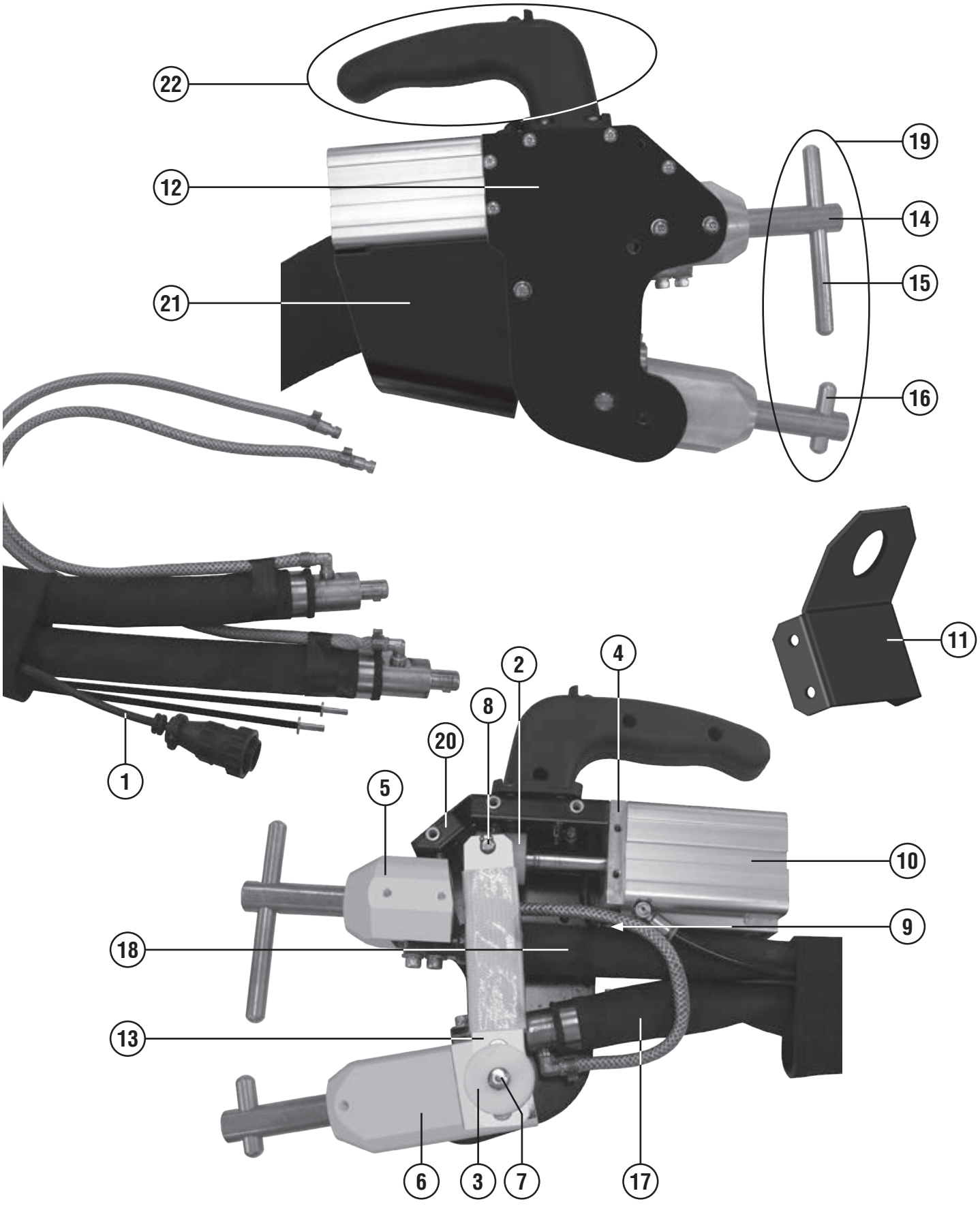

REF.	ELENCO PEZZI DI RICAMBIO PIECES DETACHEES SPARE PARTS LIST ERSATZTEILLISTE PIEZAS DE REPUESTO	CODICE CODE KODE
1	Cavo interruttore Cable interrupteur Switch cable Schalter kabel Cable interruptor	124725
2	Giunto Joint Coupling Kupplung Junta	322578
3	Boccola Douille Bush Buchse Casquillo	322806
4	Distanziale Entretoise Spacer Distanzstueck Espaciadores	432381
5	Portabraccio fisso Portebras fixe Fix armholder Bestaendiger armhalterung Portabrazo estable	432925
6	Portabraccio mobile Portebras mobile Adjustable armholder Beweglicher armhalterung Portabrazo regulable	432926
7	Perno Pivot Pin Zapfen Perno	483220
8	Perno Pivot Pin Zapfen Perno	483221
9	Fermacavo Bloque-cable Block cable Kabel block Cable bloqueo	483278
10	Cilindro d.50 Cilinder d.50 Cylinder d.50 Zylinder d.50 Cilindro d.50	602352
11	Staffa sollevamento Bride de soulevement Lifting racket Hebungsbuegel Estribo de alzamiento	645396
12	Piastra Plaque Plate Platte Plancha	645635
13	Leva Levier Lever Hebel Palanca	689016
14	Braccio portaelettrodo l=120mm Bras portelectrode l=120mm Electrode holder arm l=120mm Elektrodenhalter arm l=120mm Brazo portaelectrodo l=120mm	690005
15	Elettrodo dritto l=130mm d.12mm Electrode droit l=130mm d.12mm Straight electrode l=130mm d.12mm Gerade elektrode l=130mm d.12mm Electrodo recto l=130mm d.12mm	690047
16	Elettrodo dritto l=50mm d.12mm Electrode droit l=50mm d.12mm Straight electrode l=50mm d.12mm Gerade elektrode l=50mm d.12mm Electrodo recto l=50mm d.12mm	690050
17	Cavo pinza 1x150 l=2.00m Cable pince 1x150 l=2.00m Clamp cable 1x150 l=2.00m Zange kabel 1x150 l=2.00m Cable pinza 1x150 l=2.00m	713261
18	Cavo pinza 1x150 l=2.00m Cable pince 1x150 l=2.00m Clamp cable 1x150 l=2.00m Zange kabel 1x150 l=2.00m Cable pinza 1x150 l=2.00m	713264
19	Xa1 bracci diritti l=120mm + elettrodi Xa1 bras droits l=120mm + electrodes Xa1 straight arms l=120mm + electrodes Xa1 gerade arme l=120mm + elektroden Xa1 brazos rectos l=120mm + electrodos	803151
20	Kit supporto maniglia Kit support poignèe Handle holder kit Griffhalterung kit Kit sosten manija	980283
21	Kit staffa supporto cavi Kit bride support cables Cable holding bracket kit Kabelhalterungsbuegel kit Kit estribo sosten cables	981515
22	Kit impugnatura Kit poignee Handle kit Handgriff kit Kit empunadura	981516

ELENCO PEZZI DI RICAMBIO
LISTE PIECES DETACHEES
SPARE PARTS LIST
ERSATZTEILLISTE
PIEZAS DE REPUESTO

MANUAL SPOT WELDING CLAMP

TELWIN®

Esploso macchina, Dessin appareil, Machine drawing, Explosions Zeichnung des Geräts, Diseño seccionado maquina.

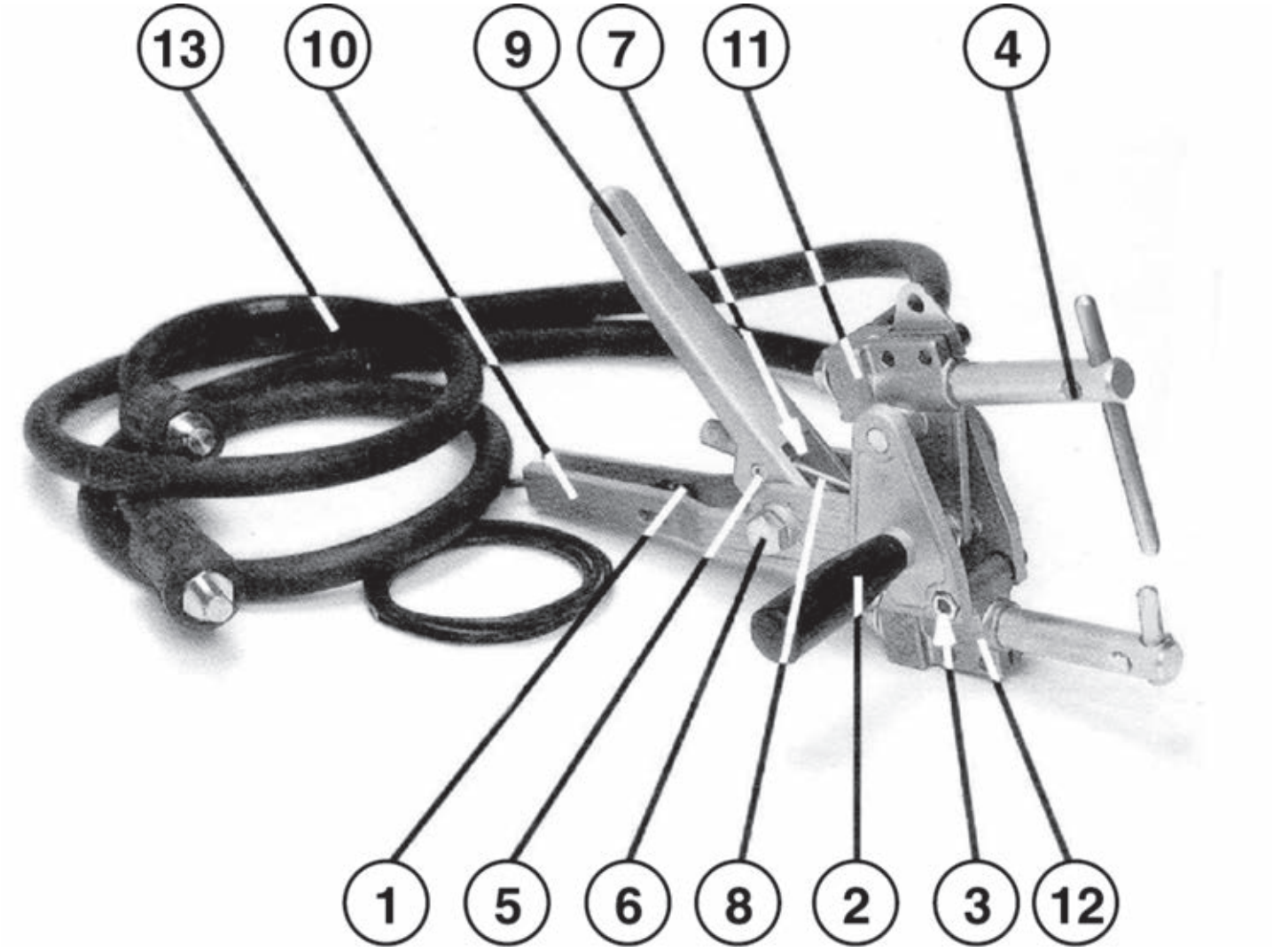

REF.	ELENCO PEZZI DI RICAMBIO PIECES DETACHEES SPARE PARTS LIST ERSATZTEILLISTE PIEZAS DE REPUESTO	CODICE CODE KODE
1	Microinterruttore Microinterrupteur Microswitch Microschalter Microinterruptor	122777
2	Manico con perno Poignee avec pivot Handle with pin Griff mit zapfen Manija con pernio	312161
3	Boccola isolante Douille isolante Insulating bush Isolierbuchse Bullon isolante	322080
4	Spina blocca elettrodo Fiche serre-electrode Electrode fixing plug Elektrodebefestigungstecker Enchufe bloque electrodo	422342
5	Vite Vis Screw Schraube Tornillo	422335
6	Vite leva Vis levier Lever screw Hebelschraube Tornillo por palanca	422348
7	Snodo pinza Joint pince Clamp hinge Scharnierzange Juego pinzas	422368

REF.	ELENCO PEZZI DI RICAMBIO PIECES DETACHEES SPARE PARTS LIST ERSATZTEILLISTE PIEZAS DE REPUESTO	CODICE CODE KODE
8	Vite regolazione Vis de reglage Regulation screw Regulationsschraube Tornillo de regulation	423298
9	Leva mobile Levier mobile Movable lever Hebel Palanca	685011
10	Leva Levier Lever Hebel Palanca	685010
11	Morsetto braccio superiore Borne bras superieur Upper arm clamp Oberenarmeklemme Bocadillo brazo superior	522041
12	Morsetto braccio inferiore Borne bras inferieur Lower arm clamp Unterarmklemme Bocadillo brazo inferior	522040
13	Cavo 150 mmq 2 m occhiello Cable 150 mmq 2 m oeillet Cable 150 mmq 2 m eyelet Kabel 150 mmq 2 m oese Cable 150 mmq 2 m ojal	713235

REF.	ELENCO PEZZI DI RICAMBIO PIECES DETACHEES SPARE PARTS LIST ERSATZTEILLISTE PIEZAS DE REPUESTO	CODICE CODE KODE

O P T I O N A L

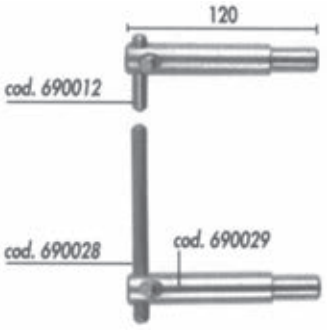

cod. 803015

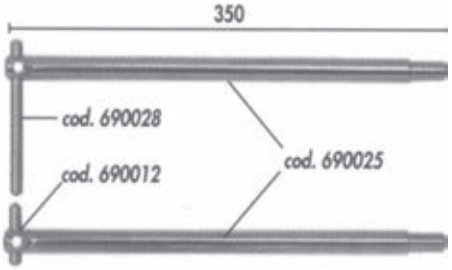

cod. 803017

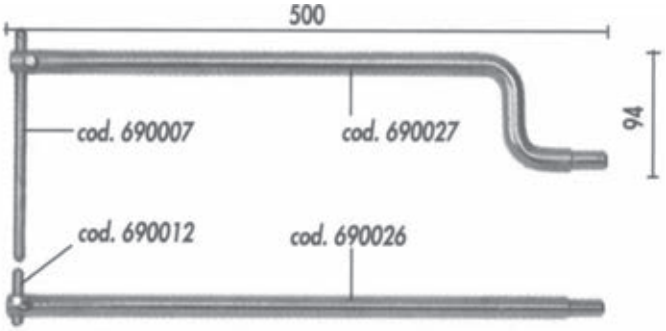

cod. 803024

ELENCO PEZZI DI RICAMBIO
LISTE PIECES DETACHEES
SPARE PARTS LIST
ERSATZTEILLISTE
PIEZAS DE REPUESTO

MANUAL CLAMP “C”

TELWIN®

Esploso macchina, Dessin appareil, Machine drawing, Explosions Zeichnung des Geräts, Diseño seccionado maquina.

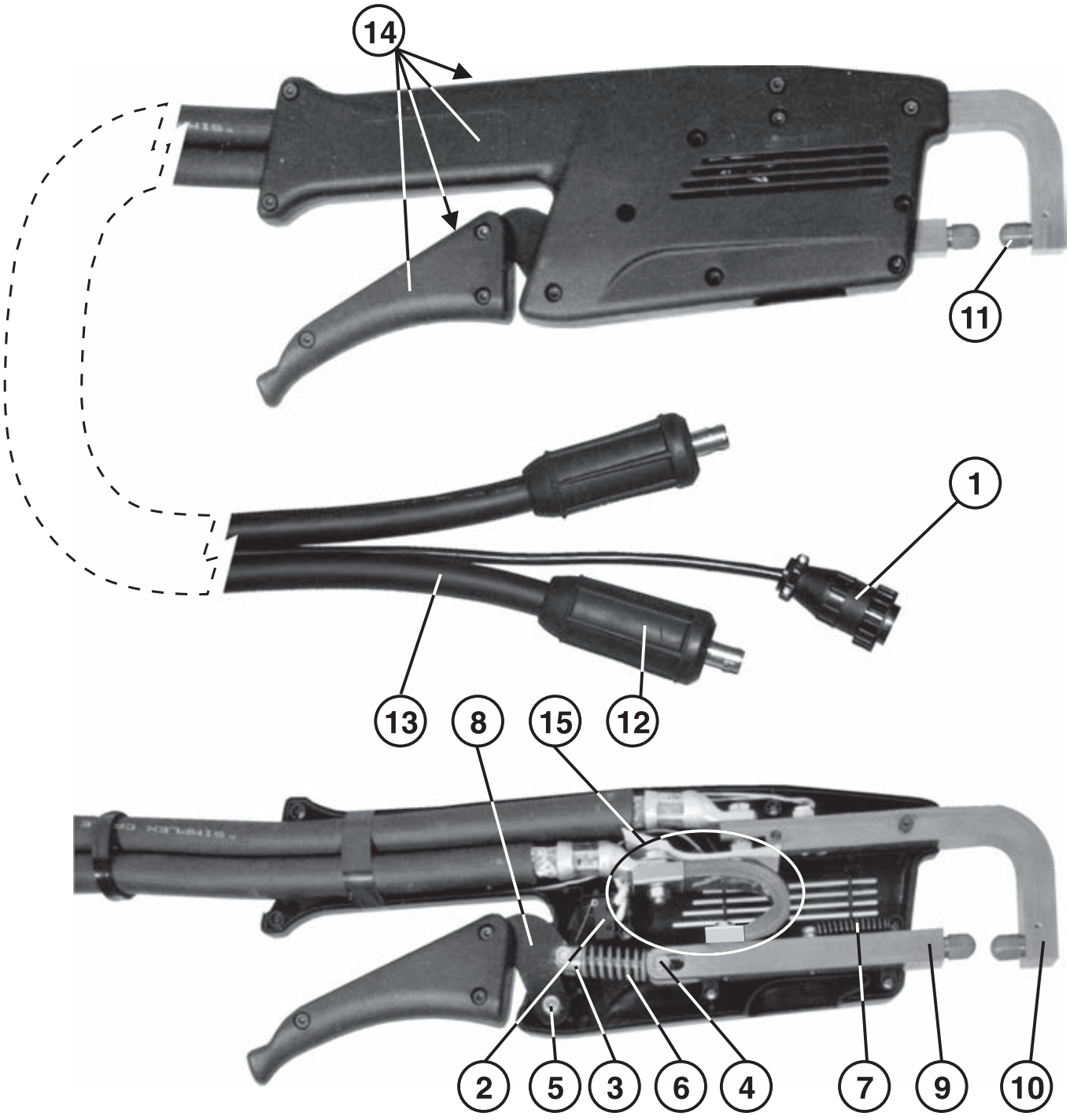

REF.	ELENCO PEZZI DI RICAMBIO PIECES DETACHEES SPARE PARTS LIST ERSATZTEILLISTE PIEZAS DE REPUESTO	CODICE CODE KODE
1	Connettore Connecteur Connector Anschluss Conectador	120089
2	Cablaggio connettore Cable connecteur Connector cable Anschlusskabel Cable conectador	120131
3	Giunto gancio-leva Joint crochet-levier Coupling hook-lever Kupplung haken-hebel Junta gancho-palanca	242032
4	Perno Goujon Pin Zapfen Perno	242033
5	Bronzina Palier Bearing Lager Casquillo	432284
6	Molla Ressort Spring Feder Muelle	452029
7	Molla Ressort Spring Feder Muelle	452031
8	Leva Levier Lever Hebel Palanca	482794
9	Braccio portaelettrodo inferiore Bras portelectrode inferieur Electrode holder lower arm Elektrodenhalter arm unten Brazo portaelectrodo inferiore	690053
10	Braccio portaelettrodo superiore Bras portelectrode superieur Electrode holder upper arm Elektrodenhalter arm oben Brazo portaelectrodo superiore	690054
11	Elettrodo pinza manuale a “c” Electrode pince manuelle “c” Electrode manual “c” gun Elektrode “c” zange mechanisch Electrodo pinza manual “c”	690055
12	Spina atlas 70mmq Fiche atlas 70mmq Atlas plug 70mmq Atlas stecker 70mmq Enchufe atlas 70mmq	712041
13	Cavo 95 mmq 1,85 m Cable 95 mmq 1,85 m Cable 95 mmq 1,85 m Kabel 95 mmq 1,85 m Cable 95 mmq 1,85 m	713019
14	“Kit guscio pinza a “”c”” “Kit coquille “”c”” pince” “Kit “”c”” clamp shell” “Kit “”c”” zange shale” “Kit casco pinza “”c””	990150
15	Elemento flessibile Partie flexible Flexible part Biegbarer teil Elemento flesible	990151

REF.	ELENCO PEZZI DI RICAMBIO PIECES DETACHEES SPARE PARTS LIST ERSATZTEILLISTE PIEZAS DE REPUESTO	CODICE CODE KODE

REF.	ELENCO PEZZI DI RICAMBIO PIECES DETACHEES SPARE PARTS LIST ERSATZTEILLISTE PIEZAS DE REPUESTO	CODICE CODE KODE

ELENCO PEZZI DI RICAMBIO
LISTE PIECES DETACHEES
SPARE PARTS LIST
ERSATZTEILLISTE
PIEZAS DE REPUESTO

INVERSPOTTER 13500 SMART AQUA

TELWIN

Esploso macchina, Dessin appareil, Machine drawing, Explosions Zeichnung des Geräts, Diseño seccionado maquina.

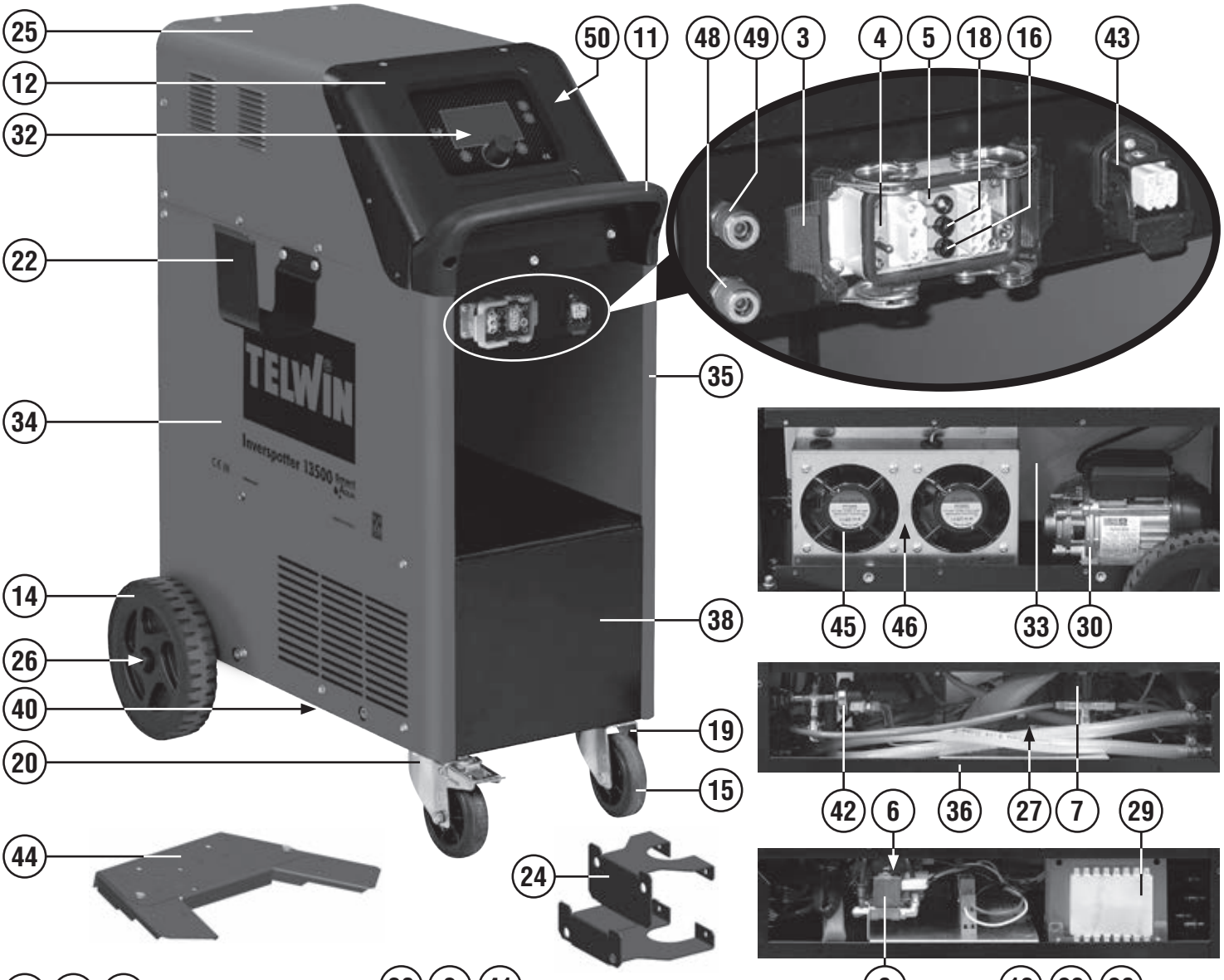

REF.	ELENCO PEZZI DI RICAMBIO PIECES DETACHEES SPARE PARTS LIST ERSATZTEILLISTE PIEZAS DE REPUESTO	CODICE CODE KODE
1	Assieme riduttore + manometro Reducteur + manometer Gas regulator + manometer Druckminderer + manometer Reductor de presion + manometro	120036
2	Commutatore Commutateur Switch Schalter Conmutador	121265
3	Custodia presa fissa Etui prise fixe Fix socket case Fixe steckdose gehaeuse Custodia enchufe fija	121331
4	Telaio Cadre Frame Rahmen Marco	121332
5	Modulo pneumatico 3 poli Module pneumatique 3 pin 3 Pin pneumatic module Pneumatisches modul 3 pin Modulo neumatico 3 pin	121337
6	Elettrovalvola Electrovanne Electrovalve Elektroventil Electrovalvula	121431
7	Pressostato Pressostat Pressure switch Druckanzeige Presostato	122599
8	Elettrovalvola Electrovanne Electrovalve Elektroventil Electrovalvula	121800
9	Cavo alim. 4g06.00 L=03.00 Cable alim. 4g06.00 L=03.00 Mains cable 4g06.00 L=03.00 Netzkabel 4g06.00 L=03.00 Cable alim. 4g06.00 L=03.00	132366
10	Pressacavo Presse cable Cable bushing Kabelhalter Prensa cable	312068
11	Manico Poignee Handle Handgriff Manija	312328
12	Cornice Cadre Frame Rahmen Marco	321297
13	Kit scheda tft Kit platine tft Tft card kit Tft karte kit Kit tarjeta tft	982032
14	Ruota Roue Wheel Rad Rueda	321390
15	Ruota Roue Wheel Rad Rueda	322246
16	Raccordo portatubo femmina Raccord supporttuyau femelle Female pipeholding connection Weiblichrohrhalterung verbindung Racordo sosten tubo femina	322867
17	Kit scheda controllo Kit carte controle Control board kit Steuerungskarte kit Kit tarjeta control	982056
18	Raccordo portatubo femmina Raccord supporttuyau femelle Female pipeholding connection Weiblichrohrhalterung verbindung Racordo sosten tubo femina	322953
19	Supporto girevole Support tournant Swivel support Drehbarerhalter Sosten giratorio	422969
20	Supporto girevole + freno Support tournant + frein Swivel support + brake Drehbarerhalter + bremse Sosten giratorio + freno	484441
21	Supporto inferiore Suport inferieur Lower holder Unten halterung Soporte inferior	645654
22	Staffa appendi cavo Etrier cable Cable holding bracket Kabel tragbuegel Apoyo cabel	645469
23	Kit frontale Kit partie frontal Front panel kit Gerätefront kit Kit frontal	982152
24	Supporto bracci Support bras Arm support Arme halterung Sosten brazos	645578
25	Mantello Capot Cover Deckel Panel de cobertura	651184
26	Asse per ruote Axe roues Wheel axle Radachse Eje ruedas	681073
27	Kit elettrovalvola Kit electrovanne Electro-valve kit Elektroventil kit Kit electrovalvola	980106
28	Kit manopola encoder d.29 Kit poignee encoder d.29 Encoder knob kit d.29 Encodergriff kit d.29 Kit manija encoder d.29	980968
29	Autotrasfo 0-230-400v Autotrasfo 0-230-400v Autotrasfo 0-230-400v Autotrasfo 0-230-400v Autotrasfo 0-230-400v	980104
30	Elettropompa Pompe electrique Electric pump Elektropump Bomba electrica	602259
31	Kit scheda primario Kit fiche primaire Primary pcb kit Primaertrafokarte kit Kit tarjeta primario	982033
32	Schermo Blindage Shield Schild Proteccion	645572
33	Kit serbatoio Kit reservoir Tank kit Tankkit Kit tanque	981324
34	Kit fianco dx Kit partie lateral droit Right side panel kit Rechtes seitenteil kit Kit lado derecho	981317
35	Kit fianco sx Kit partie lateral sx Left side panel kit Links seitenteil kit Kit lado izquierdo	981318
36	Kit supporto pinza Kit support pince Clamp holder kit Zangehalterung kit Kit sosten pinza	981286
37	Ripiano superiore Etagere superieur Upper shelf Oberstes regal Estante superior	645855
38	Kit ripiano inferiore Kit plateau inferieur Lower shelf kit Unter regal kit Kit plano inferior	981288
39	Kit retro Kit partie arriere Back panel kit Rückseite kit Kit trasera	982035
40	Kit fondo Kit chassis Bottom kit Bodenteil kit Kit fondo	981290
41	Kit scheda filtro ingresso Kit platine filtre input Input filter card kit Input filterkarte kit Kit tarjeta filtro input	990287
42	Pressostato Pressostat Pressure switch Druckanzeige Presostato	121750
43	Custodia Garde Guard Schutz Proteccion	121566
44	Kit supporto ruote anteriore Kit suport roues Wheels holder kit Raedernhalterung kit Kit sosten ruedas	981315
45	Ventilatore Ventilateur Fan Ventilator Ventilador	152101
46	Radiatore Radiateur Radiator Kuehler Radiador	602038
47	Valvola Vanne Valve Ventil Valvula	602261
48	Attacco rapido rosso Embout rapide rouge Quick connection red Schnellanschluss rot Enchufe roja	602296
49	Attacco rapido blu Embout rapide blue Quick connection blue Schnellanschluss blau Enchufe blue	602297
50	Staffa scheda wi-fi Bride platine wi-fi Wi-fi card holder Wi-fi kartehalterung Apoyo tarjeta wi-fi	645912

Schema elettrico, Schéma électrique, Diagram, Schaltplan, Esquema de conexiones.

SPOT WELDING

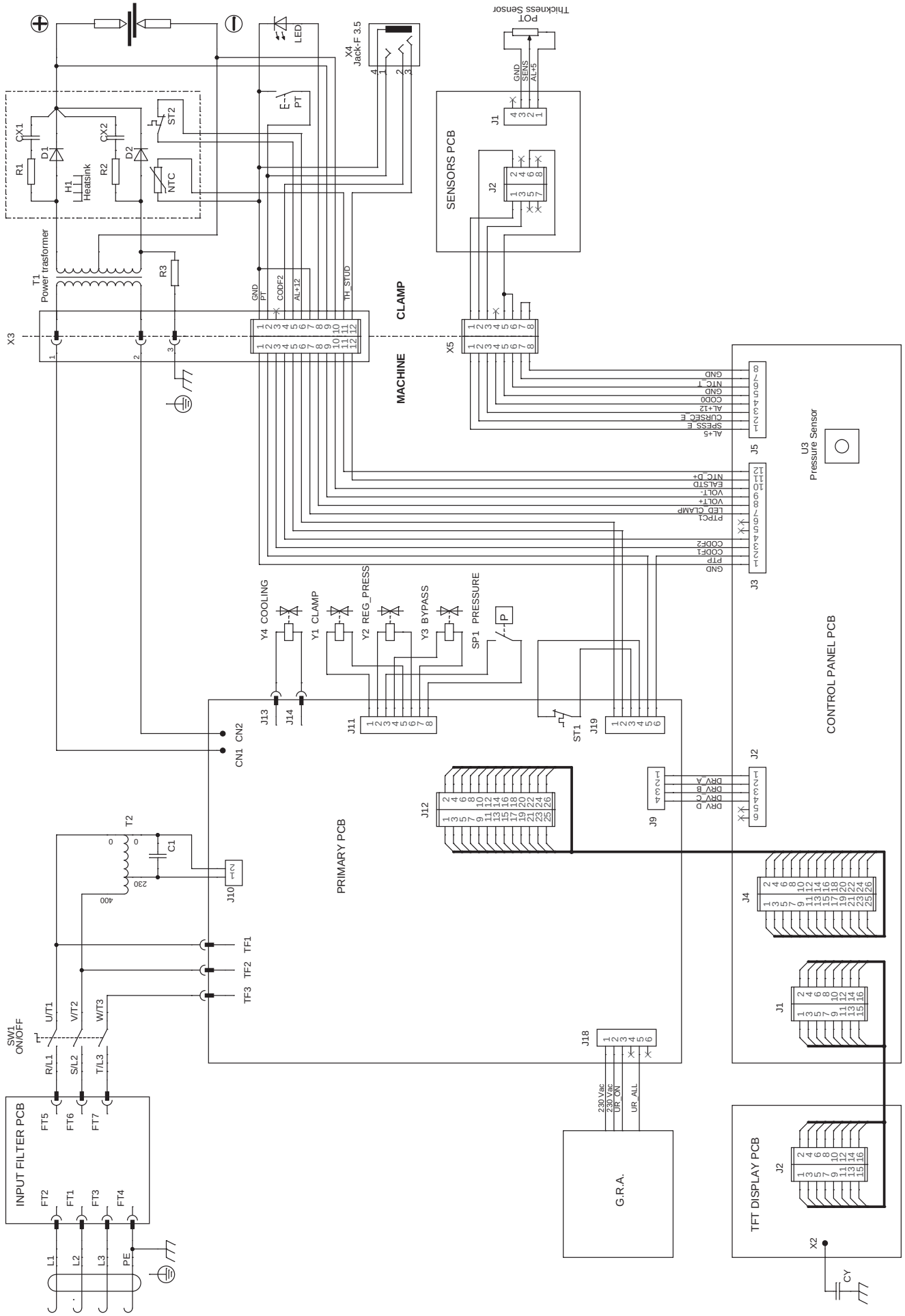

Schema elettrico, Schéma électrique, Diagram, Schaltplan, Esquema de conexiones.

G.R.A. WATER COOLING SYSTEMS

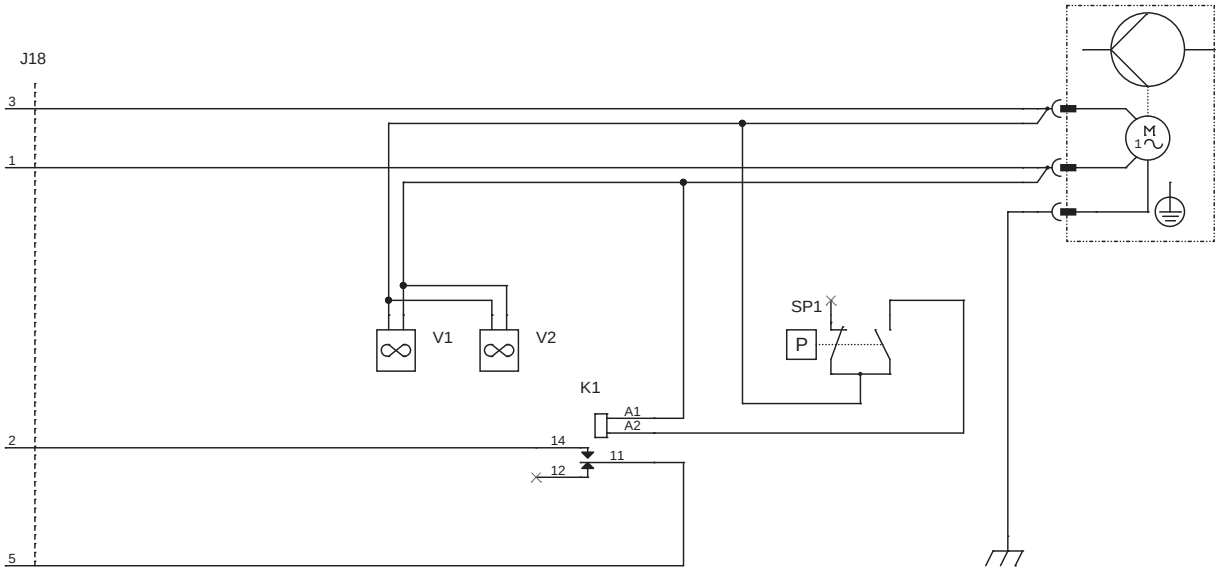

PNEUMATIC

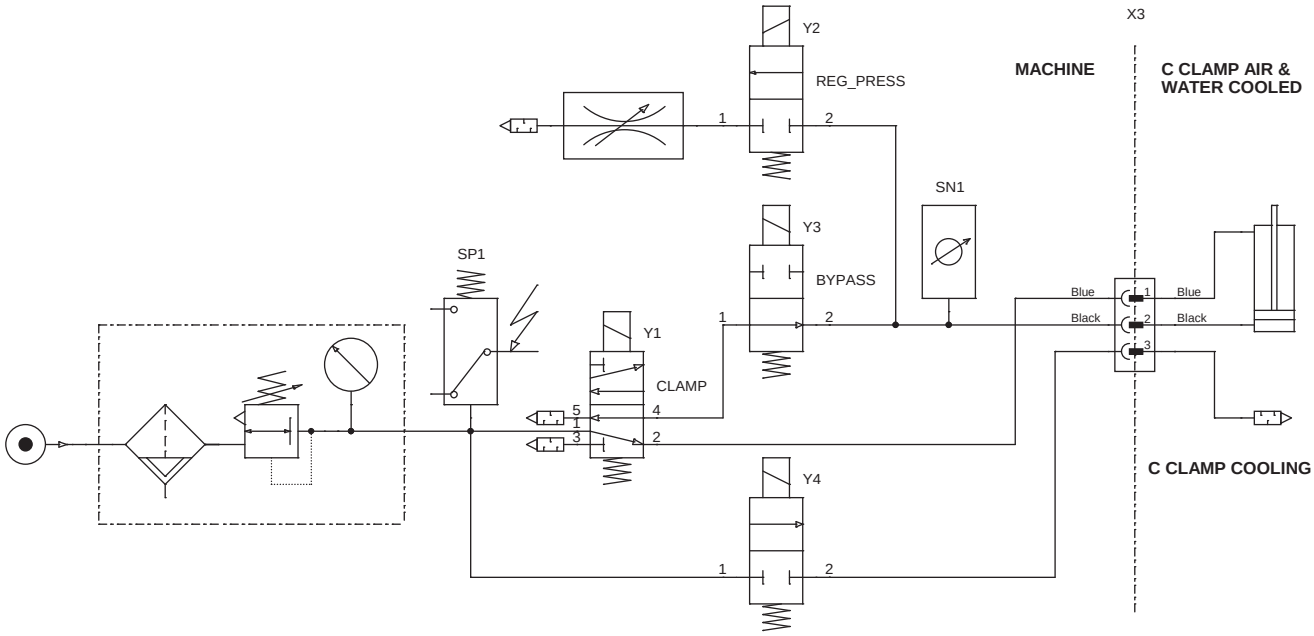

ELENCO PEZZI DI RICAMBIO
LISTE PIECES DETACHEES
SPARE PARTS LIST
ERSATZTEILLISTE
PIEZAS DE REPUESTO

PNEUMATIC SPOT WELDING CLAMP “C” AQUA

TELWIN®

Esploso macchina, Dessin appareil, Machine drawing, Explosions Zeichnung des Geräts, Diseño seccionado maquina.

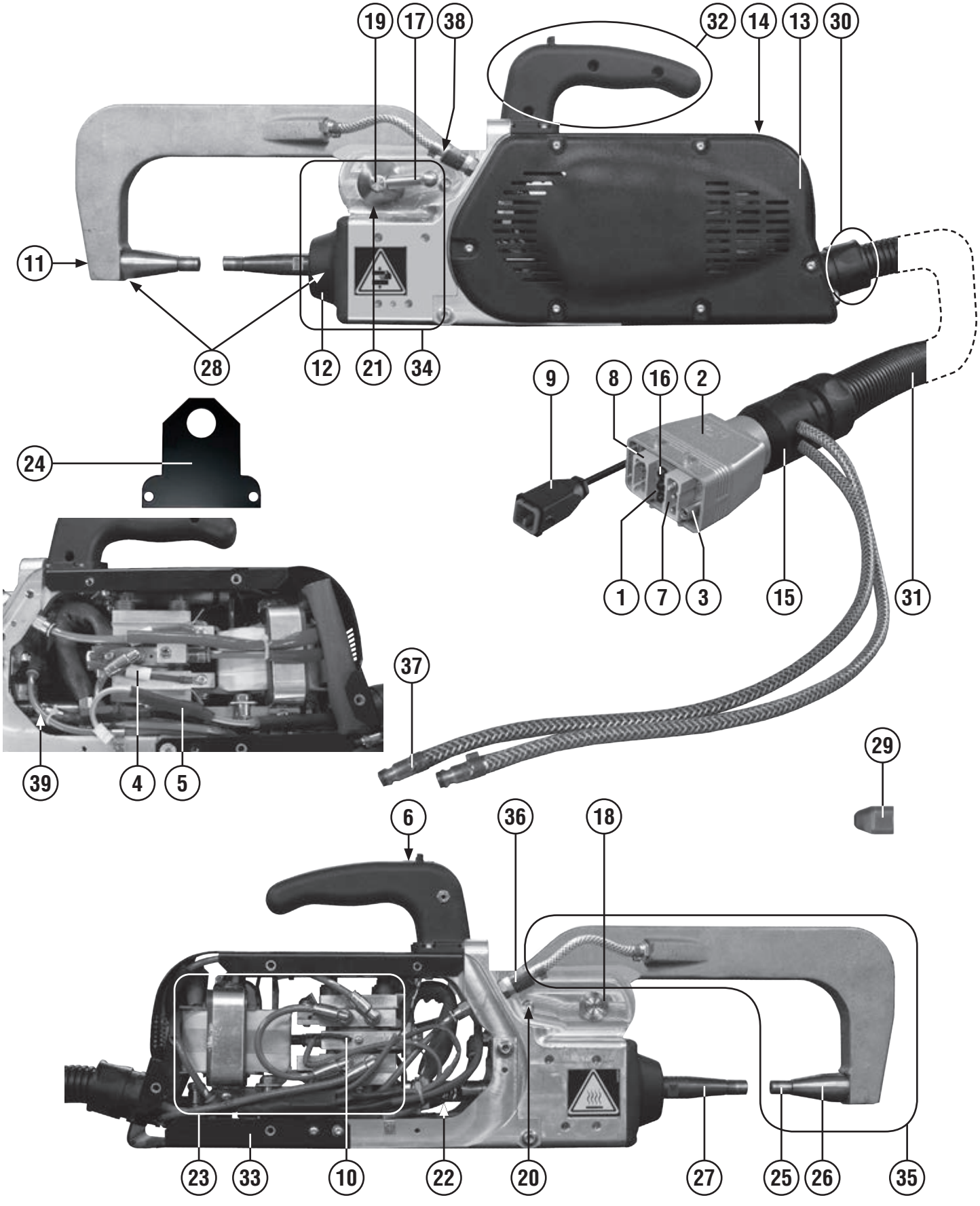

REF.	ELENCO PEZZI DI RICAMBIO PIECES DETACHEES SPARE PARTS LIST ERSATZTEILLISTE PIEZAS DE REPUESTO	CODICE CODE KODE
1	Modulo pneumatico 3 poli Module pneumatique 3 pin 3 Pin pneumatic module Pneumatisches modul 3 pin Modulo neumatico 3 pin	121337
2	Kit custodia presa volante Kit etui prise mobile Mobile socket case kit Bewegliche steckdose gehäuse kit Kit custodia enchufe movil	982511
3	Telaio Cadre Frame Rahmen Marco	121345
4	Ass.Snubber Set snubber Set snubber Set snubber Set snubber	124704
5	Cablaggio Cablage Wire set Kabelsatz Cables	124300
6	Cavo interruttore Cable interrupteur Switch cable Schalter kabel Cable interruptor	124591
7	Cablaggio i° presa volante Cable i° prix mobile Mobile socket i°cable Beweglicher steckdose i°kabel Cable i° enchufe movil	124593
8	Cablaggio II° presa volante Cable II° prix mobile Mobile socket II°cable Beweglicher steckdose II°kabel Cable II° enchufe movil	124599
9	Cablaggio - riconoscimento automatico Cablage - reconnaissance automatique Wire set - automatic recognition Kabelsatz - automatische erkennung Cables - reconocimiento automático	124595
10	Ass.Ntc + termostato Set ntc + thermostat Set ntc + thermostat Set ntc + thermostat Set ntc + termostato	124625
11	Vite Vis Screw Schraube Vis	212478
12	Supporto anteriore antirotazione Support frontal anti rotation Front support anti-rotation Anti-rotation front behalter Apoyo frente antirotacion	321080
13	Fianco sinistro Partie lateral gauche Left side panel Links seitenblech Flanco isquierdo	321098
14	Fianco destro Partie lateral droite Right side panel Rechts seitenblech Flanco derecho	321099
15	Giunto cavi Joint cables Cables joint Kabel kupplung Junto cables	321100
16	Raccordo portatubo maschio Raccord supporttuyau male Male pipeholding connection Maennlichrohrhalterung verbindung Racordo sosten tubo macho	322871
17	Leva Levier Lever Hebel Palanca	432682
18	Boccola filettata Douille filetee Threaded bush Gewindebuchse Casquillo filetado	484104
19	Volantino Volant Handwheel Regelungshandrad Volante	484105
20	Perno Pivot Pin Zapfen Perno	484106
21	Boccola Douille Bush Buchse Casquillo	484444

REF.	ELENCO PEZZI DI RICAMBIO PIECES DETACHEES SPARE PARTS LIST ERSATZTEILLISTE PIEZAS DE REPUESTO	CODICE CODE KODE
22	Attacco rapido Attelage rapide Quick connection Schnellanschluss Conexion rapida	602318
23	Kit trasformatore + raddrizzatore Kit trasformateur + redresseur Transformer kit + rectifier Trafokit + gleichrichter Kit transformador + rectificador	981304
24	Golfaro Anneau d'ancrage Ring Ringmutter Anillo	645576
25	Cap "a" ø13 ca l=18mm Cap "a" ø13 ca l=18mm Cap "a" ø13 ca l=18mm Cap "a" ø13 ca l=18mm Cap "a" ø13 ca l=18mm	690130
26	Portaelettrodo fisso Porte electrode fixe Fixed electrode holder Fester elektrodenhalter Sosten electrodo fijo	690134
27	Portaelettrodo mobile Porte electrode moblie Mobile electrode holder Bewechlicher elektrodenhalter Sosten electrodo movil	690135
28	Anello or Bague Or-ring Or-ring Anillo or	742512
29	Cap "b" tondo ca l=18mm Cap "b" ronde ca l=18mm Cap "b" round ca l=18mm Cap "b" runde ca l=18mm Cap "b" rondo ca l=18mm	690132
30	Kit raccordo portatubo Kit raccord Connector kit Verbindungskit Kit racor	980980
31	Kit tubo corrugato m.5 Kit tube annelé m.5 Corrugated tube kit m.5 Wellrohrkit m.5 Kit tubo corrugado m.5	981110
32	Kit impugnatura Kit poignee Handle kit Handgriff kit Kit empunadura	981260
33	Kit staffa di protezione Kit bride de protection Protection bracket kit Schuztungsbuegel kit Kit estribo de proteccion	981321
34	Kit cilindro Kit cilinder Cylinder kit Zylinder kit Kit cilindro	981322
35	Kit assieme braccio Set bras Arm set Arm set Set brazo	981033
36	Attacco rapido Attelage rapide Quick connection Schnellanschluss Conexion rapida	602340
37	Riduzione innesti rapidi Reducteur embout rapide Quick connection reduction Schnellkupplungsadapter Reduccion inyertos rapidos	742513
38	Innesto rapido Embrayage rapide Quick connection Schnellkupplung Connecion rapida	742597
39	Scheda Platine Card Karte Tarjeta	117097

REF.	ELENCO PEZZI DI RICAMBIO PIECES DETACHEES SPARE PARTS LIST ERSATZTEILLISTE PIEZAS DE REPUESTO	CODICE CODE KODE

ELENCO PEZZI DI RICAMBIO
LISTE PIECES DETACHEES
SPARE PARTS LIST
ERSATZTEILLISTE
PIEZAS DE REPUESTO

INVERSPOTTER14000 SMART AQUA

Esploso macchina, Dessin appareil, Machine drawing, Explosions Zeichnung des Geräts, Diseño seccionado maquina.

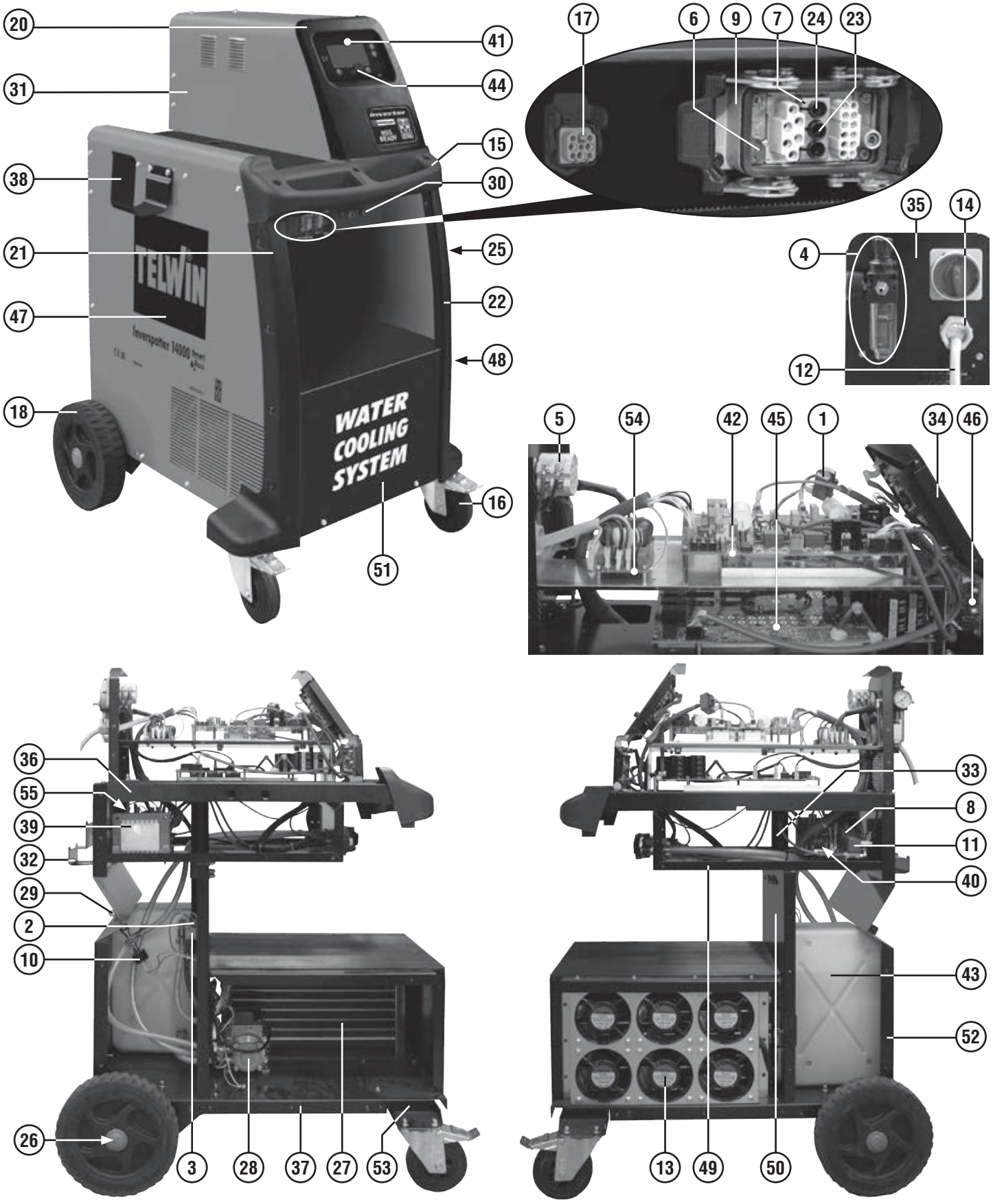

REF.	ELENCO PEZZI DI RICAMBIO PIECES DETACHEES SPARE PARTS LIST ERSATZTEILLISTE PIEZAS DE REPUESTO	CODICE CODE KODE
1	Sensore di hall Sensor hall Hall sensor Hall sensor Sensor de hall	112381
2	Base Base Basis Basis Base	112482
3	Rele' Relais Relais Relais Relais	116154
4	Assieme riduttore + manometro Reducteur + manometer Gas regulator + manometer Druckminderer + manometer Reductor de presion + manometro	120036
5	Commutatore Commutateur Switch Schalter Conmutador	121265
6	Telaio Cadre Frame Rahmen Marco	121332
7	Modulo pneumatico 3 poli Module pneumatique 3 pin 3 Pin pneumatic module Pneumatisches modul 3 pin Modulo neumatico 3 pin	121337
8	Elettrovalvola Electrovanne Electrovalve Elektroventil Electrovalvula	121431
9	Custodia presa fissa Etui prise fixe Fix socket case Fixe steckdose gehaeuse Custodia enchufe fija	121331
10	Pressostato Pressostat Pressure switch Druckanzeige Presostato	121750
11	Elettrovalvola Electrovanne Electrovalve Elektroventil Electrovalvula	121800
12	Cavo alim. Fror 4g06.00 0.8 M Cable alim. Fror 4g06.00 0.8 M Mains cable fror 4g06.00 0.8 M Netzkabel fror 4g06.00 0.8 M Cable alim. Fror 4g06.00 0.8 M	132378
13	Ventilatore Ventilateur Fan Ventilator Ventilador	152101
14	Kit pressacavo Kit presse cable Cable bushing kit Kabeldurchgang kit Kit prensa cable	990368
15	Assieme manico Set poignee Handle set Handgriff set Set manija	312428
16	Ruota.Girevole + freno Roue tournante + frein Swivel wheel + brake Bewegliches rad + bremse Rueda giratoria + freno	322569
17	Cablaggio Cablage Wire set Kabelsatz Cables	125092
18	Ruota Roue Wheel Rad Rueda	321389
20	Cornice Cadre Frame Rahmen Marco	321269
21	Profilo destro Profil droit Right profile Richtige profil Perfil derecho	322926
22	Profilo sinistro Profil gauche Left profile Linke profil Perfil isquierdo	322927

REF.	ELENCO PEZZI DI RICAMBIO PIECES DETACHEES SPARE PARTS LIST ERSATZTEILLISTE PIEZAS DE REPUESTO	CODICE CODE KODE
23	Raccordo portatubo femmina Raccord supporttuyau femelle Female pipeholding connection Weiblichrohrhalterung verbindung Racordo sosten tubo femina	322953
24	Raccordo portatubo femmina Raccord supporttuyau femelle Female pipeholding connection Weiblichrohrhalterung verbindung Racordo sosten tubo femina	322867
25	Supporto pinza carrello Support chariot pour pince Trolley clamp support Wagen zangehalterung Soporte carrito por pinca	432553
26	Asse per ruote Axe roues Wheels axle Radachse Eje ruedas	483060
27	Radiatore Radiateur Radiator Radator Radiador	602268
28	Elettropompa Pompe electrique Electric pump Elektropump Bomba electrica	602259
29	Valvola Vanne Valve Ventil Valvula	602261
30	Attacco rapido Attelage rapide Quick connection Schnellanschluss Conexion rapida	602340
31	Mantello Capot Cover Deckel Panel de cobertura	651150
32	Supporto bracci Support bras Arm holder Armen halterung Sosten brazos	645458
33	Supporto inferiore Suport inferieur Lower holder Unten halterung Soporte inferior	645654
34	Frontale Partie frontal Front panel Gerätefront Frontal	645813
35	Retro Partie arriere Back panel Rückseite Trasera	645814
36	Kit mantello Kit capot Cover kit Deckel kit Kit panel de cobertura	981950
37	Ass. Fondo Set chassis Bottom set Bodenteil set Set fondo	645591
38	Staffa appendi cavo Etrier cable Cable holding bracket Kabel tragbuegel Apoyo cabel	645469
39	Autotrasfo 0-230-400v Autotrasfo 0-230-400v Autotrasfo 0-230-400v Autotrasfo 0-230-400v Autotrasfo 0-230-400v	980104
40	Kit elettrovalvola Kit electrovanne Electro-valve kit Elektroventil kit Kit electrovalvola	980106
41	Kit assieme pannello-scheda Kit frontal + platine Tft card kit Gerätefront + karte kit Kit frontal + tarjeta	981953
42	Kit scheda inverter Kit fiche inverter Inverter card kit Inverter karte kit Kit tarjeta inverter	981954
43	Kit serbatoio Kit reservoir Tank kit Tankkit Kit tanque	980967

REF.	ELENCO PEZZI DI RICAMBIO PIECES DETACHEES SPARE PARTS LIST ERSATZTEILLISTE PIEZAS DE REPUESTO	CODICE CODE KODE
44	Kit manopola encoder d.29 Kit poignee encoder d.29 Encoder knob kit d.29 Encodergriff kit d.29 Kit manija encoder d.29	980968
45	Kit scheda raddrizzatore Kit fiche redresseur Rectifier board kit Gleichrichter karte kit Kit tarjeta rectificador	981955
46	Kit scheda controllo Kit carte controle Control board kit Steuerungskarte kit Kit tarjeta control	981952
47	Kit fianco dx Kit partie lateral droit Right side panel kit Rechtes seitenteil kit Kit lado derecho	981353
48	Kit fianco sx Kit partie lateral sx Left side panel kit Links seitenteil kit Kit lado izquierdo	981354
49	Kit supporto pinza Kit support pince Clamp holder kit Zangehalterung kit Kit sosten pinza	981355
50	Kit diaframma Kit diaphragme Diaphragm kit Diaphragma kit Kit diafragma	980974
51	Kit frontale gra Kit partie frontal gra Gra front panel kit Gra geraetefront kit Kit frontal gra	981356
52	Kit retro Kit partie arriere Back panel kit Rückseite kit Kit trasera	981951
53	Kit supporto ruote Kit suport roues Wheels holder kit Raedernhalterung kit Kit sosten ruedas	980978
54	Kit scheda filtro ingresso Kit platine filtre input Input filter card kit Input filterkarte kit Kit tarjeta filtro input	990287
55	Pressostato Pressostat Pressure switch Druckanzeige Presostato	122599

Schema elettrico, Schéma électrique, Diagram, Schaltplan, Esquema de conexiones.

SPOT WELDING

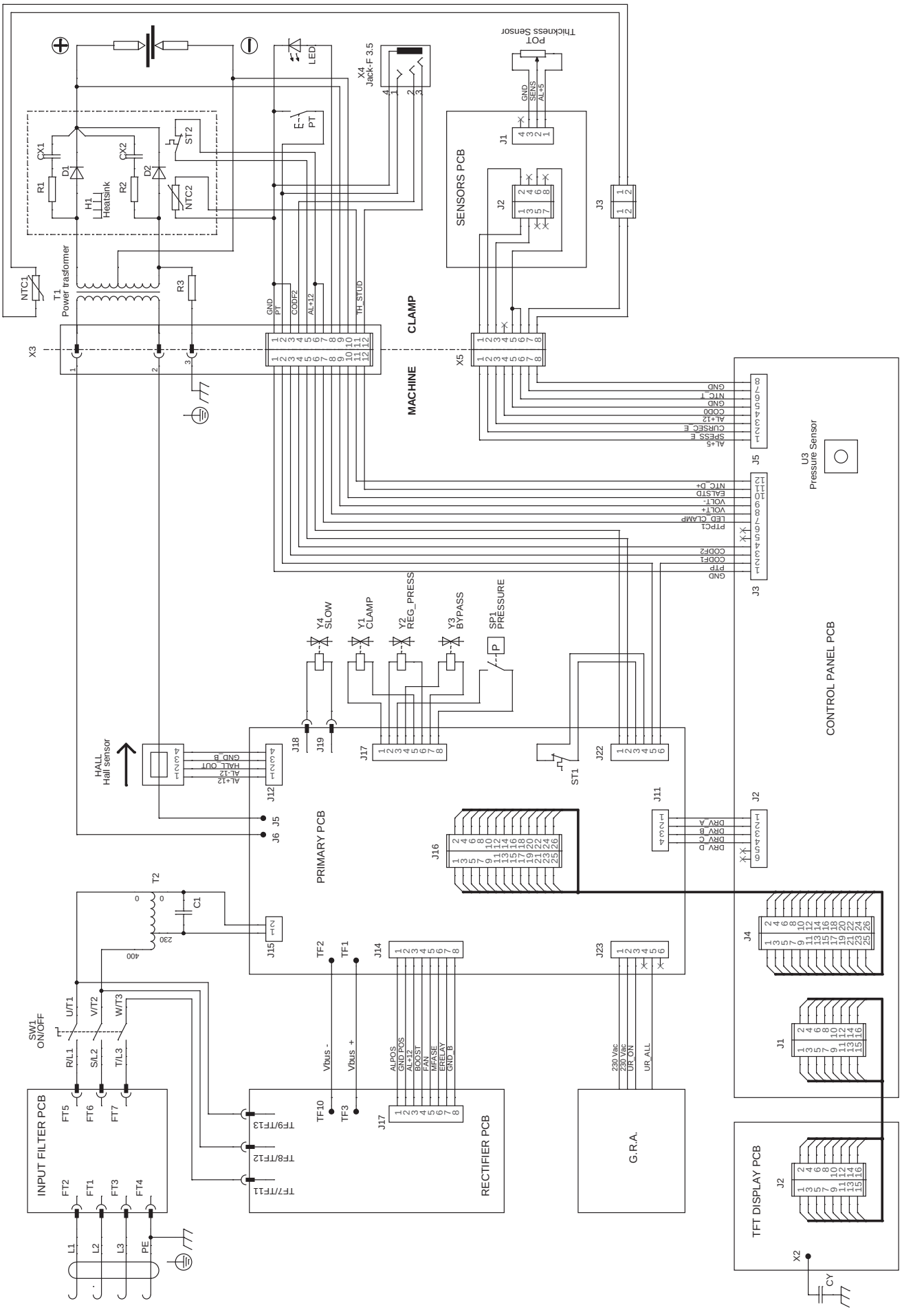

Schema elettrico, Schéma électrique, Diagram, Schaltplan, Esquema de conexiones.

G.R.A. WATER COOLING SYSTEMS

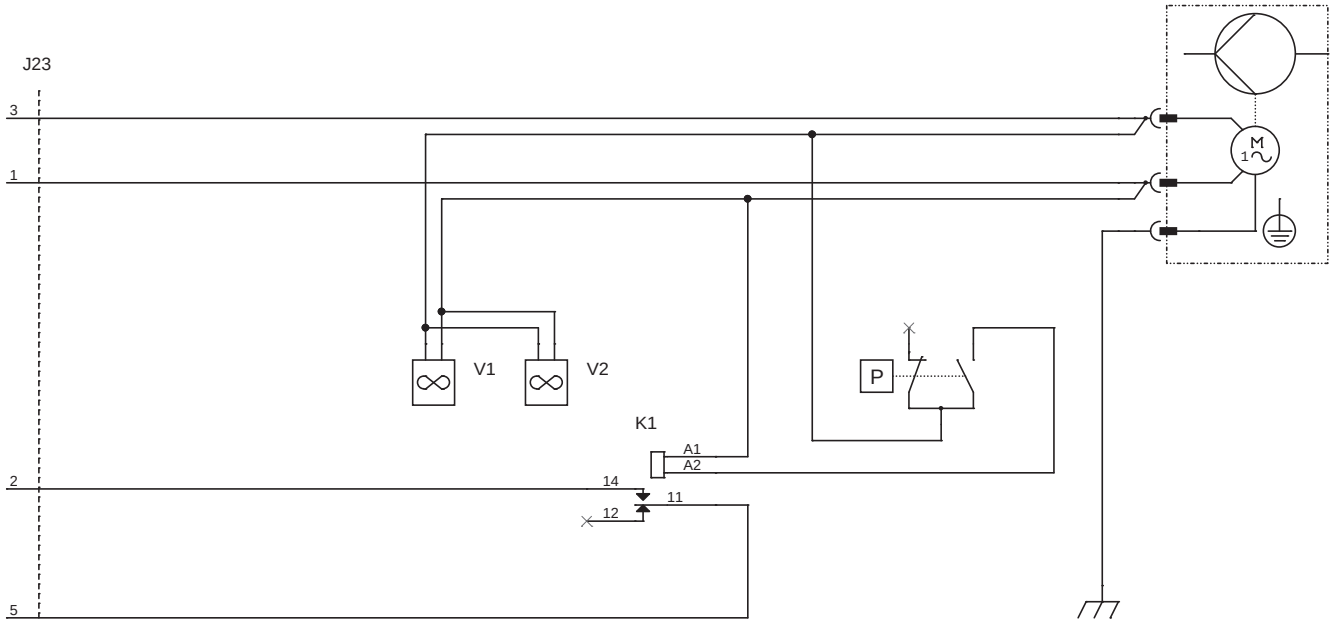

PNEUMATIC

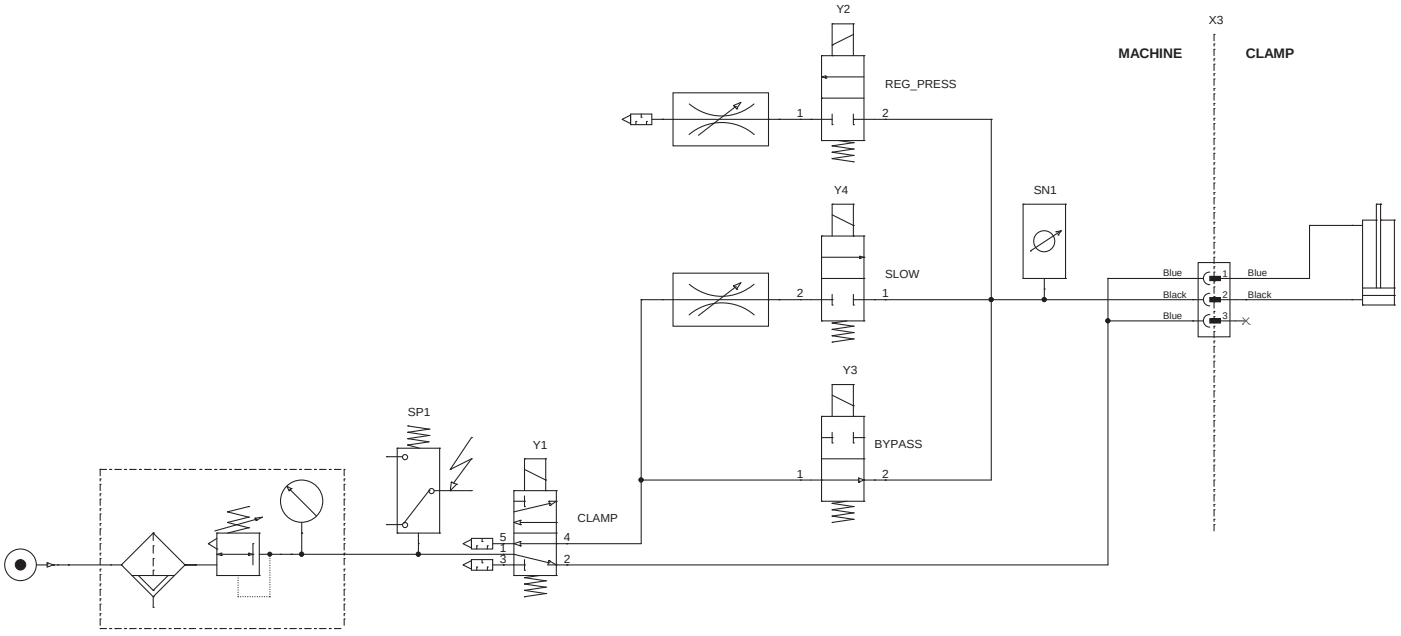

ELENCO PEZZI DI RICAMBIO
LISTE PIECES DETACHEES
SPARE PARTS LIST
ERSATZTEILLISTE
PIEZAS DE REPUESTO

PNEUMATIC SPOT WELDING CLAMP “C” SMART AQUA

TELWIN®

Esploso macchina, Dessin appareil, Machine drawing, Explosions Zeichnung des Geräts, Diseño seccionado maquina.

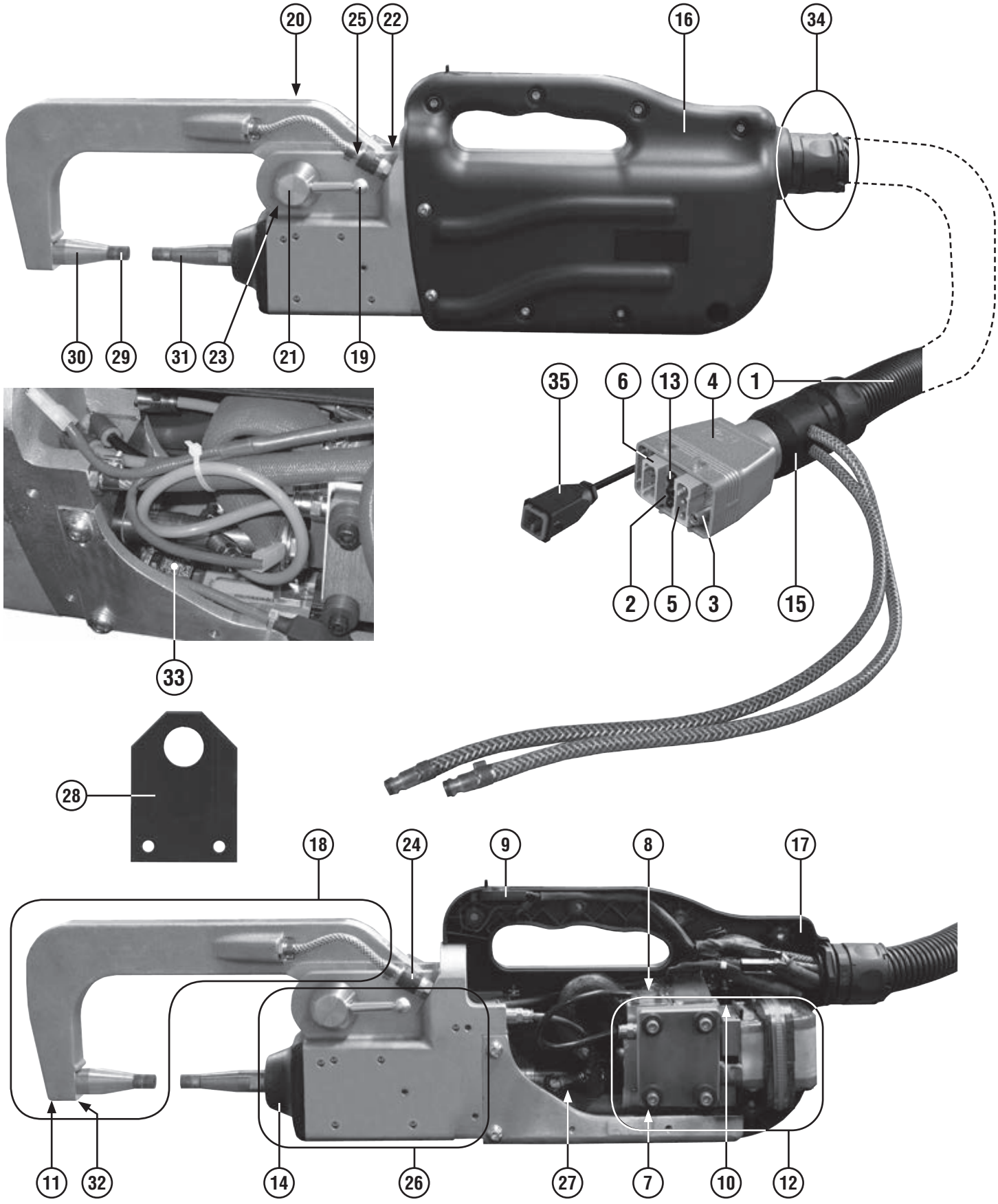

REF.	ELENCO PEZZI DI RICAMBIO PIECES DETACHEES SPARE PARTS LIST ERSATZTEILLISTE PIEZAS DE REPUESTO	CODICE CODE KODE
1	Kit tubo corrugato m.5 Kit tube annelé m.5 Corrugated tube kit m.5 Wellrohrkit m.5 Kit tubo corrugado m.5	981110
2	Modulo pneumatico 3 poli Module pneumatique 3 pin 3 Pin pneumatic module Pneumatisches modul 3 pin Modulo neumatico 3 pin	121337
3	Telaio Cadre Frame Rahmen Marco	121345
4	Kit custodia presa volante Kit etui prise mobile Mobile socket case kit Bewegliche steckdose gehäuse kit Kit custodia enchufe movil	982511
5	Cablaggio i° presa volante Cable i° prix mobile Mobile socket i°cable Beweglicher steckdose i°kabel Cable i° enchufe movil	124232
6	Cablaggio II° presa volante Cable II° prix mobile Mobile socket II°cable Beweglicher steckdose II° kabel Cable II° enchufe movil	124645
7	Ass.Snubber Set snubber Set snubber Set snubber Set snubber	124704
8	Ass.Ntc + termostato Set ntc + thermostat Set ntc + thermostat Set ntc + thermostat Set ntc + termostato	124644
9	Cavo interruttore Cable interrupteur Switch cable Schalter kabel Cable interruptor	124731
10	Cablaggio Cablage Wire set Kabelsatz Cables	124300
11	Vite Vis Screw Schraube Vis	212478
12	Trasformatore Transformateur Transformer Transformator Transformador	314828
13	Raccordo portatubo maschio Raccord supporttuyau male Male pipeholding connection Maennlichrohrhalterung verbindung Racordo sosten tubo macho	322871
14	Supporto anteriore antirotazione Support frontal anti rotation Front support anti-rotation Anti-rotation front behalter Apoyo frente antirotacion	322920
15	Giunto cavi Joint cables Cables joint Kabel kupplung Junto cables	321100
16	Guscio sinistro Coquille gauche Left shell Linke schale Casco izquierdo	322922
17	Guscio destro Coquille droit Right shell Richte schale Casco derecho	322923
18	Kit assieme braccio Set bras Arm set Arm set Set brazo	981517
19	Leva Levier Lever Hebel Palanca	432682
20	Boccola filettata Douille filetee Threaded bush Gewindebuchse Casquillo filetado	484104
21	Volantino Volant Handwheel Regelungshandrad Volante	484105
22	Perno Pivot Pin Zapfen Perno	484106
23	Boccola Douille Bush Buchse Casquillo	484444
24	Attacco rapido Attelage rapide Quick connection Schnellanschluss Conexion rapida	602340
25	Innesto rapido Embrayage rapide Quick connection Schnellkupplung Connecion rapida	742597
26	Kit cilindro Kit cilinder Cylinder kit Zylinder kit Kit cilindro	981518
27	Attacco rapido Attelage rapide Quick connection Schnellanschluss Conexion rapida	602318
28	Golfaro Anneau d'ancrage Ring Ringmutter Anillo	645448
29	Cap "a" ø13 ca l=18mm Cap "a" ø13 ca l=18mm Cap "a" ø13 ca l=18mm Cap "a" ø13 ca l=18mm Cap "a" ø13 ca l=18mm	690130
30	Portaelettrodo fisso Porte electrode fixe Fixed electrode holder Fester elektrodenhalter Sosten electrodo fijo	690134
31	Portaelettrodo mobile Porte electrode moblie Mobile electrode holder Bewechlicher elektrodenhalter Sosten electrodo movil	690135
32	Anello or Bague Or-ring Or-ring Anillo or	742512
33	Scheda Platine Card Karte Tarjeta	117097
34	Kit raccordo portatubo Kit raccord Connector kit Verbindungskit Kit racor	980980
35	Cablaggio - riconoscimento automatico Cablage - reconnaissance automatique Wire set - automatic recognition Kabelsatz - automatische erkennung Cables - reconocimiento automático	125094

ELENCO PEZZI DI RICAMBIO
LISTE PIECES DETACHEES
SPARE PARTS LIST
ERSATZTEILLISTE
PIEZAS DE REPUESTO

MODULAR 20 TI

TELWIN®

Esploso macchina, Dessin appareil, Machine drawing, Explosions Zeichnung des Geräts, Diseño seccionado maquina.



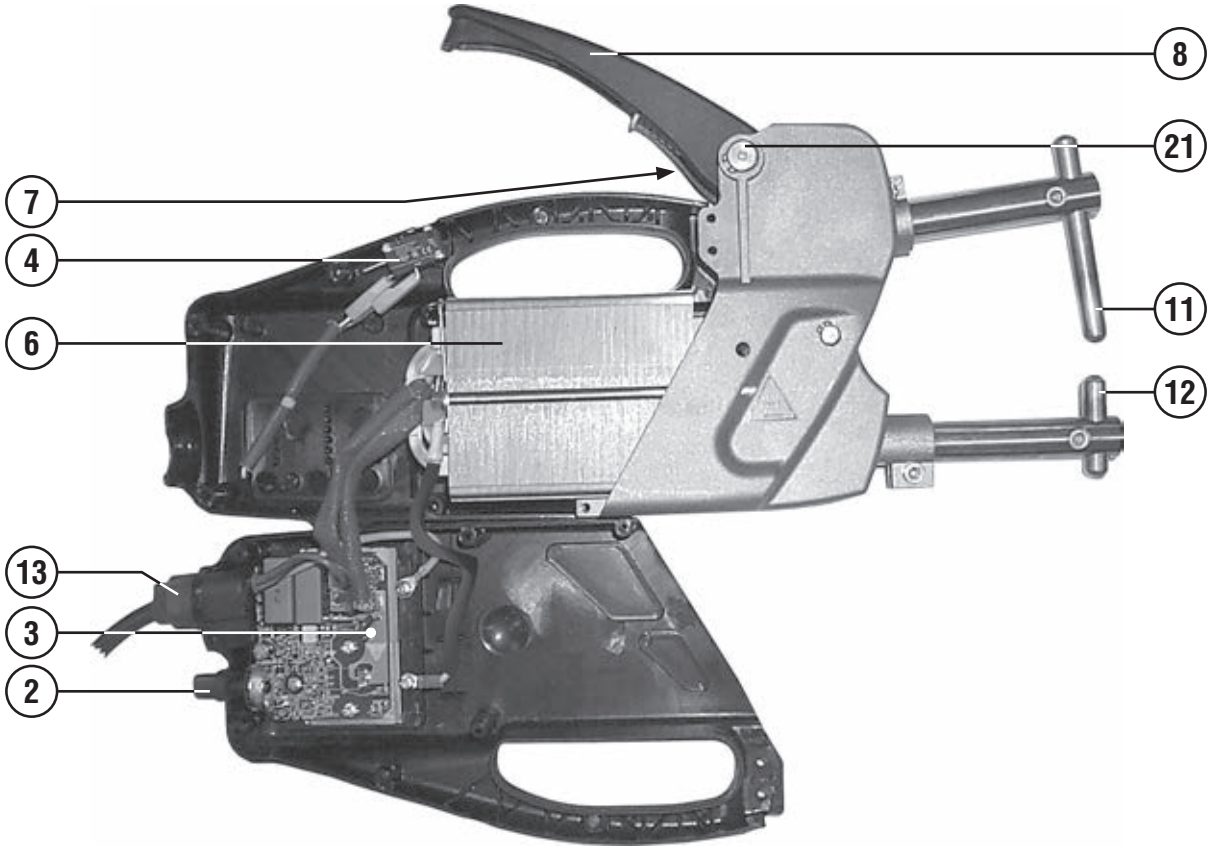

REF.	ELENCO PEZZI DI RICAMBIO PIECES DETACHEES SPARE PARTS LIST ERSATZTEILLISTE PIEZAS DE REPUESTO	CODICE CODE KODE
2	Manopola per potenziometro Poignee pour potentiometre Potentiometer knob Potentiometergriff Manija por potenciometro	112299
3	Kit assieme scheda timer Kit frontal + platine timer Front panel + timer module kit Geraetefront + timer karte kit Kit frontal + tarjeta timer	980666
4	Microinterruttore Microinterrupteur Microswitch Microschalter Micro interruptor	122393
5	Cavo alim. 3g2.5 3 M Cable alim. 3g2.5 3 M Mains cable 3g2.5 3 M Netzkabel 3g2.5 3 M Cable alim. 3g2.5 3 M	132104
6	Trasformatore Transformateur Transformer Transformator Transformador	169152
7	Vite Vis Screw Schraube Tornillo	212163
8	Copri manico Couvre poignee Handle cover Griffsdeckel Cubre manija	322512
10	Kit braccio portaelettrodo Kit bras portelectrode Electrode holder arm kit Elektrodenhalter arm kit Kit portaelectrodo	980290
11	Elettrodo dritto l=100mm d.12mm Electrode droit l=100mm d.12mm Straight electrode l=100mm d.12mm Gerade elektrode l=100mm d.12mm Electrodo recto l=100mm d.12mm	690049
12	Elettrodo dritto l=50mm d.12mm Electrode droit l=50mm d.12mm Straight electrode l=50mm d.12mm Gerade elektrode l=50mm d.12mm Electrodo recto l=50mm d.12mm	690050
13	Kit pressacavo + ghiera Kit presse cable + embout Kit cable bushing + ring nut Kit kabelhalter + nutmutter Kit prensa cable + virola	990046
14	Guscio destro Coquille droit Right shell Rechte schale Casco derecho	322526
15	Guscio sinistro Coquille gauche Left shell Linke schale Casco izquierdo	322509
16	Morsetto braccio superiore Borne bras superieur Upper arm clamp Oberenarmeklemme Bocadillo brazo superior	522020
17	Morsetto braccio inferiore Borne bras inferieur Lower arm clamp Unterarmklemme Bocadillo brazo inferior	522023
21	Kit minuteria riparazione Kit de petites pièces de réparation Small parts repair kit Kit von reparaturteile Kit de piezas pequeñas de reparación	982174

Schema elettrico, Schéma électrique, Diagram, Schaltplan, Esquema de conexiones.

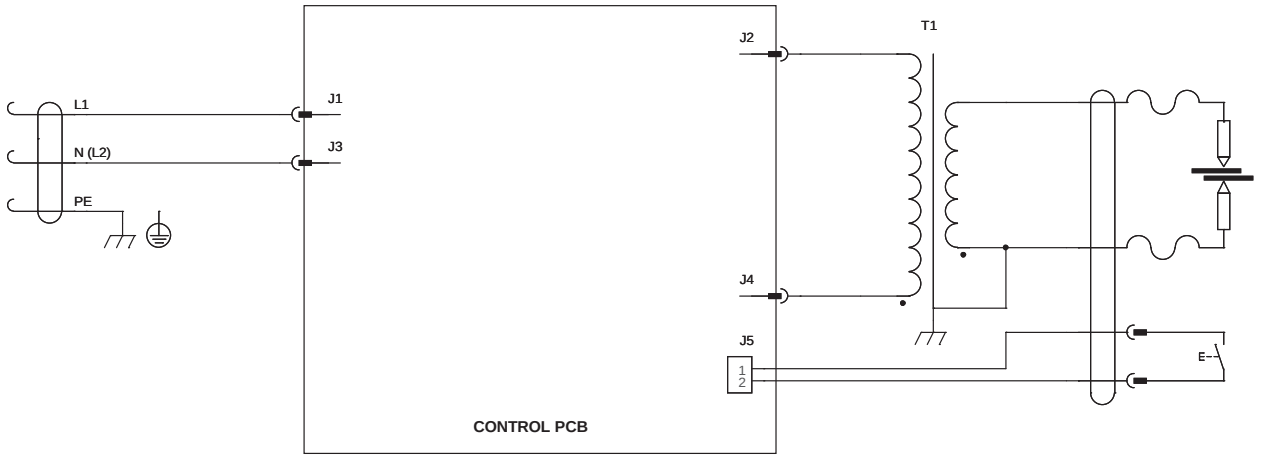

ELENCO PEZZI DI RICAMBIO
LISTE PIECES DETACHEES
SPARE PARTS LIST
ERSATZTEILLISTE
PIEZAS DE REPUESTO

DIGITAL MODULAR 230
DIGITAL MODULAR 400

TELWIN®

Esploso macchina, Dessin appareil, Machine drawing, Explosions Zeichnung des Geräts, Diseño seccionado maquina.



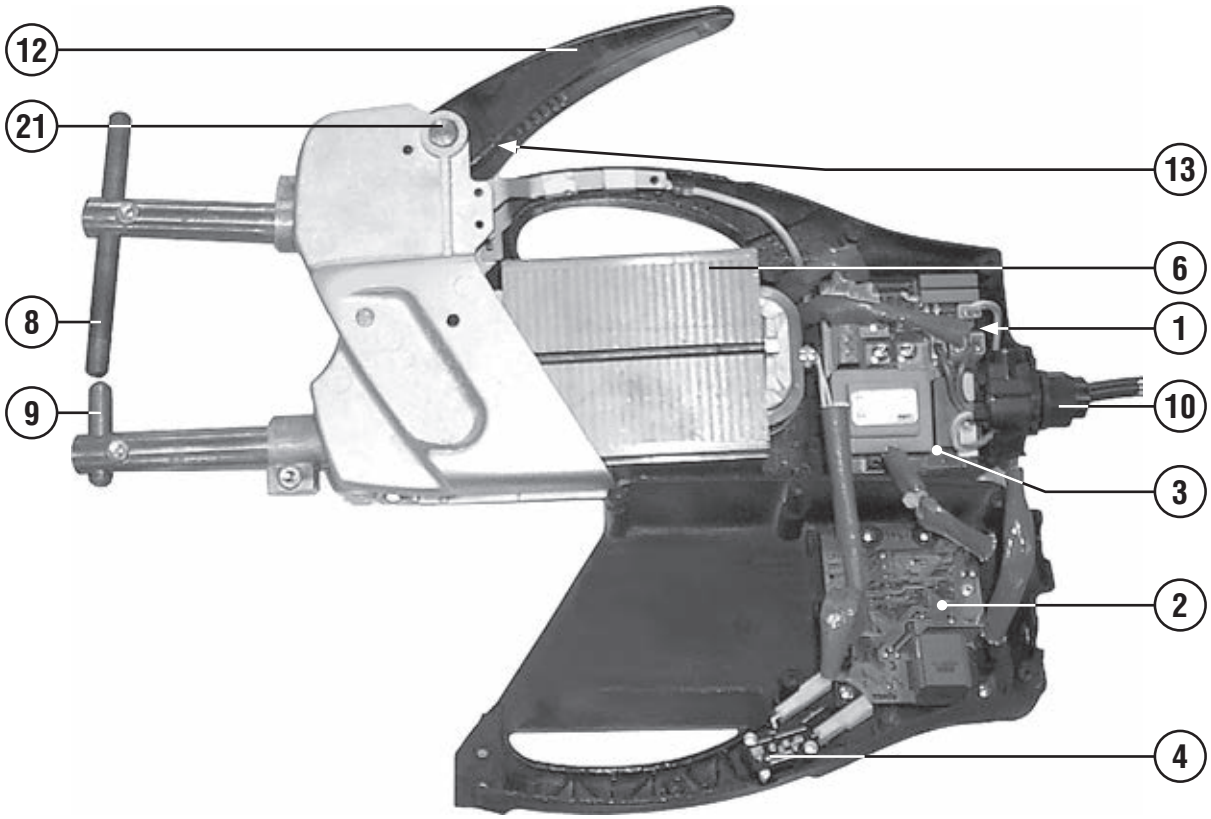

REF.	ELENCO PEZZI DI RICAMBIO PIECES DETACHEES SPARE PARTS LIST ERSATZTEILLISTE PIEZAS DE REPUESTO	DIGITAL MODULAR 230 CODICE	DIGITAL MODULAR 400 CODE KODE
1	Scr Scr Scr Scr Scr	113585	113585
2	Kit scheda controllo Kit carte controle Control board kit Steuerungskarte kit Kit tarjeta control	980474	980474
3	Kit scheda potenza Kit carte puissance Power board kit Leistungskartekit Kit tarjeta potencia	980469	980470
4	Microinterruttore Microinterrupteur Microswitch Microschalter Micro interruptor	122393	122393
5	Cavo alim. 3g2.5 3 M Cable alim. 3g2.5 3 M Mains cable 3g2.5 3 M Netzkabel 3g2.5 3 M Cable alim. 3g2.5 3 M	132104	132104
6	Trasformatore Transformateur Transformer Transformator Transformador	169034	169036
7	Kit braccio portaelettrodo Kit bras portelectrode Electrode holder arm kit Elektrodenhalter arm kit Kit portaelectrodo	980290	980290
8	Elettrodo dritto l=100mm d.12mm Electrode droit l=100mm d.12mm Straight electrode l=100mm d.12mm Gerade elektrode l=100mm d.12mm Electrodo recto l=100mm d.12mm	690049	690049
9	Elettrodo dritto l=50mm d.12mm Electrode droit l=50mm d.12mm Straight electrode l=50mm d.12mm Gerade elektrode l=50mm d.12mm Electrodo recto l=50mm d.12mm	690050	690050
10	Kit pressacavo + ghiera Kit presse cable + embout Kit cable bushing + ring nut Kit kabelhalter + nutmutter Kit prensa cable + virola	990046	990046
12	Copri manico Couvre poignee Handle cover Griffsdeckel Cubre manija	322512	322512
13	Vite Vis Screw Schraube Tornillo	212163	212163

REF.	ELENCO PEZZI DI RICAMBIO PIECES DETACHEES SPARE PARTS LIST ERSATZTEILLISTE PIEZAS DE REPUESTO	DIGITAL MODULAR 230 CODICE	DIGITAL MODULAR 400 CODE KODE
15	Guscio destro Coquille droit Right shell Rechte schale Casco derecho	322510	322510
16	Guscio sinistro Coquille gauche Left shell Linke schale Casco izquierdo	321033	321033
17	Morsetto braccio superiore Borne bras superieur Upper arm clamp Oberenarmeklemme Bocadillo brazo superior	522020	522020
18	Morsetto braccio inferiore Borne bras inferieur Lower arm clamp Unterarmklemme Bocadillo brazo inferior	522023	522023
21	Kit minuteria riparazione Kit de petites pièces de réparation Small parts repair kit Kit von reparaturteile Kit de piezas pequeñas de reparación	982174	982174

Schema elettrico, Schéma électrique, Diagram, Schaltplan, Esquema de conexiones.

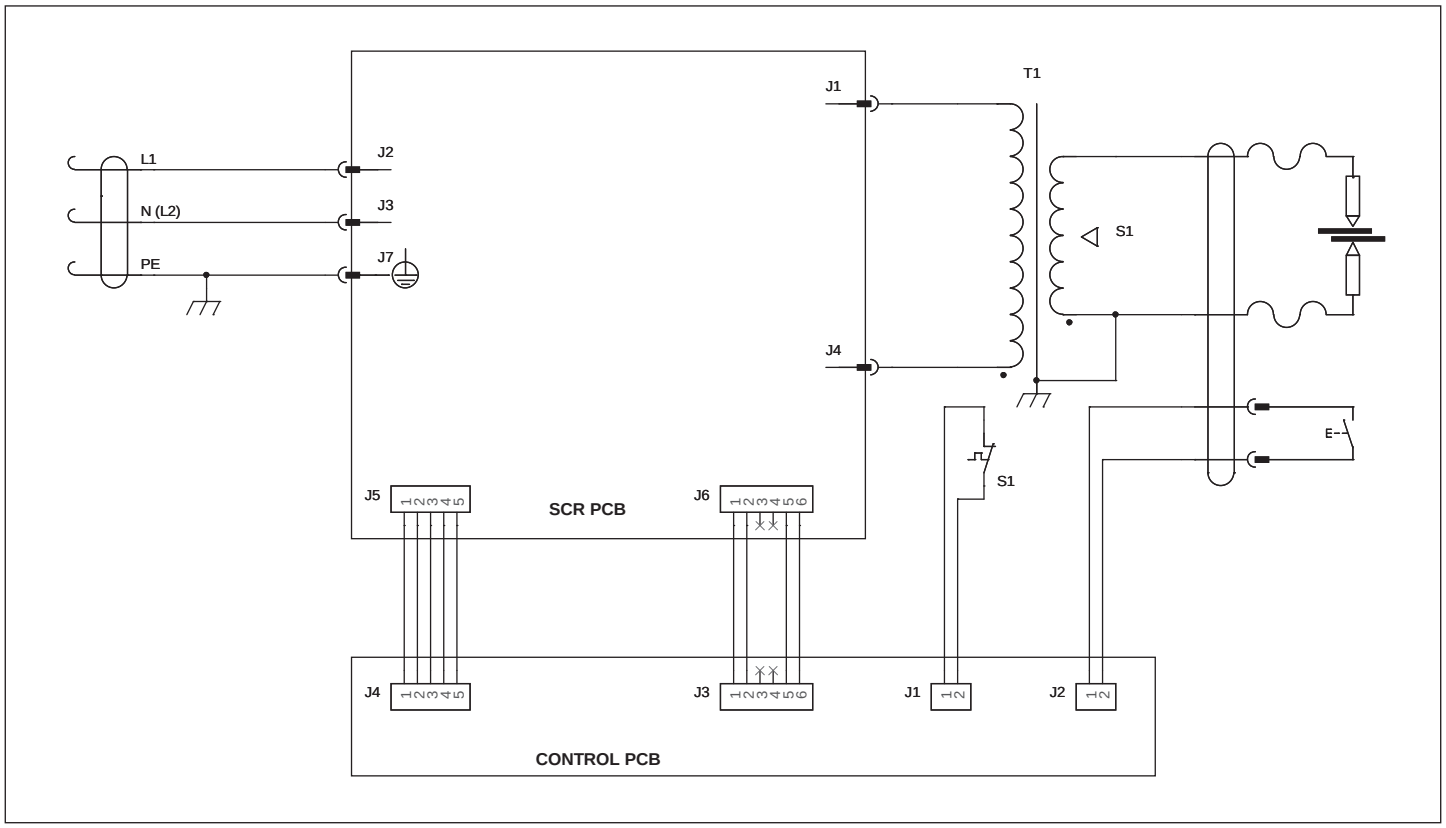

ELENCO PEZZI DI RICAMBIO
LISTE PIECES DETACHEES
SPARE PARTS LIST
ERSATZTEILLISTE
PIEZAS DE REPUESTO

PTE 18 LCD

Esploso macchina, Dessin appareil, Machine drawing, Explosions Zeichnung des Geräts, Diseño seccionado maquina.

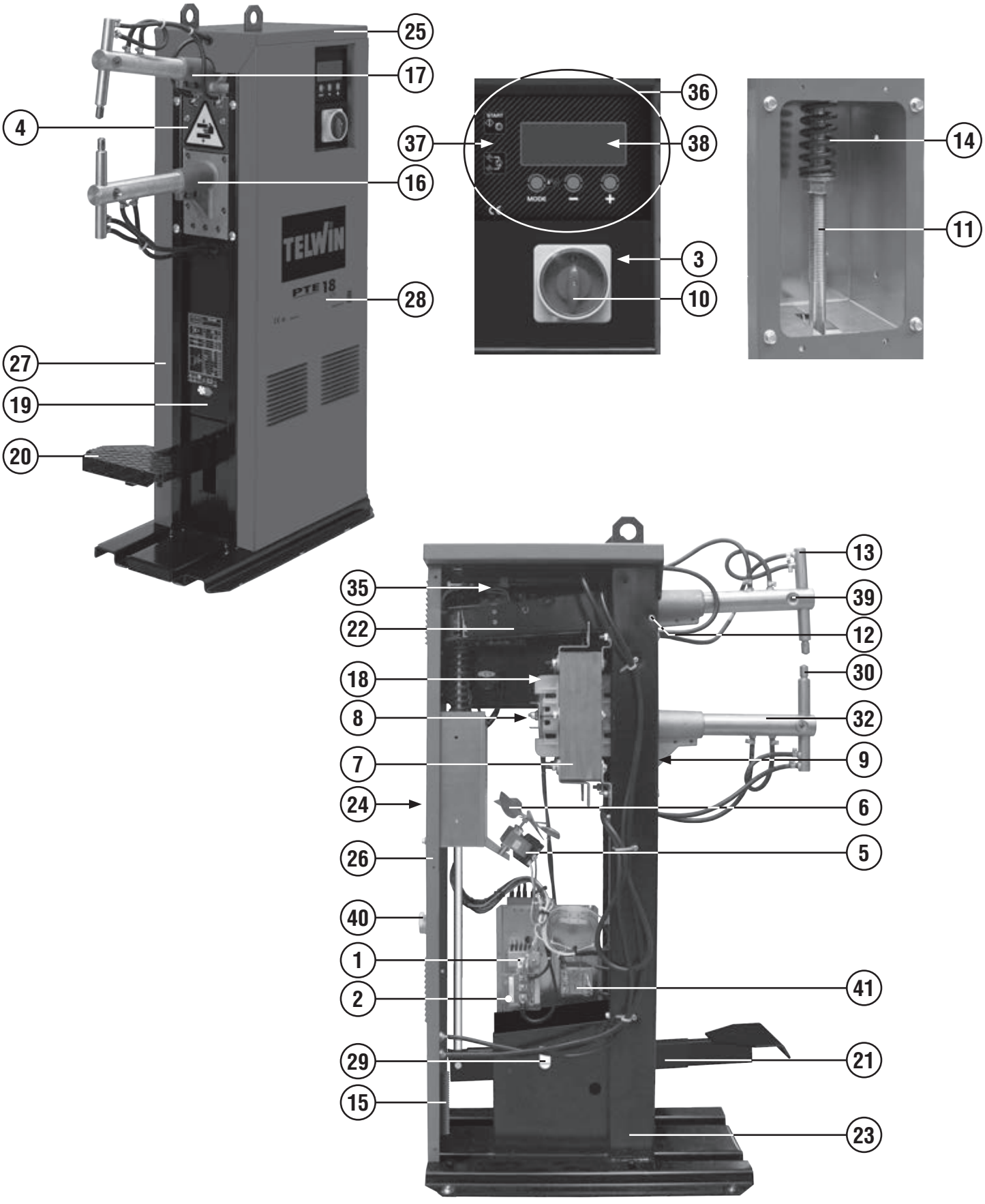

REF.	ELENCO PEZZI DI RICAMBIO PIECES DETACHEES SPARE PARTS LIST ERSATZTEILLISTE PIEZAS DE REPUESTO	CODICE CODE KODE
1	Scr Scr Scr Scr Scr	112692
2	Scheda snubber scr Platine snubber scr Scr snubber card Scr snubber karte Tarjeta scr snubber	114628
3	Commutatore Commutateur Switch Schalter Conmutador	122018
4	Mascherina protezione Masque protection Protection mask Schutzteil Mascara de proteccion	142116
5	Motore Moteur Motor Motor Motor	152073
6	Ventola Helice Fan blade Fluegelrad Aventador	152111
7	Trasformatore 400v Transformateur 400v Transformer 400v Transformator 400v Transformador 400v	169883
8	Rondella isolante Rondelles isolantes Insulating washer Isolierschaubepaar Arandela aislante	322272
9	Isolante Isolant Insulating part Isolierteil Aislador	322274
10	Assieme manopola per commutatore Set poigne pour commutateur Switch knob set Umschaltergriff set Set manjia para conmutador	323101
11	Asta filettata Tige filetee Threaded bar Gewinde bar Asta con filetado	422246
12	Perno Pivot Pin Zapfen Perno	422266
13	Portaelettrodo xp Porte electrode xp Electrode holder xp Elektrodenhalter xp Portaelectrodo xp	443020
14	Molla pressione Ressort pression Pressure spring Drucksfeder Muelle a presion	452020
15	Molla Ressort Spring Feder Muelle	452077
16	Fusione braccio inferiore Fusion bras inferieur Lower arm smelting Unter arm schmelzung Fundicion brazo inferior	512025
17	Fusione mobile Fusion mobile Movable melting Bewegliches schmelzung Fundicion moble	512026
18	Bobina secondario Bobine secondaire Secondary coil Sekundaerspule Bobina secundario	513051
19	Frontale Partie frontal Front panel Geraetefront Frontal	642528
20	Pedaliera Pedale Pedal Steuerpedal Pedal	644538
21	Assieme leva Ensemble levier Lever assy Hebelset Grupo leva	644539
22	Leva braccio Levier bras Arm lever Arme hebel Leva brazo	644543
23	Telaio Chassis Frame Rahmen Chasis	645734
24	Coperchio Capot Cover Deckel Tapadera	650326
25	Mantello Couvercle Top cover Kasten Tapadera	650392
26	Retro Partie arriere Back panel Rueckseite Trasera	651236
27	Fianco destro Partie laterale droit Side panel right Seitenblech recht Panel derecho	656204
28	Fianco sinistro Partie lateral gauche Left panel Links seitenblech Flanco isquierdo	656205
29	Perno Pivot Pin Zapfen Perno	681179
30	Elettrodo diritto standard xp Electrode droite standard xp Standard straight electrode xp Gerade standard elektrode xp Electrodo recto estandar xp	690035
31	Elettrodo ricurvo xp Electrode courbe xp Bent electrode xp Gebogene elektrode xp Eletrodo curvo xp	690036
32	Xp1 kit bracci 350 mm Xp1 kit bras 350 mm Xp1 kit arms 350 mm Xp1 kit arme 350 mm Xp1 kit brazos 350 mm	803100
33	Xp2 kit bracci 500 mm Xp2 kit bras 500 mm Xp2 kit arms 500 mm Xp2 kit arme 500 mm Xp2 kit brazos 500 mm	803101
34	Xp3 kit bracci 700 mm Xp3 kit bras 700 mm Xp3 kit arms 700 mm Xp3 kit arme 700 mm Xp3 kit brazos 700 mm	803102
35	Kit cablaggio termostato Kit cable thermostat Thermostat cable kit Thermostat kabel kit Kit cable termostato	981775
36	Kit cruscotto Kit tableau Dashboard kit Schaltbrett kit Kit cuadro	981776
37	Kit scheda controllo Kit carte controle Control board kit Steuerungskarte kit Kit tarjeta control	981884
38	Kit assieme display Kit affichage Display kit Tafel kit Kit pantalla	981780
39	Kit boccola per bracci Kit bague pour bras Kit bush for arms Kit buchse fuer arme Kit aro por brazos	990187
40	Kit pressacavo Kit presse cable Cable bushing kit Kabeldurchgang kit Kit prensa cable	990368
41	Trasformatore ausiliario Transformateur auxiliaire Auxiliary transformer Hilfstransformator Transformador auxiliar	990598

Schema elettrico, Schéma électrique, Diagram, Schaltplan, Esquema de conexiones.

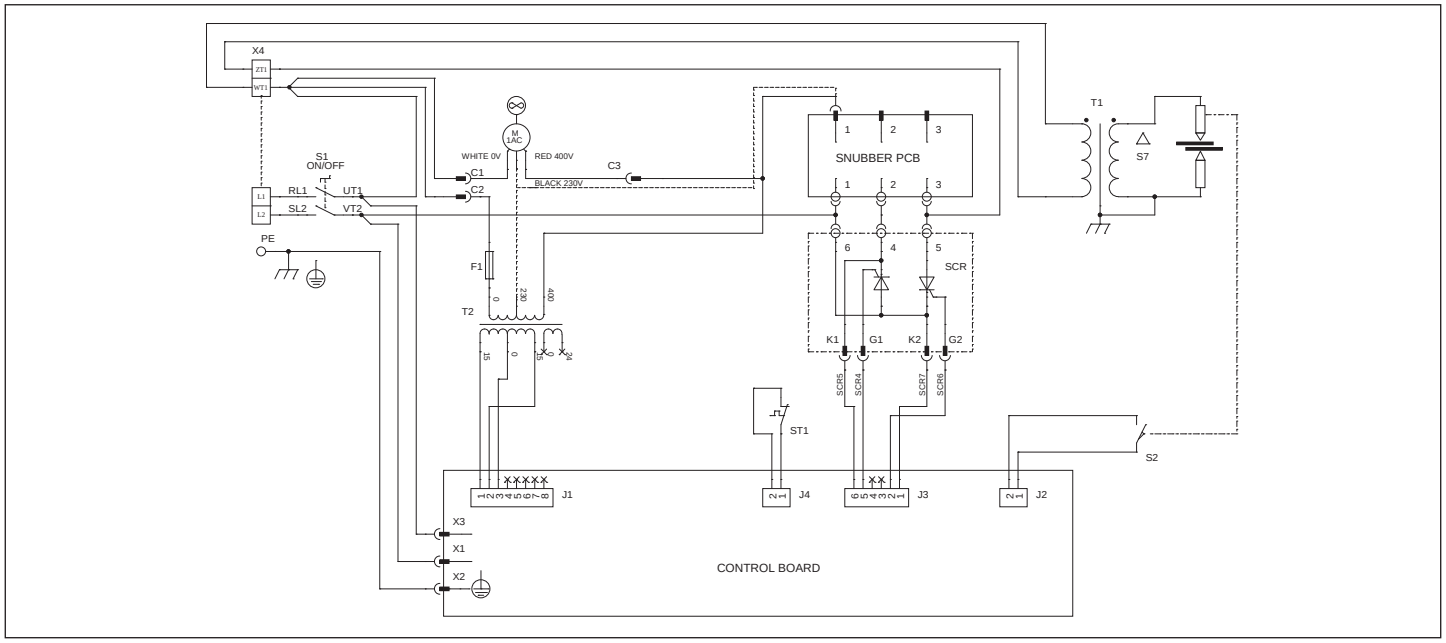

ELENCO PEZZI DI RICAMBIO
LISTE PIECES DETACHEES
SPARE PARTS LIST
ERSATZTEILLISTE
PIEZAS DE REPUESTO

PTE 28 LCD

Esploso macchina, Dessin appareil, Machine drawing, Explosions Zeichnung des Geräts, Diseño seccionado maquina.

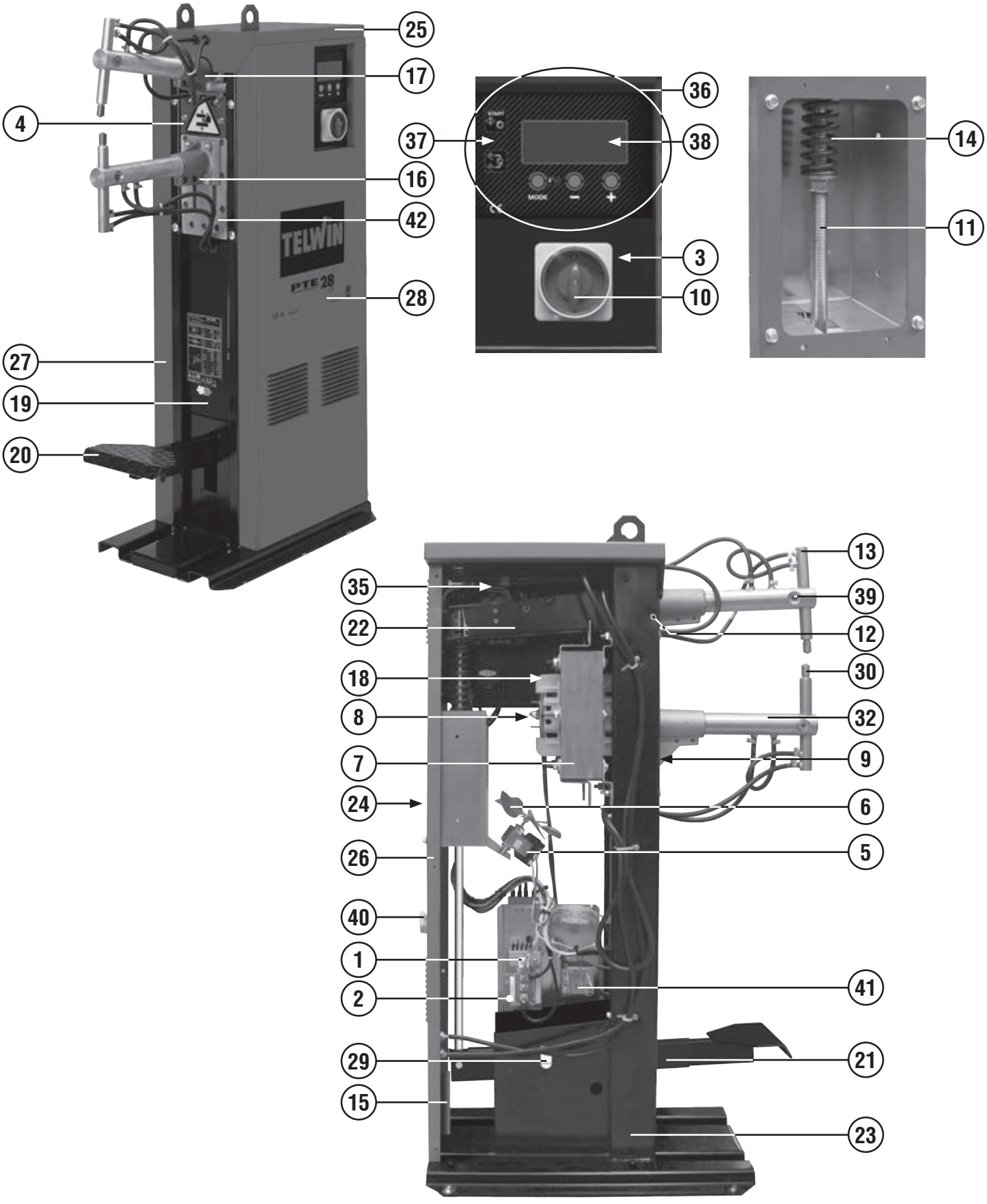

REF.	ELENCO PEZZI DI RICAMBIO PIECES DETACHEES SPARE PARTS LIST ERSATZTEILLISTE PIEZAS DE REPUESTO	CODICE CODE KODE
1	Scr Scr Scr Scr Scr	113121
2	Scheda snubber scr Platine snubber scr Scr snubber card Scr snubber karte Tarjeta scr snubber	114628
3	Commutatore Commutateur Switch Schalter Interruptor	122019
4	Mascherina protezione Masque protection Protection mask Schutzteil Mascara de proteccion	142117
5	Motore Moteur Motor Motor Motor	152073
6	Ventola Helice Fan blade Fluegelrad Aventador	152111
7	Trasformatore 400v Transformateur 400v Transformer 400v Transformator 400v Transformador 400v	169884
8	Rondella isolante Rondelles isolantes Insulating washer Isolierschaubepaar Arandela aislante	322272
9	Isolante Isolant Insulating part Isolierteil Aislador	322274
10	Manopola per commutatore Poignee pour commutateur Switch knob Umschaltergriff Manija por conmutador	122060
11	Asta filettata Tige filetee Threaded bar Gewinde bar Asta con filetado	422246
12	Perno Pivot Pin Zapfen Perno	422266
13	Portaelettrodo xp Porte electrode xp Electrode holder xp Elektrodenhalter xp Portaelectrodo xp	443020
14	Molla Ressort Spring Feder Muelle	452021
15	Molla Ressort Spring Feder Muelle	452077
16	Fusione braccio inferiore Fusion bras inferieur Lower arm smelting Unter arm schmelzung Fundicion brazo inferior	512023
17	Fusione mobile Fusion mobile Movable melting Bewegliches schmelzung Fundicion moble	512026
18	Bobina secondario Bobine secondaire Secondary coil Sekundaerspule Bobina secundario	513052
19	Frontale Partie frontal Front panel Gerätefront Frontal	642580
20	Pedaliera Pedale Pedal Steuerpedal Pedal	644538
21	Assieme leva Ensemble levier Lever assy Hebelset Grupo leva	644539
22	Leva braccio Levier bras Arm lever Arme hebel Leva brazo	644543
23	Telaio Chassis Frame Rahmen Chasis	645734
24	Coperchio Capot Cover Deckel Tapadera	650326
25	Mantello Couvercle Top cover Kasten Tapadera	650392
26	Retro Partie arriere Back panel Rueckseite Trasera	651236
27	Fianco destro Partie lateral droite Right side panel Rechts seitenblech Flanco derecho	656211
28	Fianco sinistro Partie lateral gauche Left side panel Links seitenblech Flanco isquierdo	656212
29	Perno Pivot Pin Zapfen Perno	681179
30	Elettrodo diritto standard xp Electrode droite standard xp Standard straight electrode xp Gerade standard elektrode xp Electrodo recto estandar xp	690035
31	Elettrodo ricurvo xp Electrode courbe xp Bent electrode xp Gebogene elektrode xp Eletrodo curvo xp	690036
32	Xp1 kit bracci 350 mm Xp1 kit bras 350 mm Xp1 kit arms 350 mm Xp1 kit arme 350 mm Xp1 kit brazos 350 mm	803100
33	Xp2 kit bracci 500 mm Xp2 kit bras 500 mm Xp2 kit arms 500 mm Xp2 kit arme 500 mm Xp2 kit brazos 500 mm	803101
34	Xp3 kit bracci 700 mm Xp3 kit bras 700 mm Xp3 kit arms 700 mm Xp3 kit arme 700 mm Xp3 kit brazos 700 mm	803102
35	Kit cablaggio termostato Kit cable thermostat Thermostat cable kit Thermostat kabel kit Kit cable termostato	981775
36	Kit cruscotto Kit tableau Dashboard kit Schaltbrett kit Kit cuadro	981776
37	Kit scheda controllo Kit carte controle Control board kit Steuerungskarte kit Kit tarjeta control	981884
38	Kit assieme display Kit affichage Display kit Tafel kit Kit pantalla	981780
39	Kit boccola per bracci Kit bague pour bras Kit bush for arms Kit buchse fuer arme Kit aro por brazos	990187
40	Kit pressacavo Kit presse cable Cable bushing kit Kabeldurchgang kit Kit prensa cable	990368
41	Trasformatore ausiliario Transformateur auxiliaire Auxiliary transformer Hilfstransformator Transformador auxiliar	990598
42	Piastra fissaggio braccio Plaque d'appuit inferieur Lower base Unterspurplatte Chapa inferior por apoyo	512024

Schema elettrico, Schéma électrique, Diagram, Schaltplan, Esquema de conexiones.

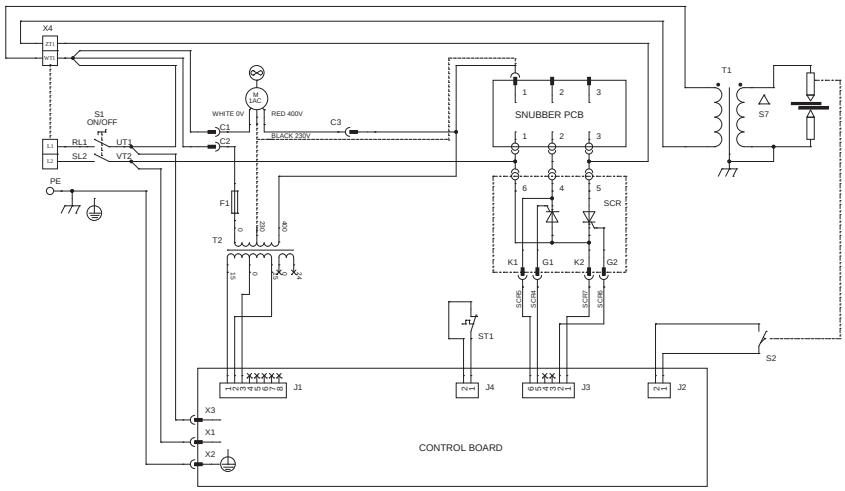

ELENCO PEZZI DI RICAMBIO
LISTE PIECES DETACHEES
SPARE PARTS LIST
ERSATZTEILLISTE
PIEZAS DE REPUESTO

PCP 18 LCD

Esploso macchina, Dessin appareil, Machine drawing, Explosions Zeichnung des Geräts, Diseño seccionado maquina.

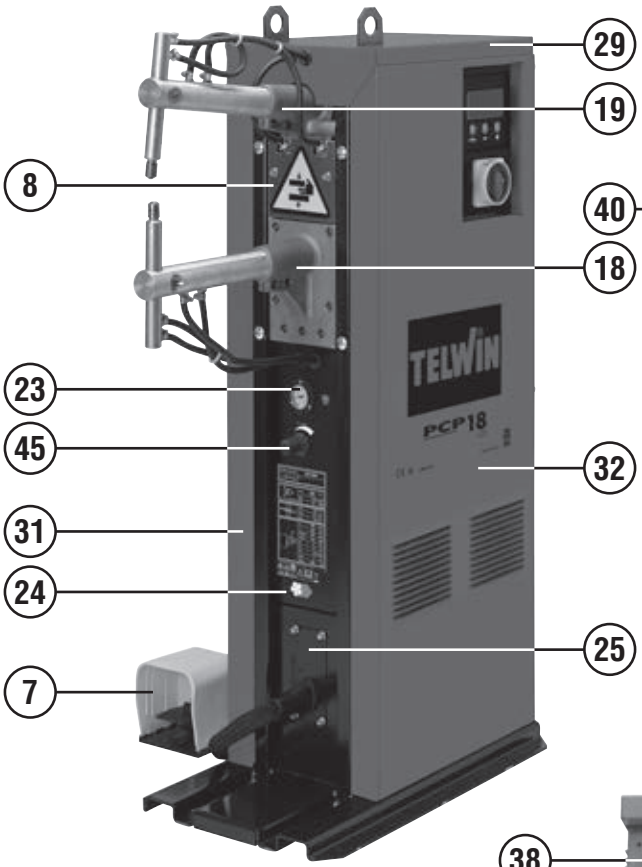

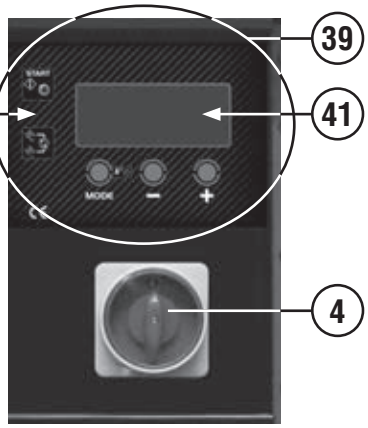

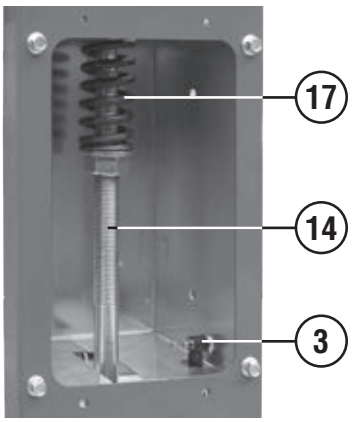

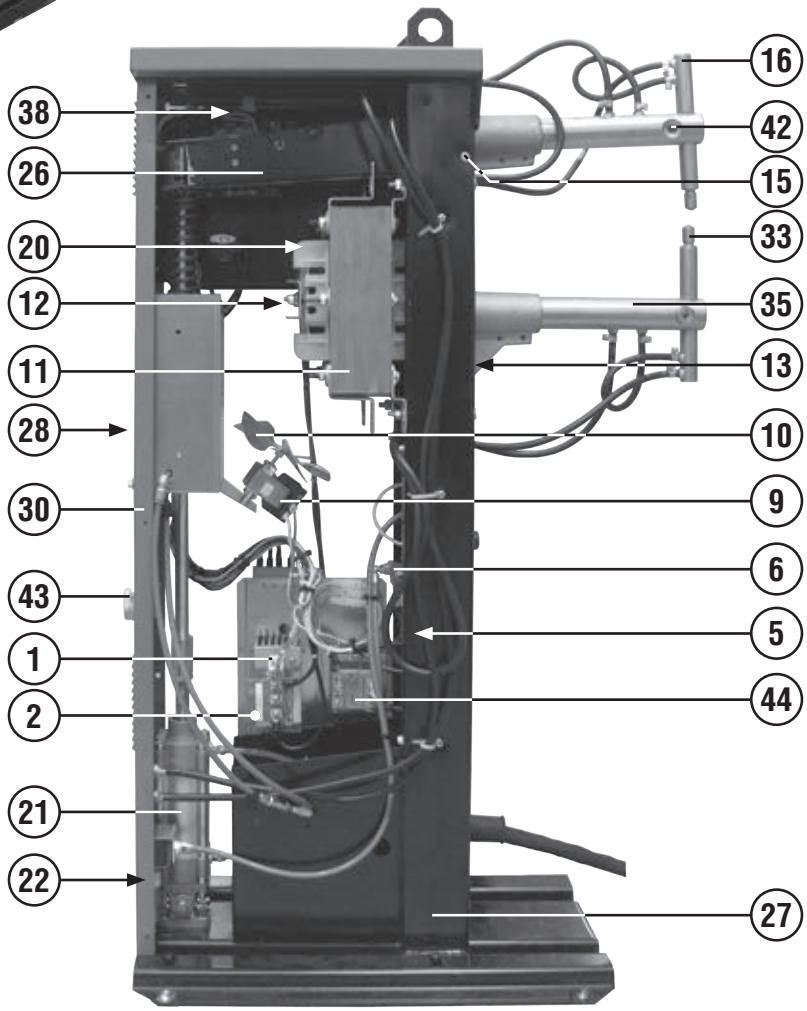

REF.	ELENCO PEZZI DI RICAMBIO PIECES DETACHEES SPARE PARTS LIST ERSATZTEILLISTE PIEZAS DE REPUESTO	CODICE CODE KODE
1	Scr Scr Scr Scr Scr	112692
2	Scheda snubber scr Platine snubber scr Scr snubber card Scr snubber karte Tarjeta scr snubber	114628
3	Regolatore di flusso Regulateur de debit Flow regulator Durchflussregler Regulador de flujo	121677
4	Commutatore Commutateur Switch Schalter Conmutador	122531
5	Pressostato Pressostat Pressure switch Druckanzeige Presostato	122599
6	Elettrovalvola Electrovanne Electro-valve Elektroventil Electrovalvola	122798
7	Set pedale Set pedale Pedal set Steuerpedalset Set pedal	124929
8	Mascherina protezione Masque protection Protection mask Schutzteil Mascara de proteccion	142116
9	Motore Moteur Motor Motor Motor	152073
10	Ventola Helice Fan blade Fluegelrad Aventador	152111
11	Trasformatore 400v Transformateur 400v Transformer 400v Transformator 400v Transformador 400v	169883
12	Rondella isolante Rondelles isolantes Insulating washer Isolierschaubepaar Arandela aislante	322272
13	Isolante Isolant Insulating part Isolierteil Aislador	322274
14	Asta filettata Tige filetee Threaded rod Gewinder stab Asta filetada	422248
15	Perno Pivot Pin Zapfen Perno	422266
16	Portaelettrodo xp Porte electrode xp Electrode holder xp Elektrodenhalter xp Portaelectrodo xp	443020
17	Molla pressione Ressort pression Pressure spring Drucksfeder Muelle a presion	452020
18	Fusione braccio inferiore Fusion bras inferieur Lower arm smelting Unter arm schmelzung Fundicion brazo inferior	512025
19	Fusione mobile Fusion mobile Movable melting Bewegliches schmelzung Fundicion moble	512026
20	Bobina secondario Bobine secondaire Secondary coil Sekundaerspule Bobina secundario	513051
21	Pistone pneumatico Piston pneumatique Pneumatic piston Pneumatischer kolben Piston neuumatico	602001
22	Filtro aria Filtre d'air Air filter Luftfilter Filtro aire	602040
23	Manometro Manometre Manometer Manometer Manometer	602326
24	Frontale Partie frontal Front panel Geraetefront Frontal	642506
25	Mascherina Masque Mask Maske Mascara	644542
26	Leva braccio Levier bras Arm lever Arme hebel Leva brazo	644543
27	Telaio Chassis Frame Rahmen Chasis	645734
28	Coperchio Capot Cover Deckel Tapadera	650326
29	Mantello Couvercle Top cover Kasten Tapadera	650392
30	Retro Partie arriere Back panel Rueckseite Trasera	651236
31	Fianco destro Partie laterale droit Side panel right Seitenblech recht Panel derecho	656193
32	Fianco sinistro Partie lateral gauche Left panel Links seitenblech Flanco isquierdo	656194
33	Elettrodo diritto standard xp Electrode droite standard xp Standard straight electrode xp Gerade standard elektrode xp Electrodo recto estandar xp	690035
34	Elettrodo ricurvo xp Electrode courbe xp Bent electrode xp Gebogene elektrode xp Eletrodo curvo xp	690036
35	Xp1 kit bracci 350 mm Xp1 kit bras 350 mm Xp1 kit arms 350 mm Xp1 kit arme 350 mm Xp1 kit brazos 350 mm	803100
36	Xp2 kit bracci 500 mm Xp2 kit bras 500 mm Xp2 kit arms 500 mm Xp2 kit arme 500 mm Xp2 kit brazos 500 mm	803101
37	Xp3 kit bracci 700 mm Xp3 kit bras 700 mm Xp3 kit arms 700 mm Xp3 kit arme 700 mm Xp3 kit brazos 700 mm	803102
38	Kit cablaggio termostato Kit cable thermostat Thermostat cable kit Thermostat kabel kit Kit cable termostato	981775
39	Kit cruscotto Kit tableau Dashboard kit Schaltbrett kit Kit cuadro	981776
40	Kit scheda controllo Kit fiche de controle Control pcb kit Kontrollekarte kit Kit tarjeta de controlo	981779
41	Kit assieme display Kit affichage Display kit Tafel kit Kit pantalla	981780
42	Kit boccola per bracci Kit bague pour bras Kit bush for arms Kit buchse fuer arme Kit aro por brazos	990187
43	Kit pressacavo Kit presse cable Cable bushing kit Kabeldurchgang kit Kit prensa cable	990368
44	Trasformatore ausiliario Transformateur auxiliaire Auxiliary transformer Hilfstransformator Transformador auxiliar	990598
45	Riduttore pressione Reducteur de pression Gas regulator Druckminderer Reductor de presion	124899

Schema elettrico, Schéma électrique, Diagram, Schaltplan, Esquema de conexiones.

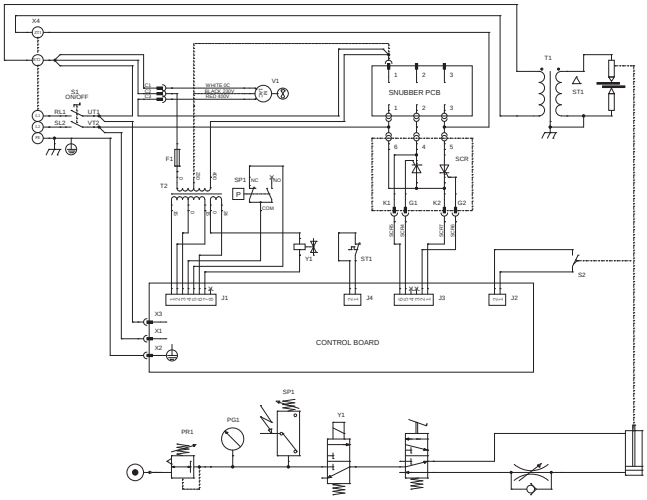

ELENCO PEZZI DI RICAMBIO
LISTE PIECES DETACHEES
SPARE PARTS LIST
ERSATZTEILLISTE
PIEZAS DE REPUESTO

PCP 28 LCD

Esploso macchina, Dessin appareil, Machine drawing, Explosions Zeichnung des Geräts, Diseño seccionado maquina.

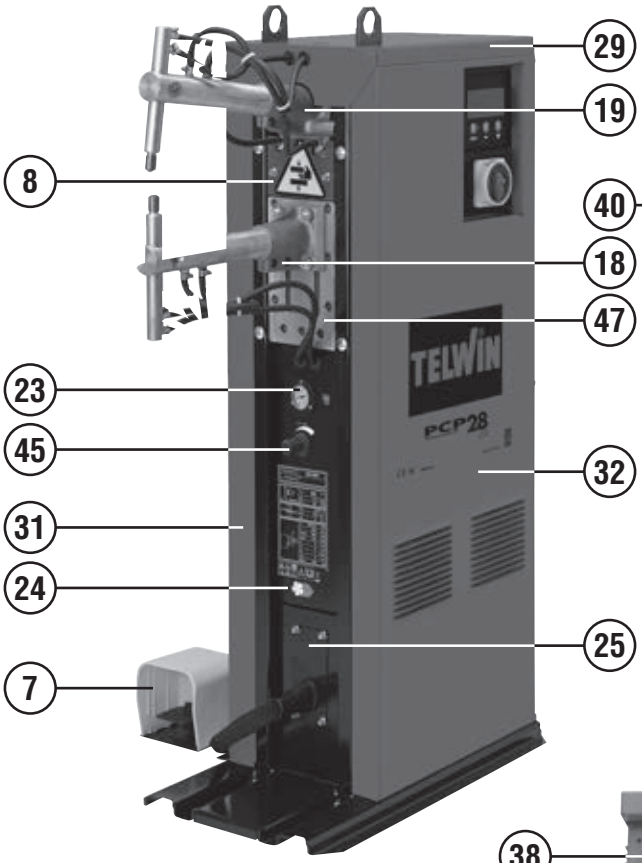

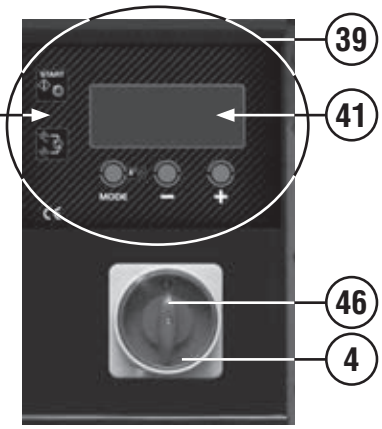

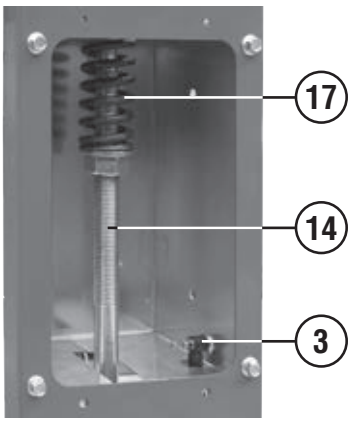

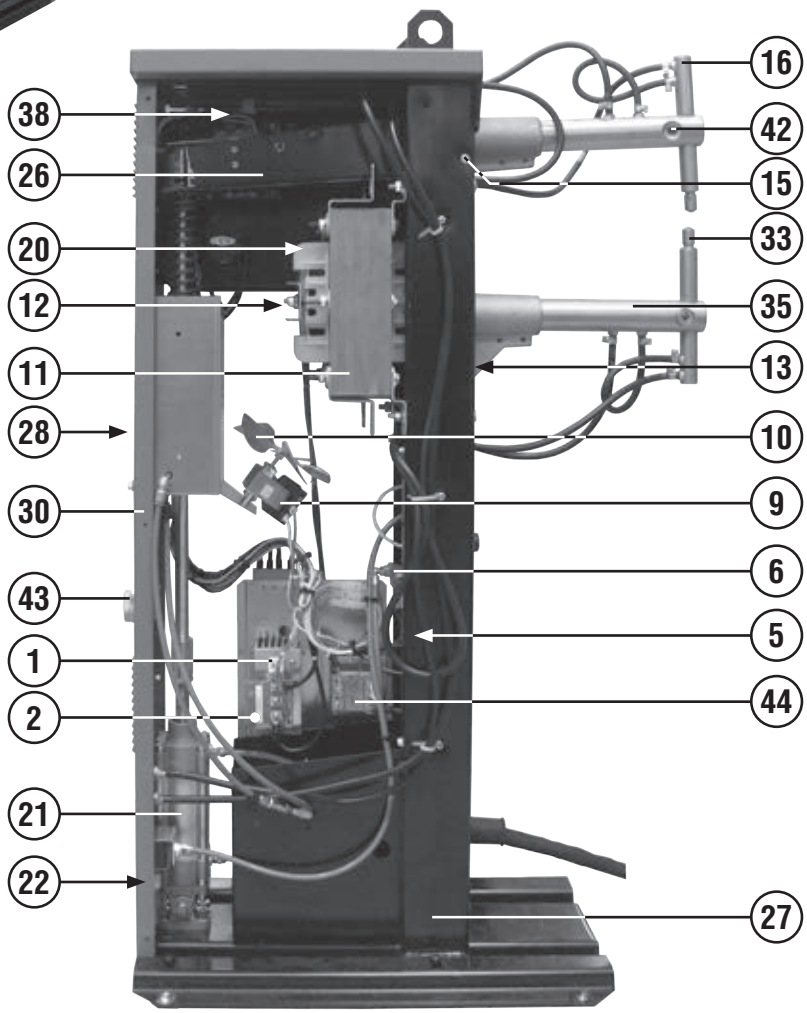

REF.	ELENCO PEZZI DI RICAMBIO PIECES DETACHEES SPARE PARTS LIST ERSATZTEILLISTE PIEZAS DE REPUESTO	CODICE CODE KODE
1	Scr Scr Scr Scr Scr	113121
2	Scheda snubber scr Platine snubber scr Scr snubber card Scr snubber karte Tarjeta scr snubber	114628
3	Regolatore di flusso Regulateur de debit Flow regulator Durchflussregler Regulador de flujo	121677
4	Commutatore Commutateur Switch Schalter Interruptor	122019
5	Pressostato Pressostat Pressure switch Druckanzeige Presostato	122599
6	Elettrovalvola Electrovanne Electrovalve Elektroventil Electrovalvola	122124
7	Set pedale Set pedale Pedal set Steuerpedalset Set pedal	124929
8	Mascherina protezione Masque protection Protection mask Schutzteil Mascara de proteccion	142117
9	Motore Moteur Motor Motor Motor	152073
10	Ventola Helice Fan blade Fluegelrad Aventador	152111
11	Trasformatore 400v Transformateur 400v Transformer 400v Transformator 400v Transformador 400v	169884
12	Rondella isolante Rondelles isolantes Insulating washer Isolierschaubepaar Arandela aislante	322272
13	Isolante Isolant Insulating part Isolierteil Aislador	322274
14	Asta filettata Tige filetee Threaded rod Gewinder stab Asta filetada	422248
15	Perno Pivot Pin Zapfen Perno	422266
16	Portaelettrodo xp Porte electrode xp Electrode holder xp Elektrodenhalter xp Portaelectrodo xp	443020

REF.	ELENCO PEZZI DI RICAMBIO PIECES DETACHEES SPARE PARTS LIST ERSATZTEILLISTE PIEZAS DE REPUESTO	CODICE CODE KODE
17	Molla Ressort Spring Feder Muelle	452021
18	Fusione braccio inferiore Fusion bras inferieur Lower arm smelting Unter arm schmelzung Fundicion brazo inferior	512023
19	Fusione mobile Fusion mobile Movable melting Bewegliches schmelzung Fundicion moble	512026
20	Bobina secondario Bobine secondaire Secondary coil Sekundaerspule Bobina secundario	513052
21	Pistone pneumatico Piston pneumatique Pneumatic piston Pneumatischer kolben Piston neumatico	602002
22	Filtro aria Filtre d'air Air filter Luftfilter Filtro aire	602040
23	Manometro Manometre Manometer Manometer Manometer	602326
24	Frontale Partie frontal Front panel Gerätefront Frontal	642531
25	Mascherina Masque Mask Maske Mascara	644542
26	Leva braccio Levier bras Arm lever Arme hebel Leva brazo	644543
27	Telaio Chassis Frame Rahmen Chasis	645734
28	Coperchio Capot Cover Deckel Tapadera	650326
29	Mantello Couvercle Top cover Kasten Tapadera	650392
30	Retro Partie arriere Back panel Rueckseite Trasera	651236
31	Fianco dx Partie lateral Right side panel Rechtes seitenteil Panel derecho	656207
32	Fianco sx Partie lateral Side panel Linkes seitenteil Panel izquierdo	656208

REF.	ELENCO PEZZI DI RICAMBIO PIECES DETACHEES SPARE PARTS LIST ERSATZTEILLISTE PIEZAS DE REPUESTO	CODICE CODE KODE
33	Elettrodo diritto standard xp Electrode droite standard xp Standard straight electrode xp Gerade standard elektrode xp Electrodo recto estandar xp	690035
34	Elettrodo ricurvo xp Electrode courbe xp Bent electrode xp Gebogene elektrode xp Eletrodo curvo xp	690036
35	Xp1 kit bracci 350 mm Xp1 kit bras 350 mm Xp1 kit arms 350 mm Xp1 kit arme 350 mm Xp1 kit brazos 350 mm	803100
36	Xp2 kit bracci 500 mm Xp2 kit bras 500 mm Xp2 kit arms 500 mm Xp2 kit arme 500 mm Xp2 kit brazos 500 mm	803101
37	Xp3 kit bracci 700 mm Xp3 kit bras 700 mm Xp3 kit arms 700 mm Xp3 kit arme 700 mm Xp3 kit brazos 700 mm	803102
38	Kit cablaggio termostato Kit cable thermostat Thermostat cable kit Thermostat kabel kit Kit cable termostato	981775
39	Kit cruscotto Kit tableau Dashboard kit Schaltbrett kit Kit cuadro	981776
40	Kit scheda controllo Kit fiche de controle Control pcb kit Kontrollekarte kit Kit tarjeta de controlo	981779
41	Kit assieme display Kit affichage Display kit Tafel kit Kit pantalla	981780
42	Kit boccola per bracci Kit bague pour bras Kit bush for arms Kit buchse fuer arme Kit aro por brazos	990187
43	Kit pressacavo Kit presse cable Cable bushing kit Kabeldurchgang kit Kit prensa cable	990368
44	Trasformatore ausiliario Transformateur auxiliaire Auxiliary transformer Hilfstransformator Transformador auxiliar	990598
45	Riduttore di pressione Reducteur de pression Air regulator Druckminderer Reductor de presion	125013
46	Manopola per commutatatore Poigne pour commutateur Switch knob Umschaltergriff Manjia para conmutador	122840
47	Piastra fissaggio braccio Plaque d'appuit inferieur Lower base Unterspurplatte Chapa inferior por apoyo	512024

Schema elettrico, Schéma électrique, Diagram, Schaltplan, Esquema de conexiones.

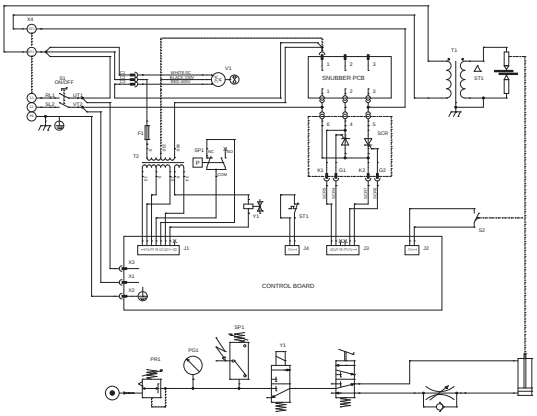

ELENCO PEZZI DI RICAMBIO
LISTE PIECES DETACHEES
SPARE PARTS LIST
ERSATZTEILLISTE
PIEZAS DE REPUESTO

G.R.A. 90

TELWIN

Esploso macchina, Dessin appareil, Machine drawing, Explosions Zeichnung des Geräts, Diseño seccionado maquina.



REF.	ELENCO PEZZI DI RICAMBIO PIECES DETACHEES SPARE PARTS LIST ERSATZTEILLISTE PIEZAS DE REPUESTO	CODICE CODE KODE
1	Copri interruttore Couvre interrupteur Switch cover Schalterdeckel Cubre interruptor	122353
1	Interruttore Interrupteur Switch Schalter Interruptor	122381
2	Cavo alim. 3g1.5 0 M Cable alim. 3g1.0 2 M Mains cable 3g1.0 2 M Netzkabel 3g1.5 0 M Cable alim. 3g1.5 0 M	132335
3	Ventola Helice Fan blade Fluegelrad Aventador	152217
4	Piedino Embout Foot Fuss Pie	323001
5	Maniglia Poignee Handle Handgriff Manija	322267
6	Filtro Filtre Filter Filter Filtro	322268
7	Attacco rapido Embout rapide Quick connection Schnellanschluss Conexion rapida	602033
8	Radiatore Radiateur Radiator Kuehler Radiador	602038
9	Kit valvola Kit vanne Valve kit Ventil kit Kit valvula	990955
10	Raccordo Raccord Pipe fitting Anschluss Empalme	602051
11	Kit elettropompa Kit pompe electrique Electric pump kit Elektropump kit Kit bomba electrica	990382
13	Kit frontale Kit partie frontal Kit front panel Kit geraetefront Kit frontal	990835
14	Mantello Capot Top cover Gehäusedeckel Tapadera	650687
15	Kit pressacavo + ghiera Kit presse cable + embout Kit cable bushing + ring nut Kit kabelhalter + nutmutter Kit prensa cable + virola	990046
16	Kit serbatoio completo Kit reservoir complete Complete tank kit Kompletter tankkit Kit tanque completo	990363
18	Staffa Etrier Bracket Buegel Estribo	644401

Schema elettrico, Schéma électrique, Diagram, Schaltplan, Esquema de conexiones.

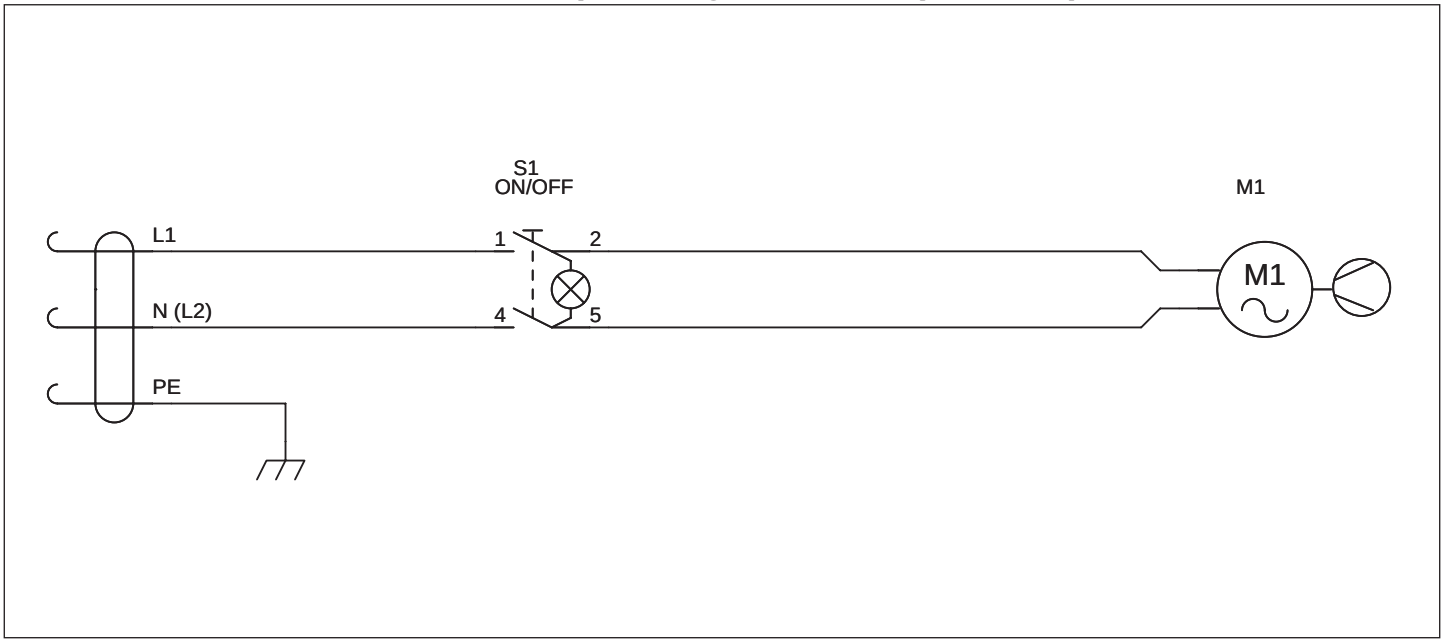

ELENCO PEZZI DI RICAMBIO
LISTE PIECES DETACHEES
SPARE PARTS LIST
ERSATZTEILLISTE
PIEZAS DE REPUESTO

PULSE 30 EVO
PULSE 50 EVO

TELWIN

Esploso macchina, Dessin appareil, Machine drawing, Explosions Zeichnung des Geräts, Diseño seccionado maquina.

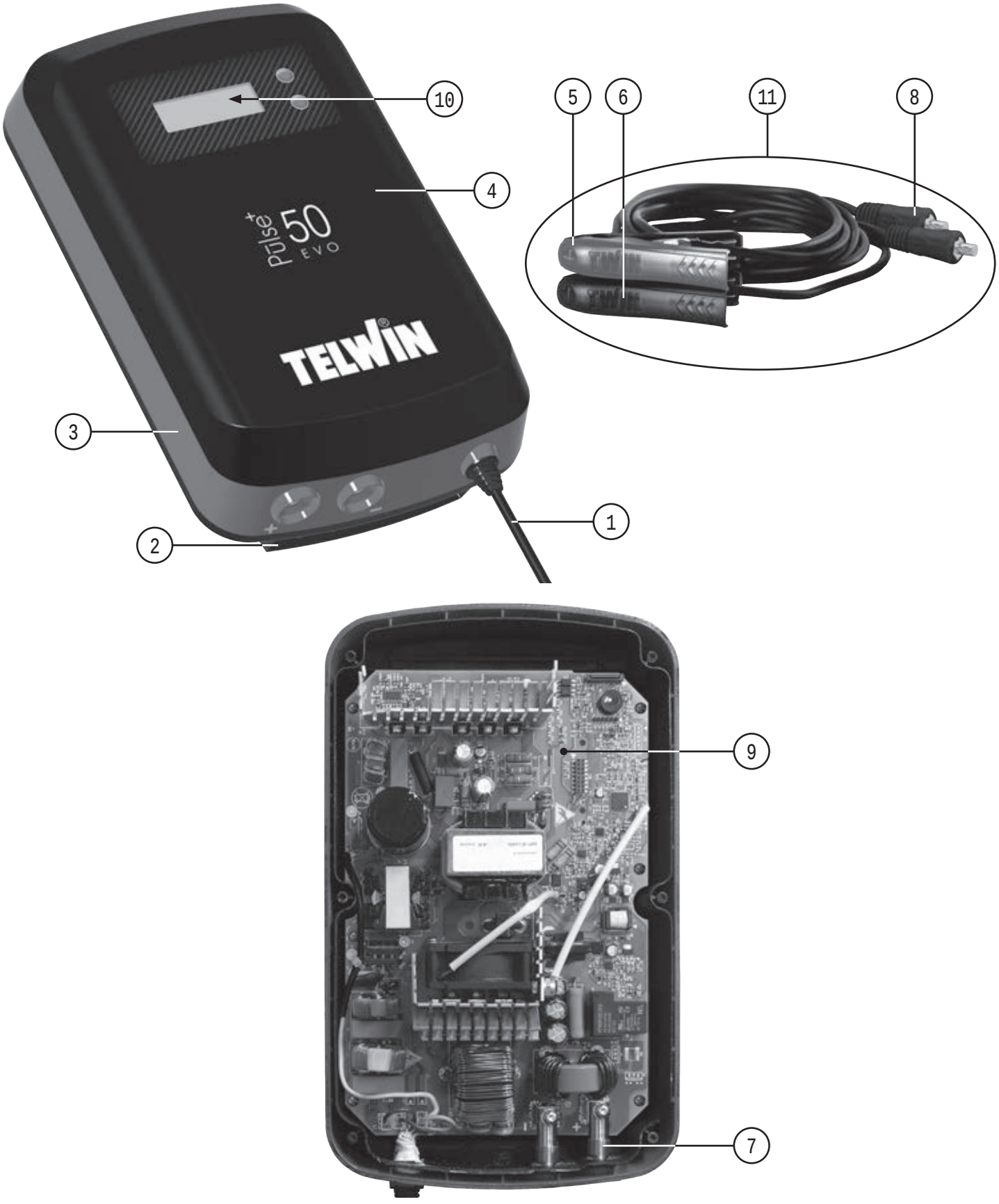

REF.	ELENCO PEZZI DI RICAMBIO PIECES DETACHEES SPARE PARTS LIST ERSATZTEILLISTE PIEZAS DE REPUESTO	PULSE 30 EVO	PULSE 50 EVO
		CODICE	CODE KODE
1	Cavo di alim.H05vv-f 3g00,75 01.50 M Cable de reseau h05vv-f 3g00,75 01.50 M Mains cable h05vv-f 3g00,75 01.50 M Netzkabel h05vv-f 3g00,75 01.50 M Cable aliment.H05vv-f 3g00,75 01.50 M	132473	132473
2	Fondo - nero Chassis - noir Bottom - black Bodenteil - schwarz Fondo - negro	321402	321402
3	Cornice - rossa Cadre - rouge Frame - red Rahmen - rot Marco - rojo	321403	321403
4	Kit frontale + etichetta Kit partie frontal + etiquette Front panel kit + label Gerätefront kit + aufkleber Kit frontal + etiqueta	982352	982353
5	Arizona 70r pinza positivo 70a Arizona 70r pince positiv 70a Arizona 70r positive clamp 70a Arizona 70r positive zange 70a Arizona 70r pinza positivo 70a	712720	712720
6	Arizona 70b pinza di massa 70a Arizona 70b pince de masse 70a Arizona 70b work clamp 70a Arizona 70b masseklemme 70a Arizona 70b pinza de masa 70a	712721	712721
7	Connettore femmina 10 mmq Connecteur femelle 10 mmq Female connector 10 mmq Buchsenverbinder 10 mmq Conector hembra 10 mmq	712749	712749
8	Spina atlas 10mmq Fiche atlas 10mmq Plug atlas 10mmq Stecker atlas 10mmq Enchufe atlas 10mmq	712754	712754
9	Kit scheda carica batteria 40a Kit platine charge batterie 40a Battery charge module kit 40a Batterie-ladekarte kit 40a Kit tarjeta carga batería 40a	982342	982345
10	Kit scheda display Kit carte affichage Display board kit Tafel karte kit Kit tarjeta pantalla	982343	982343
11	Kit cavo 6 mmq 2m positivo/negativo Kit cable 6 mmq 2m positif/negatif Kit cable 6 mmq 2m positive/negative Kit kabel 6 mmq 2m plus/minus Kit cable 6 mmq 2m positivo/negativo	982344	982344

REF.	ELENCO PEZZI DI RICAMBIO PIECES DETACHEES SPARE PARTS LIST ERSATZTEILLISTE PIEZAS DE REPUESTO	PULSE 30 EVO	PULSE 50 EVO
		CODICE	CODE KODE

Schema elettrico, Schéma électrique, Diagram, Schaltplan, Esquema de conexiones.

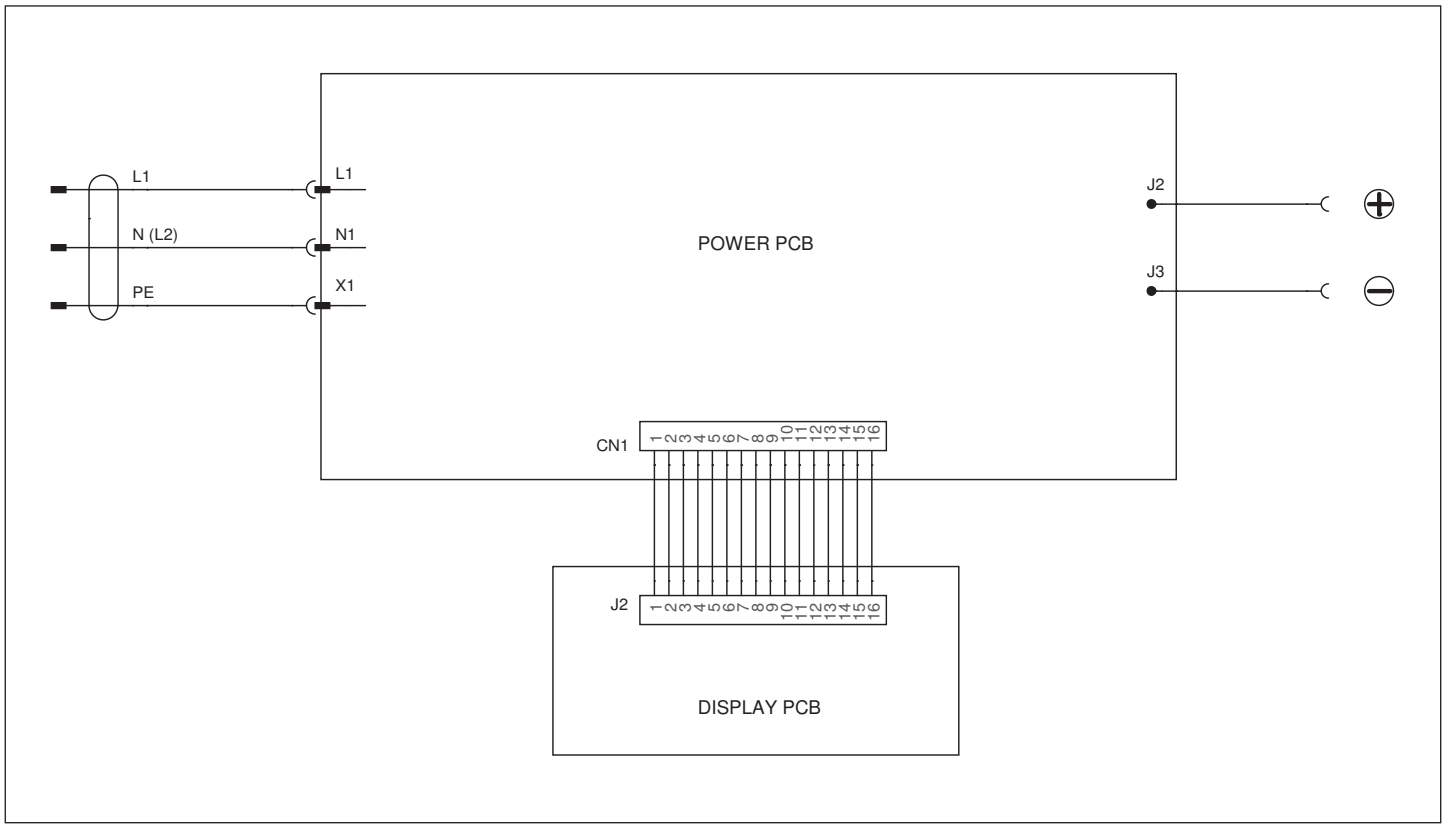

ELENCO PEZZI DI RICAMBIO
LISTE PIECES DETACHEES
SPARE PARTS LIST
ERSATZTEILLISTE
PIEZAS DE REPUESTO

DOCTOR CHARGE 55 CONNECT

Esploso macchina, Dessin appareil, Machine drawing, Explosions Zeichnung des Geräts, Diseño seccionado maquina.

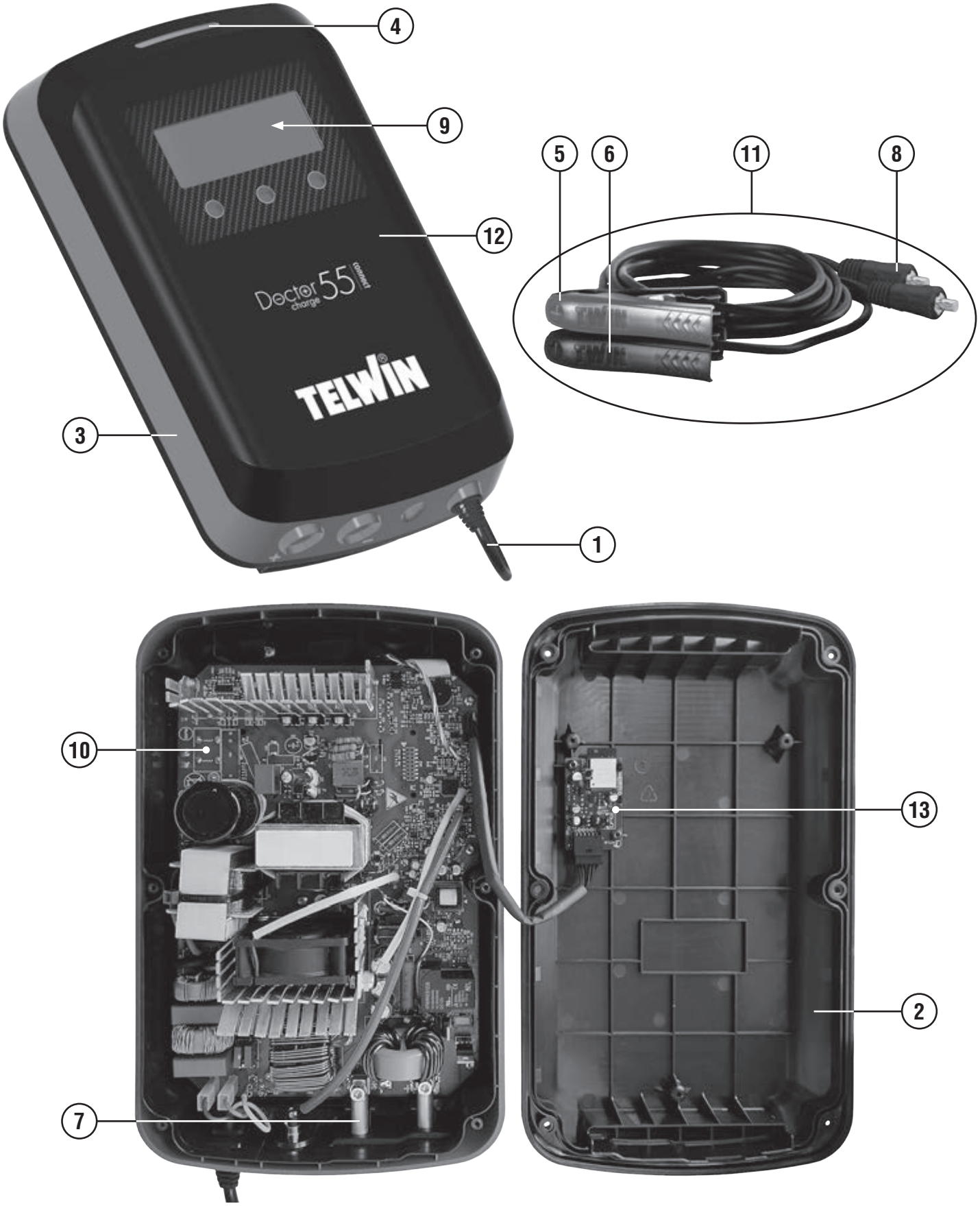

REF.	ELENCO PEZZI DI RICAMBIO PIECES DETACHEES SPARE PARTS LIST ERSATZTEILLISTE PIEZAS DE REPUESTO	CODICE CODE KODE
1	Cavo di alim.H05vv-f 3g00,75 01.50 M Cable de reseau h05vv-f 3g00,75 01.50 M Mains cable h05vv-f 3g00,75 01.50 M Netzkabel h05vv-f 3g00,75 01.50 M Cable aliment.H05vv-f 3g00,75 01.50 M	132473
2	Fondo - nero Chassis - noir Bottom - black Bodenteil - schwarz Fondo - negro	321402
3	Cornice rossa Cadre - rouge Frame - red Rahmen - rot Marco - rojo	321434
4	Guida luce Guide Guide Führung Guia	321440
5	Arizona 70r pinza positivo 70a Arizona 70r pince positiv 70a Arizona 70r positive clamp 70a Arizona 70r positive zange 70a Arizona 70r pinza positivo 70a	712720
6	Arizona 70b pinza di massa 70a Arizona 70b pince de masse 70a Arizona 70b work clamp 70a Arizona 70b masseklemme 70a Arizona 70b pinza de masa 70a	712721
7	Connettore femmina 10 mmq Connecteur femelle 10 mmq Female connector 10 mmq Buchsenverbinder 10 mmq Conector hembra 10 mmq	712749
8	Spina atlas 10mmq Fiche atlas 10mmq Plug atlas 10mmq Stecker atlas 10mmq Enchufe atlas 10mmq	712754
9	Kit assieme display Kit affichage Display kit Tafel kit Kit pantalla	982024
10	Kit scheda carica batteria 40a Kit platine charge batterie 40a Battery charge module kit 40a Batterie-ladekarte kit 40a Kit tarjeta carga batería 40a	982376
11	Kit cavo 6 mmq 2m positivo/negativo Kit cable 6 mmq 2m positif/negatif Kit cable 6 mmq 2m positive/negative Kit kabel 6 mmq 2m plus/minus Kit cable 6 mmq 2m positivo/negativo	982377
12	Kit frontale + etichetta Kit partie frontal + etiquette Front panel kit + label Gerätefront kit + aufkleber Kit frontal + etiqueta	982378
13	Kit assieme scheda bluetooth Kit fiche bluetooth Bluetooth pcb kit Bluetooth karte kit Kit tarjeta bluetooth	982379

Schema elettrico, Schéma électrique, Diagram, Schaltplan, Esquema de conexiones.

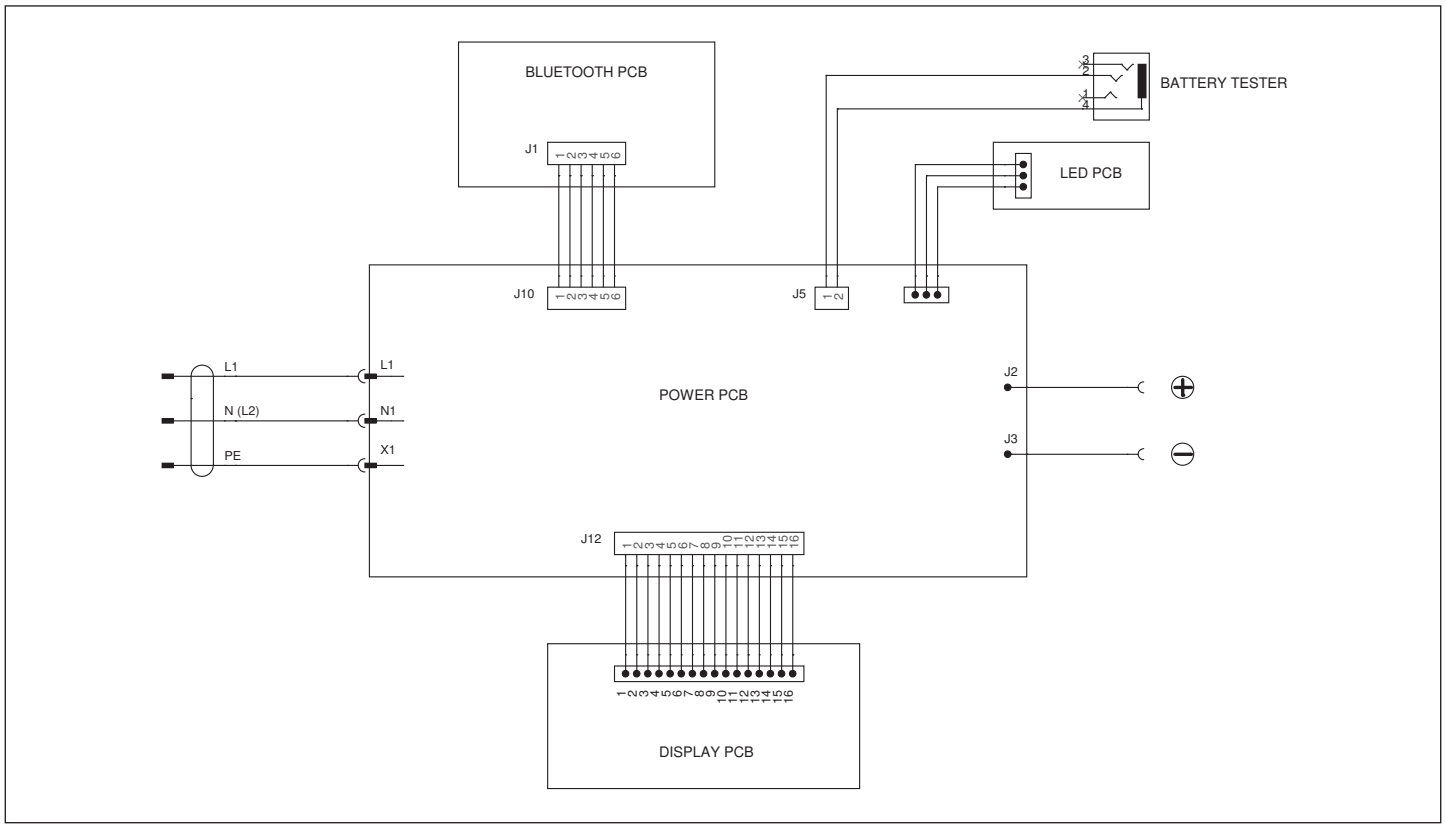

ELENCO PEZZI DI RICAMBIO
LISTE PIECES DETACHEES
SPARE PARTS LIST
ERSATZTEILLISTE
PIEZAS DE REPUESTO

DOCTOR CHARGE 50

Esploso macchina, Dessin appareil, Machine drawing, Explosions Zeichnung des Geräts, Diseño seccionado maquina.





REF.	ELENCO PEZZI DI RICAMBIO PIECES DETACHEES SPARE PARTS LIST ERSATZTEILLISTE PIEZAS DE REPUESTO	CODICE CODE KODE
1	Cavo alim. H05vv-f 3g00.75 L=01.50 Cable alim. H05vv-f 3g00.75 L=01.50 Mains cable h05vv-f 3g00.75 L=01.50 Netzkabel h05vv-f 3g00.75 L=01.50 Cable alim. H05vv-f 3g00.75 L=01.50	132420
2	Guscio destro Coquille droit Right shell Rechte schale Casco derecho	321156
3	Guscio sinistro Coquille gauche Left shell Linke schale Casco izquierdo	321158
4	Arizona 70r pinza positivo 70a Arizona 70r pince positiv 70a Arizona 70r positive clamp 70a Arizona 70r positive zange 70a Arizona 70r pinza positivo 70a	712346
5	Arizona 70b pinza di massa 70a Arizona 70b pince de masse 70a Arizona 70b work clamp 70a Arizona 70b masseklemme 70a Arizona 70b pinza de masa 70a	712347
6	Kit retro Kit partie arriere Back panel kit Rueckseite kit Kit trasera	981743
7	Kit frontale + etichetta Kit partie frontal + etiquette Front panel kit + label Geraetefront kit + kleber Kit frontal + etiqueta	981745
8	Kit assieme display Kit affichage Display kit Tafel kit Kit pantalla	982024
9	Kit scheda carica + pfc Kit module de charge + pfc Charge pcb kit + pfc Aufladesteuerungskit + pfc Kit tarjeta carga + pfc	982011
10	Kit cavi 6 mmq 3m positivo/negativo Kit cables 6 mmq 3m positif/negatif Kit cables 6 mmq 3m positive/negative Kit kabeln 6 mmq 3m plus/minus Kit cables 6 mmq 3m positivo/negativo	981735
11	Kit pressacavo + ghiera Kit presse cable + embout Kit cable bushing + ring nut Kit kabelhalter + nutmutter Kit prensa cable + virola	981456
12	Kit scheda pfc Kit fiche pfc Pfc card kit Pfc karte kit Kit tarjeta pfc	981733
13	Kit connettore maschio Kit connecteur mâle Male connector kit Steckverbinder-kit Kit conector macho	982391
14	Kit connettore femmina Kit connecteur femelle Female connector kit Steckerbuchsen- kit Kit conector hembra	982392

Schema elettrico, Schéma électrique, Diagram, Schaltplan, Esquema de conexiones.

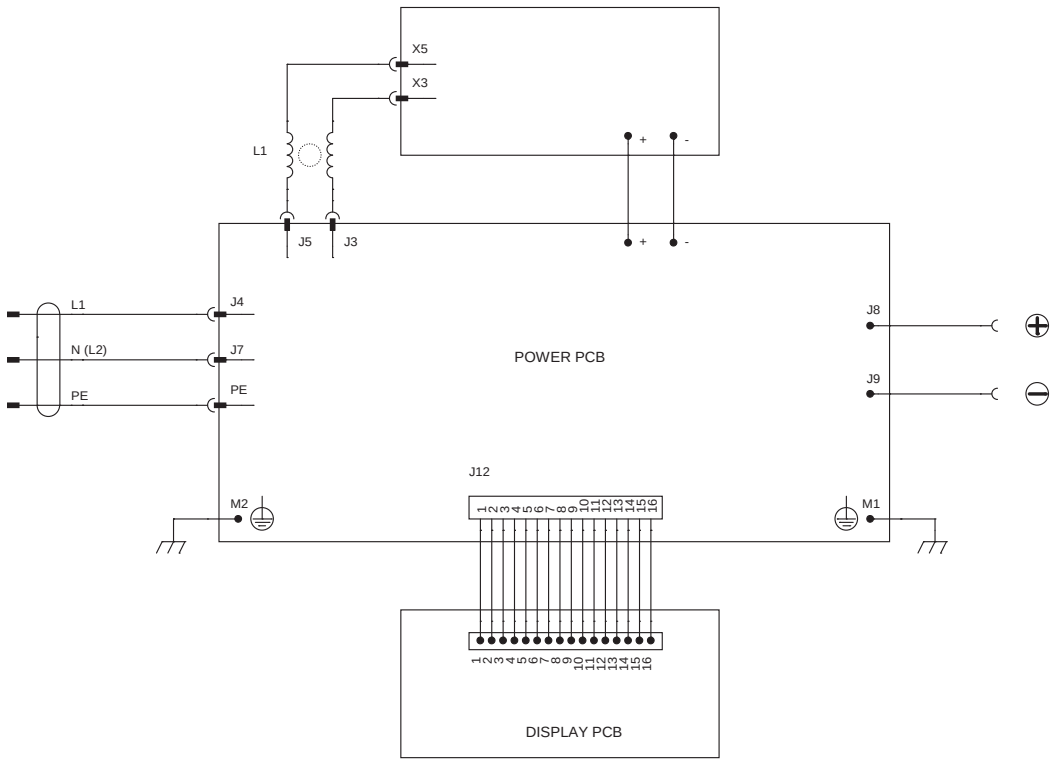

ELENCO PEZZI DI RICAMBIO
LISTE PIECES DETACHEES
SPARE PARTS LIST
ERSATZTEILLISTE
PIEZAS DE REPUESTO

DOCTOR CHARGE 130

Esploso macchina, Dessin appareil, Machine drawing, Explosions Zeichnung des Geräts, Diseño seccionado maquina.

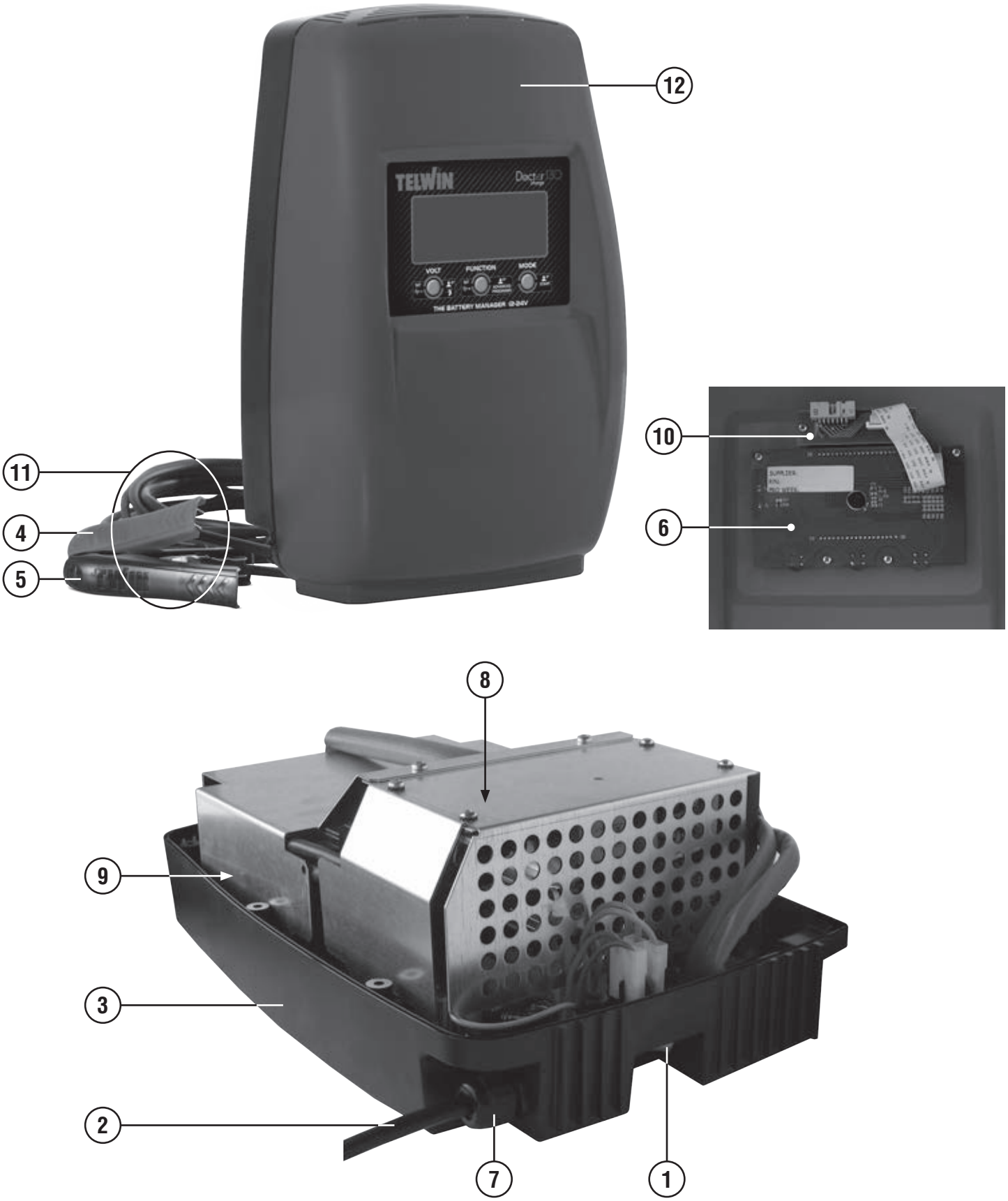

REF.	ELENCO PEZZI DI RICAMBIO PIECES DETACHEES SPARE PARTS LIST ERSATZTEILLISTE PIEZAS DE REPUESTO	CODICE CODE KODE
1	Interruttore Interrupteur Switch Schalter Interruptor	122381
2	Cavo alim. 3g1.5 2 M spina schuko Cable alim. 3g1.5 2 M fiche schuko Mains cable 3g1.5 2 M schuko plug Netzkabel 3g1.5 2 M schuko stecker Cable alim. 3g1.5 2 M espina schuko	132155
3	Retro Partie arriere Back panel Rückseite Trasera	321226
4	Arizona 150r pinza positivo 150a Arizona 150r pince positiv 150a Arizona 150r positive clamp 150a Arizona 150r positive zange 150a Arizona 150r pinza positivo 150a	712368
5	Pinza di carica (-). Pince de charge (-) Charging gun (-) Ladezange (-) Pinzas de carga (-)	712397
6	Kit assieme display Kit affichage Display kit Tafel kit Kit pantalla	982024
7	Kit pressacavo + ghiera Kit presse cable + embout Kit cable bushing + ring nut Kit kabelhalter + nutmutter Kit prensa cable + virola	981801
8	Kit scheda pfc Kit fiche pfc Pfc card kit Pfc karte kit Kit tarjeta pfc	981802
9	Kit scheda carica Kit module de charge Charge pcb kit Aufladesteuerungskit Kit tarjeta carga	982026
10	Kit scheda adattatore Kit platine adapteur Adaptor card kit Adaptorkartekit Kit tarjeta adaptador	981804
11	Kit cavi 10 mmq 3m positivo/negativo Kit cables 10 mmq 3m positif/negatif Kit cables 10 mmq 3m positive/negative Kit kabeln 10 mmq 3m plus/minus Kit cables 10 mmq 3m positivo/negativo	981805
12	Kit frontale + etichetta Kit partie frontal + etiquette Front panel kit + label Geraetefront kit + kleber Kit frontal + etiqueta	981807

Schema elettrico, Schéma électrique, Diagram, Schaltplan, Esquema de conexiones.

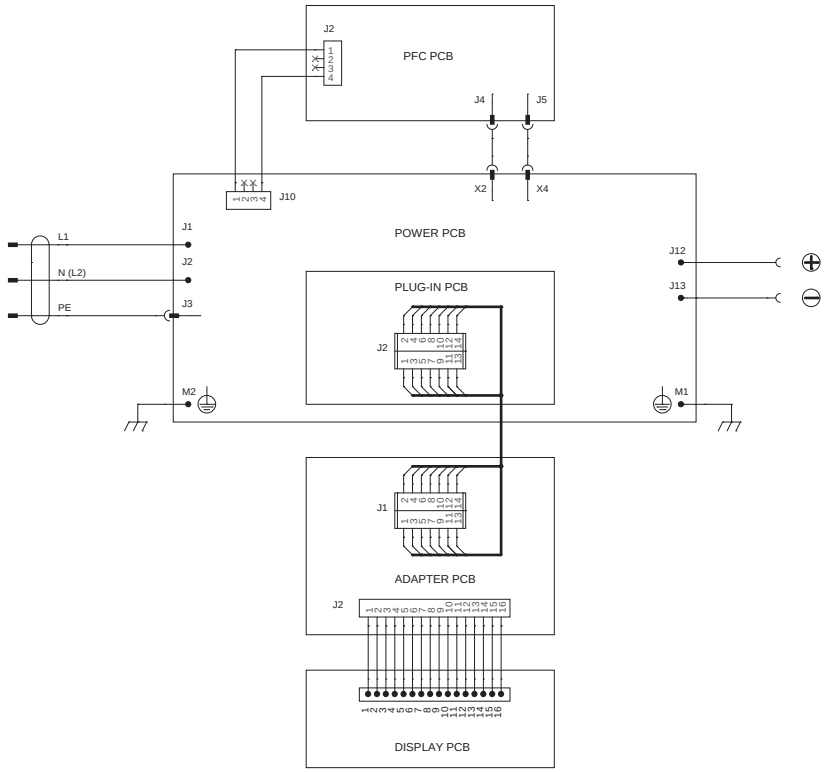

ELENCO PEZZI DI RICAMBIO
LISTE PIECES DETACHEES
SPARE PARTS LIST
ERSATZTEILLISTE
PIEZAS DE REPUESTO

DOCTOR START 330

Esploso macchina, Dessin appareil, Machine drawing, Explosions Zeichnung des Geräts, Diseño seccionado maquina.

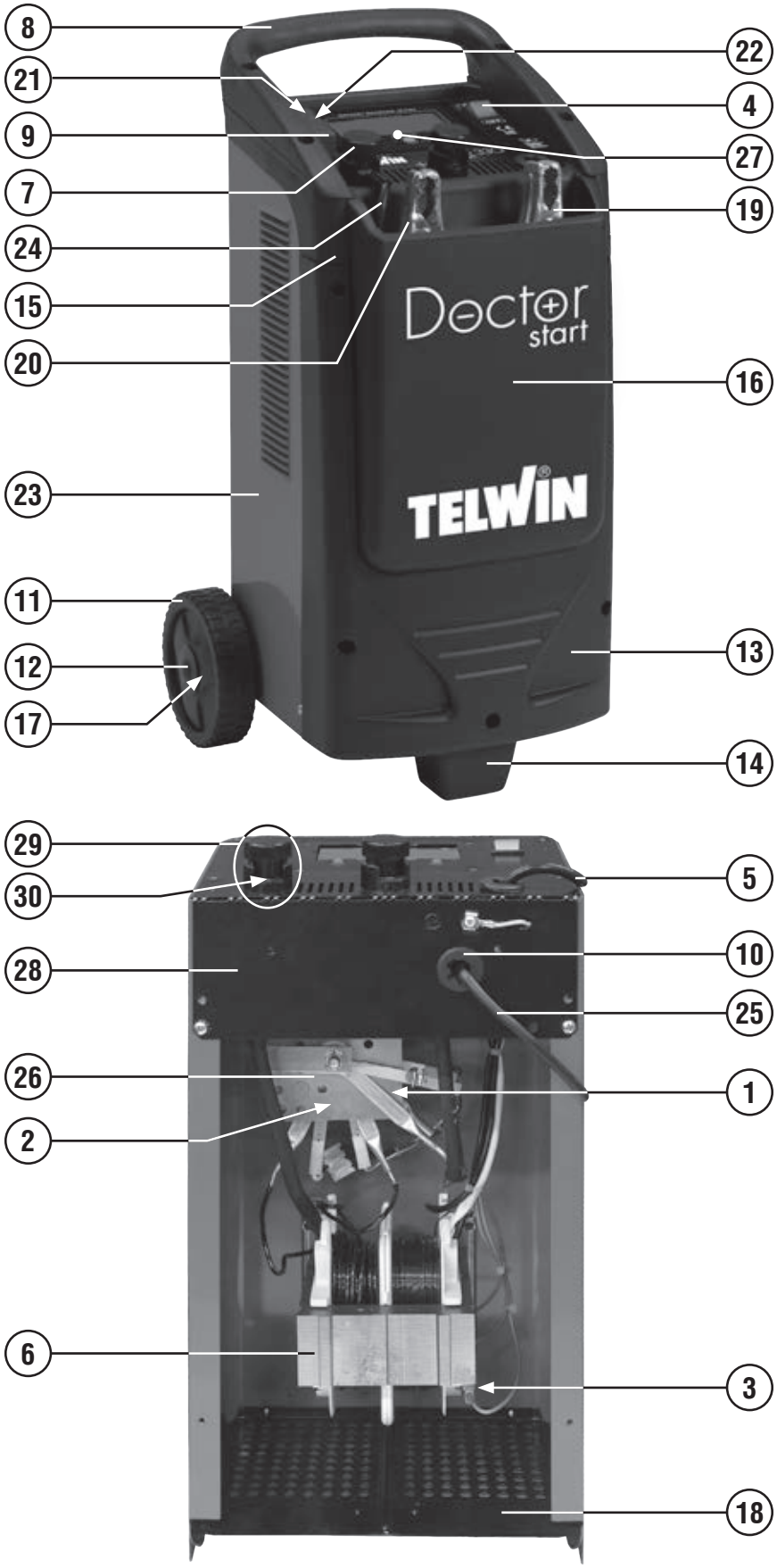

REF.	ELENCO PEZZI DI RICAMBIO PIECES DETACHEES SPARE PARTS LIST ERSATZTEILLISTE PIEZAS DE REPUESTO	CODICE CODE KODE
1	Protezione raddrizzatore Protection redresseur Rectifier protection Gleichrichterschutz Protector rectificador	112185
2	Kit termostato Kit thermostat Kit thermostat Thermostat Kit termostato	982004
3	Termostato Thermostat Thermostat Thermostat Termostato	121714
4	Interruttore Interupteur Switch Schalter Interruptor	122477
5	Cavo alim. 3g1.5 2m spina schuko Cable alim. 3g1.5 2m fiche schuko Mains cable 3g1.5 2m schuko plug Netzkabel 3g1.5 2m schuko stecker Cable alim. 3g1.5 2m espina schuko	132310
6	Trasformatore Transformateur Transformer Transformator Transformador	169540
7	Volantino Volant Handwheel Handrad Volante	312053
8	Manico Poignee Handle Handgriff Manija	312408
9	Cuffia per fusibili Couvre fusibles Fuse cover Kasten fuer sicherungen Cubrefusibile	322051
10	Pressacavo Presse cable Cable bushing Kabelhalter Prensa cable	322112
11	Ruota Roue Wheel Rad Rueda	322193
12	Tappo blocca ruota Bouchon ferme roue Wheel locking ring Radsperrestopfen Tapon de bloqueo rueda	322223

REF.	ELENCO PEZZI DI RICAMBIO PIECES DETACHEES SPARE PARTS LIST ERSATZTEILLISTE PIEZAS DE REPUESTO	CODICE CODE KODE
13	Frontale Partie frontal Front panel Geraetefront Frontal	322801
14	Piedino Embout Foot Fuss Pie	322803
15	Cornice Cadre Frame Rahmen Marco	322804
16	Tasca Poche Pocket Tasche Bolsillo	362057
17	Asse per ruote Axes pour roue Wheels axle Raederachse Eje por rueda	422961
18	Fondalino Chassis Bottom Boden Fondo	644177
19	Colorado 150b pinza di massa 150a Colorado 150b pince de masse 150a Colorado 150b work clamp 150a Colorado 150b masseklemme 150a Colorado 150b pinza de masa 150a	712001
20	Colorado 150r pinza positivo 150a Colorado 150r pince positiv 150a Colorado 150r positive clamp 150a Colorado 150r positive zange 150a Colorado 150r pinza positivo 150a	712002
21	Fusibili lamella 50a 20 pz Fusibles 50a 20 pcs Fuses 50a 20 pcs Sicherungen 50a 20 stk Fusibles 50a 20 pz	802259
22	Morsetto per fusibile Borne pour fusible Fuse holder Sicherungshalter Bocadillo para fusible	980036
23	Kit retro Kit partie arriere Back panel kit Rueckseite kit Kit trasera	980299
24	Cavo 10mmq 2m- positivo Cable 10mmq 2m- positive Cable 10mmq 2m- positive Kabel 10mmq 2m- positive Cable 10mmq 2m- positivo	980317

REF.	ELENCO PEZZI DI RICAMBIO PIECES DETACHEES SPARE PARTS LIST ERSATZTEILLISTE PIEZAS DE REPUESTO	CODICE CODE KODE
25	Cavo 10mmq 2m- massa Cable 10mmq 2m- masse Cable 10mmq 2m- earth Kabel 10mmq 2m- masse Cable 10mmq 2m- mase	980365
26	Kit raddrizzatore Kit redresseur Rectifier kit Gleichrichter kit Kit rectificador	981977
27	Kit scheda potenza + display Kit carte puissance + display Power board kit + display Leistungskartekit + display Kit tarjeta potencia + display	982013
28	Kit cruscotto Kit tableau Dashboard kit Schaltbrett kit Kit cuadro	981904
29	Kit morsetto completo d.33mm Kit borne complete d.33mm Complete terminal kit d.33mm Komplet kabelklemme kit d.33mm Kit borne completo d.33mm	990162
30	Kit coppia rondelle isolanti Kit rondelles isolantes Insulating washers kit Isolierscheibekit Kit arandelas asladoras	990163

Schema elettrico, Schéma électrique, Diagram, Schaltplan, Esquema de conexiones.

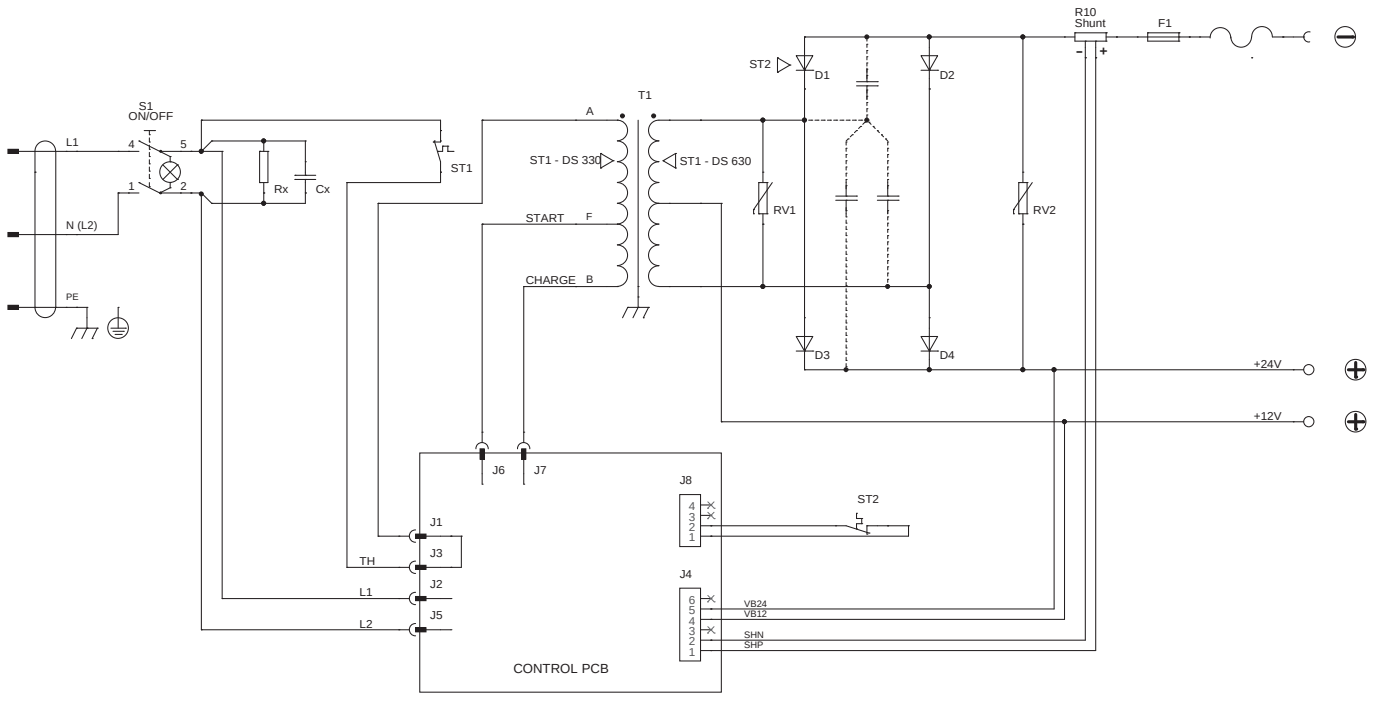

ELENCO PEZZI DI RICAMBIO
LISTE PIECES DETACHEES
SPARE PARTS LIST
ERSATZTEILLISTE
PIEZAS DE REPUESTO

DOCTOR START 530

Esploso macchina, Dessin appareil, Machine drawing, Explosions Zeichnung des Geräts, Diseño seccionado maquina.

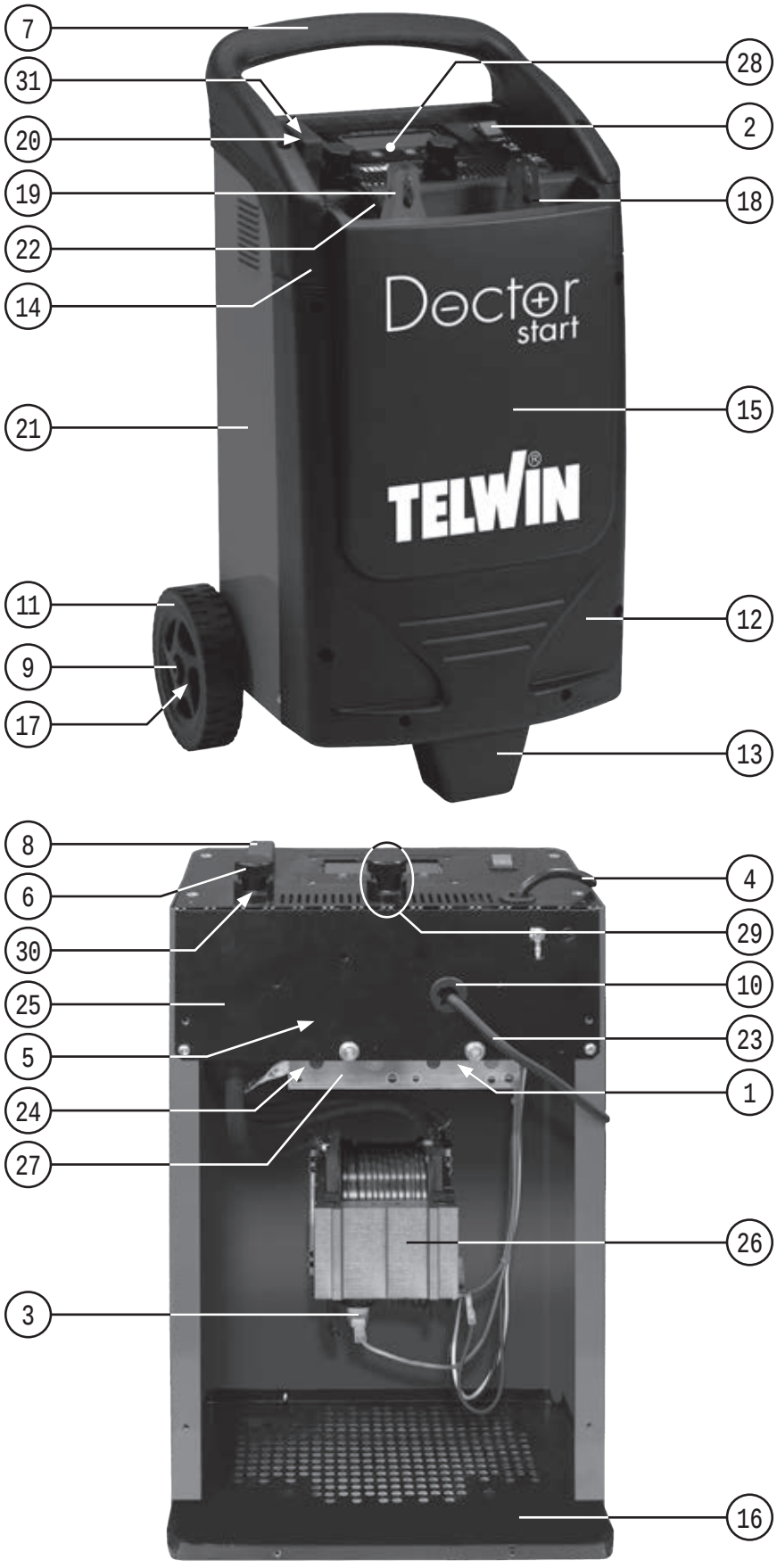

REF.	ELENCO PEZZI DI RICAMBIO PIECES DETACHEES SPARE PARTS LIST ERSATZTEILLISTE PIEZAS DE REPUESTO	CODICE CODE KODE
1	Protezione raddrizzatore Protection redresseur Rectifier protection Gleichrichterschutz Proteccion rectificador	112183
2	Interruttore Interrupteur Switch Schalter Interruptor	121248
3	Termostato Thermostat Thermostat Thermostat Termostato	121717
4	Cavo alim. 3g2.5 2 M spina schuko Cable alim. 3g2.5 2 M fiche schuko Mains cable 3g2.5 2 M schuko plug Netzkabel 3g2.5 2 M schuko stecker Cable alim. 3g2.5 2 M espina schuko	132009
5	Shunt Shunt Shunt Shunt Shunt	152017
6	Volantino Volant Handwheel Handrad Volante	312053
7	Manico Poignee Handle Handgriff Manija	312399
8	Cuffia per fusibili Couvre fusibles Fuse cover Kasten fuer sicherungen Cubrefusibile	322051
9	Tappo blocca ruote Bouchon ferme roue Wheel locking ring Radsperrestopfen Tapon de bloqueo rueda	322102
10	Pressacavo Presse cable Cable bushing Kabelhalter Prensa cable	322112
11	Ruota fissa Roue fixe Fixed wheel Fixes rad Rueda firme	322201
12	Frontale Partie frontal Front panel Geraetefront Frontal	322796
13	Piedino Embout Foot Fuss Pie	322798
14	Cornice Cadre Frame Rahmen Marco	322799
15	Tasca Poche Pocket Tasche Bolsillo	362058
16	Fondo Chassis Bottom Bodenteil Fondo	644783
17	Asse per ruote Axe roues Wheels axle Radachse Eje ruedas	681055
18	Colorado 150b pinza di massa 150a Colorado 150b pince de masse 150a Colorado 150b work clamp 150a Colorado 150b masseklemme 150a Colorado 150b pinza de masa 150a	712001
19	Colorado 150r pinza positivo 150a Colorado 150r pince positiv 150a Colorado 150r positive clamp 150a Colorado 150r positive zange 150a Colorado 150r pinza positivo 150a	712002
20	Fusibili lamella 80a 20 pz Fusibles 80a 20 pcs Fuses 80a 20 pcs Sicherungen 80a 20 stk Fusibles 80a 20 pz	802260
21	Kit retro Kit partie arriere Back panel kit Rueckseite kit Kit trasera	980302
22	Cavo 16mmq 2m- positivo Cable 16mmq 2m- positive Cable 16mmq 2m- positive Kabel 16mmq 2m- positive Cable 16mmq 2m- positivo	980318
23	Kit cavo 16mmq 2m Kit cable 16mmq 2m Cable kit 16mmq 2m Kabel kit 16mmq 2m Kit cable 16mmq 2m	981575
24	Kit termostato Kit thermostat Kit thermostat Thermostat Kit termostato	982004
25	Kit cruscotto Kit tableau Dashboard kit Schaltbrett kit Kit cuadro	982362
26	Kit trasformatore Kit trasformateur Transformer kit Trafokit Kit transformador	982363
27	Kit raddrizzatore Kit redresseur Rectifier kit Gleichrichter kit Kit rectificador	982364
28	Kit scheda potenza + display Kit carte puissance + display Power board kit + display Leistungskarteki + displayt Kit tarjeta potencia + display	982365
29	Kit morsetto completo d.33mm Kit borne complete d.33mm Complete terminal kit d.33mm Komplet kabelklemme kit d.33mm Kit borne completo d.33mm	990162
30	Kit coppia rondelle isolanti Kit rondelles isolantes Insulating washers kit Isolierscheibekit Kit arandelas asladoras	990163
31	Kit morsetto per fusibile Kit borne pour fuse Fuse clamp kit Sicherungsklemme kit Kit borne fusible	990595

Schema elettrico, Schéma électrique, Diagram, Schaltplan, Esquema de conexiones.

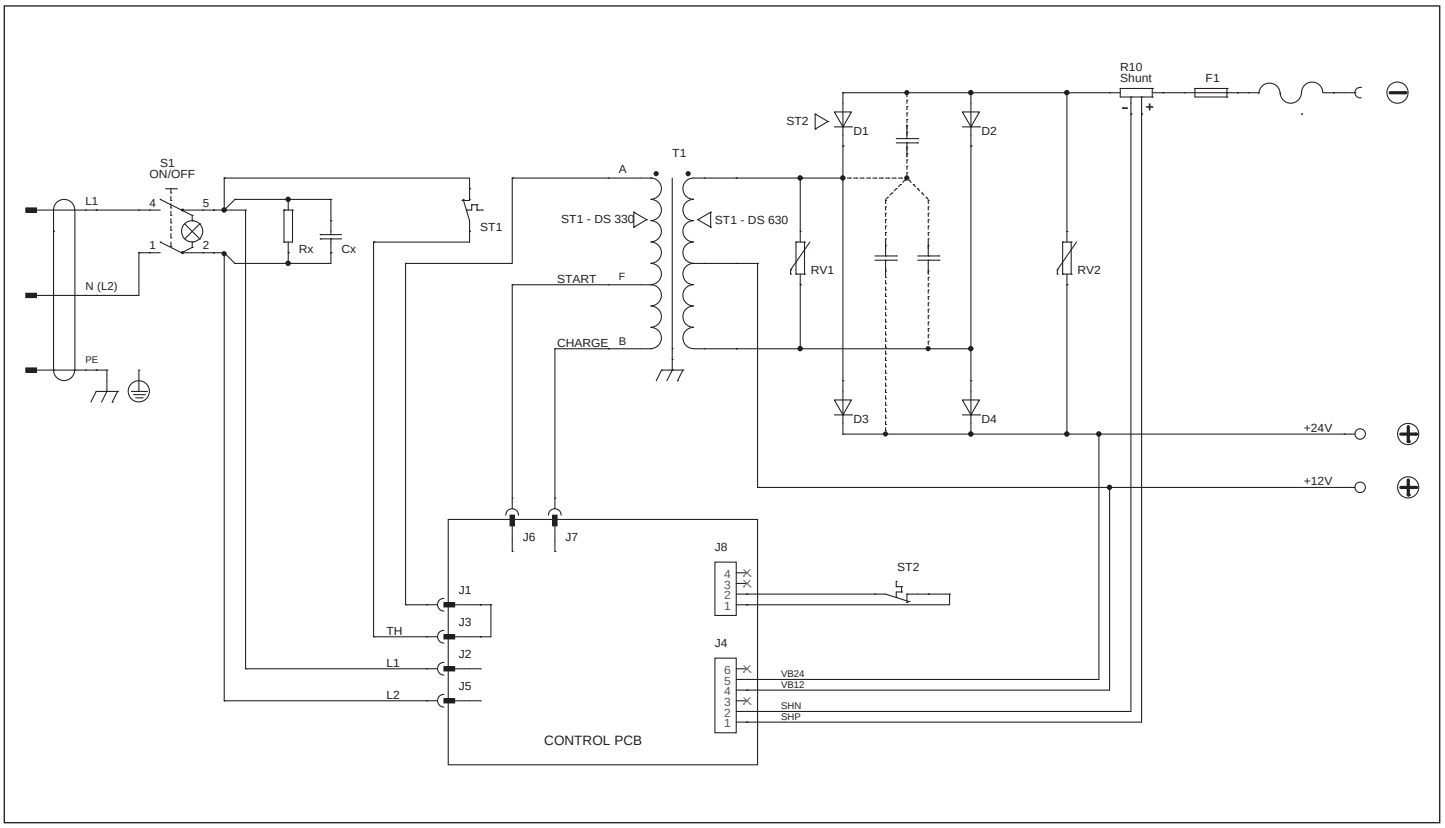

ELENCO PEZZI DI RICAMBIO
LISTE PIECES DETACHEES
SPARE PARTS LIST
ERSATZTEILLISTE
PIEZAS DE REPUESTO

DOCTOR START 630

Esploso macchina, Dessin appareil, Machine drawing, Explosions Zeichnung des Geräts, Diseño seccionado maquina.

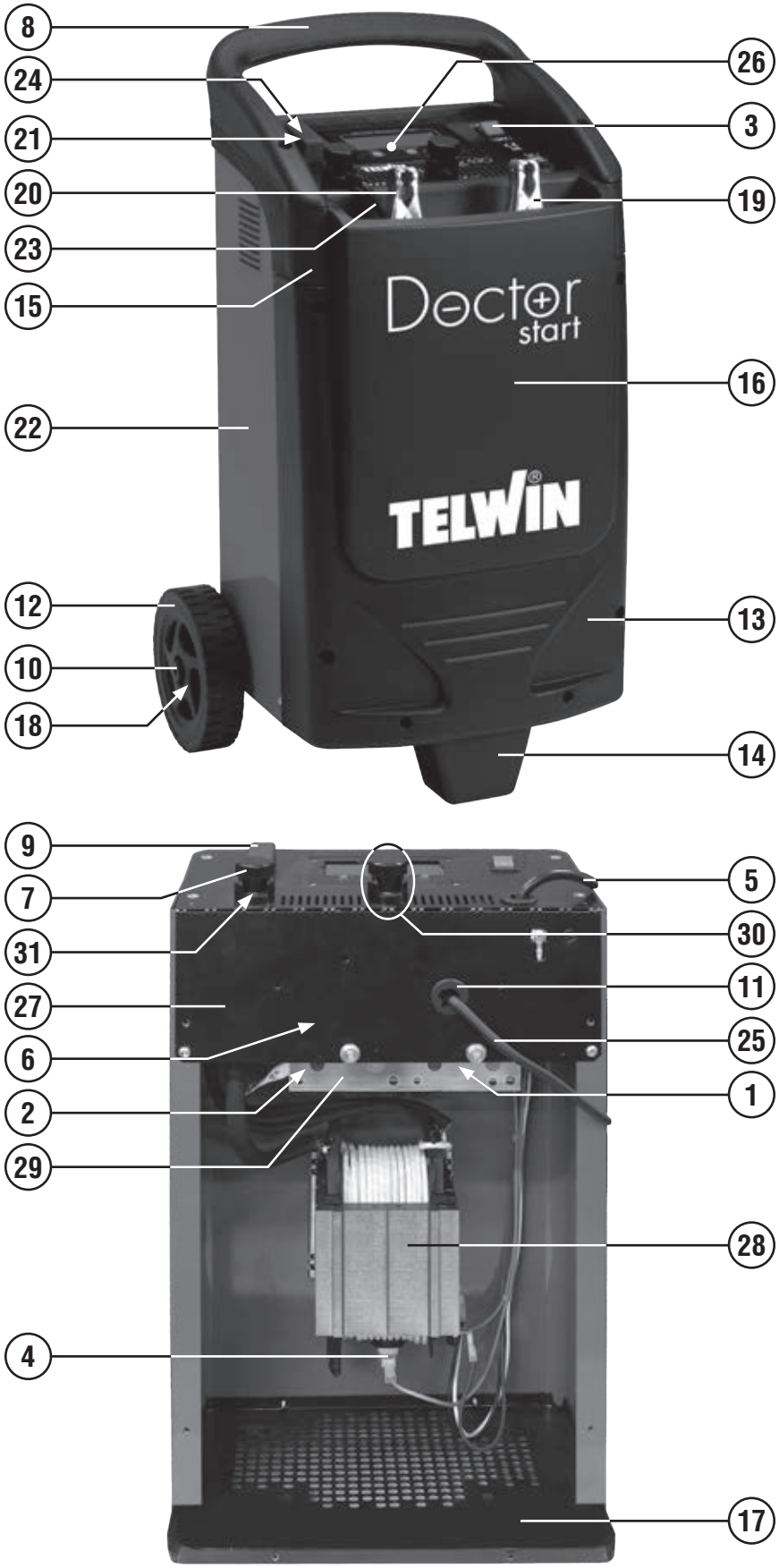

REF.	ELENCO PEZZI DI RICAMBIO PIECES DETACHEES SPARE PARTS LIST ERSATZTEILLISTE PIEZAS DE REPUESTO	CODICE CODE KODE
1	Protezione raddrizzatore Protection redresseur Rectifier protection Gleichrichterschutz Proteccion rectificador	112183
2	Kit termostato Kit thermostat Kit thermostat Thermostat Kit termostato	982004
3	Interruttore Interrupteur Switch Schalter Interruptor	121248
4	Termostato Thermostat Thermostat Thermostat Termostato	121716
5	Cavo alim. 3g2.5 2 M Cable alim. 3g2.5 2 M Mains cable 3g2.5 2 M Netzkabel 3g2.5 2 M Cable alim. 3g2.5 2 M	132193
6	Shunt Shunt Shunt Shunt Shunt	152017
7	Volantino Volant Handwheel Handrad Volante	312053
8	Manico Poignee Handle Handgriff Manija	312399
9	Cuffia per fusibili Couvre fusibles Fuse cover Kasten fuer sicherungen Cubrefusibile	322051
10	Tappo blocca ruote Bouchon ferme roue Wheel locking ring Radsperrestopfen Tapon de bloqueo rueda	322102
11	Pressacavo Presse cable Cable bushing Kabelhalter Prensa cable	322112
12	Ruota fissa Roue fixe Fixed wheel Fixes rad Rueda firme	322201

REF.	ELENCO PEZZI DI RICAMBIO PIECES DETACHEES SPARE PARTS LIST ERSATZTEILLISTE PIEZAS DE REPUESTO	CODICE CODE KODE
13	Frontale Partie frontal Front panel Geraetefront Frontal	322796
14	Piedino Embout Foot Fuss Pie	322798
15	Cornice Cadre Frame Rahmen Marco	322799
16	Tasca Poche Pocket Tasche Bolsillo	362058
17	Fondo Chassis Bottom Bodenteil Fondo	644783
18	Asse per ruote Axe roues Wheels axle Radachse Eje ruedas	681055
19	Colorado 150b pinza di massa 150a Colorado 150b pince de masse 150a Colorado 150b work clamp 150a Colorado 150b masseklemme 150a Colorado 150b pinza de masa 150a	712001
20	Colorado 150r pinza positivo 150a Colorado 150r pince positiv 150a Colorado 150r positive clamp 150a Colorado 150r positive zange 150a Colorado 150r pinza positivo 150a	712002
21	Fusibili lamella 100a 20 pz Fusibles 100a 20 pcs Fuses 100a 20 pcs Sicherungen 100a 20 stk Fusibles 100a 20 pz	802029
22	Kit retro Kit partie arriere Back panel kit Rueckseite kit Kit trasera	980302
23	Cavo 16mmq 2m- positivo Cable 16mmq 2m- positive Cable 16mmq 2m- positive Kabel 16mmq 2m- positive Cable 16mmq 2m- positivo	980318
24	Kit morsetto per fusibile Kit borne pour fuse Fuse clamp kit Sicherungsklemme kit Kit borne fusible	990595

REF.	ELENCO PEZZI DI RICAMBIO PIECES DETACHEES SPARE PARTS LIST ERSATZTEILLISTE PIEZAS DE REPUESTO	CODICE CODE KODE
25	Kit cavo 16mmq 2m Kit cable 16mmq 2m Cable kit 16mmq 2m Kabel kit 16mmq 2m Kit cable 16mmq 2m	981575
26	Kit scheda potenza + display Kit carte puissance + display Power board kit + display Leistungskarteki + displayt Kit tarjeta potencia + display	982014
27	Kit cruscotto Kit tableau Dashboard kit Schaltbrett kit Kit cuadro	981905
28	Kit trasformatore Kit transformateur Transformer kit Kit transformator Kit transformador	981906
29	Kit raddrizzatore Kit redreesseur Rectifier kit Gleichrichter kit Kit rectificador	981909
30	Kit morsetto completo d.33mm Kit borne complete d.33mm Complete terminal kit d.33mm Komplet kabelklemme kit d.33mm Kit borne completo d.33mm	990162
31	Kit coppia rondelle isolanti Kit rondelles isolantes Insulating washers kit Isolierscheibekit Kit arandelas asladoras	990163

Schema elettrico, Schéma électrique, Diagram, Schaltplan, Esquema de conexiones.

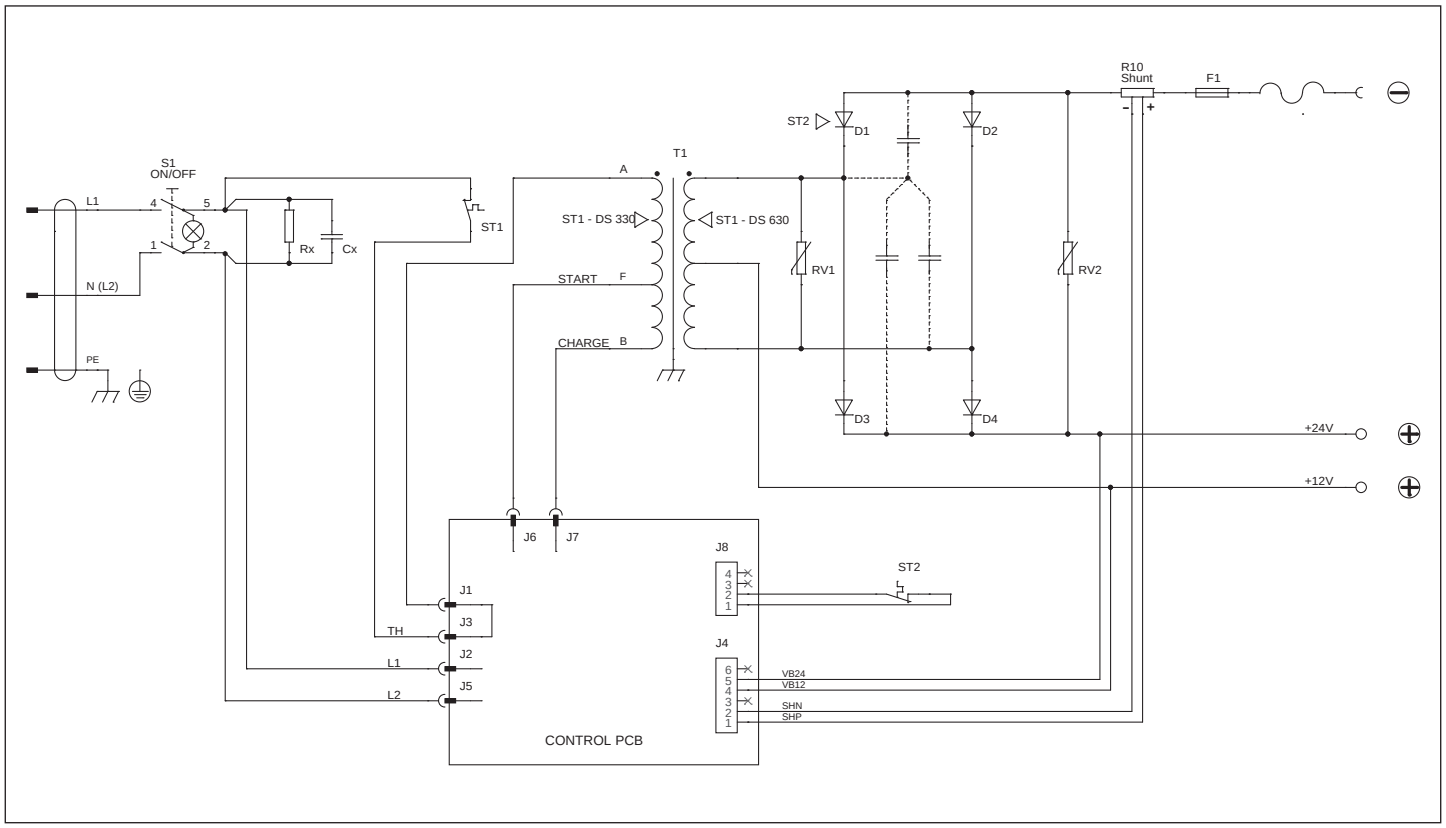

ELENCO PEZZI DI RICAMBIO
LISTE PIECES DETACHEES
SPARE PARTS LIST
ERSATZTEILLISTE
PIEZAS DE REPUESTO

AUTOTRONIC 25 BOOST

TELWIN®

Esploso macchina, Dessin appareil, Machine drawing, Explosions Zeichnung des Geräts, Diseño seccionado maquina.

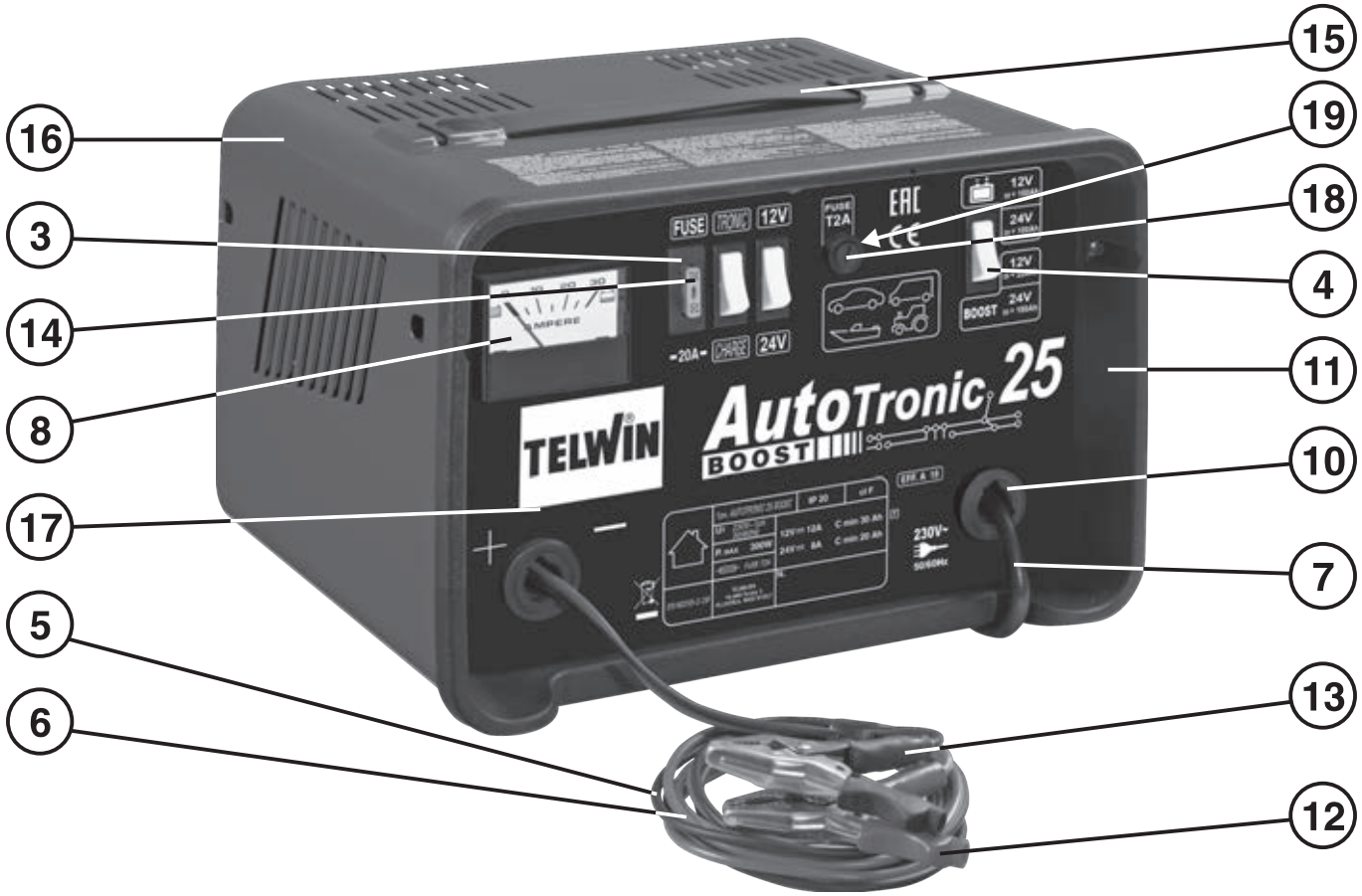

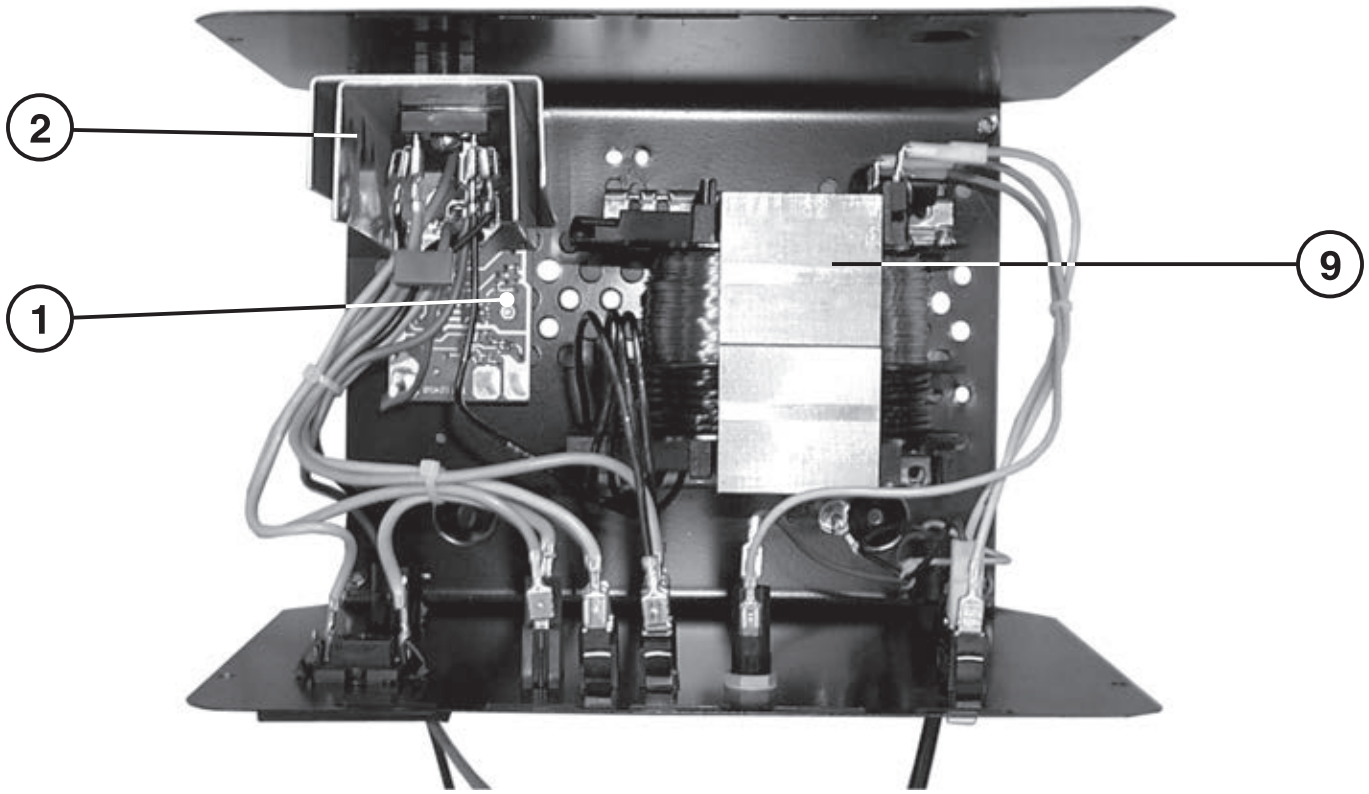

REF.	ELENCO PEZZI DI RICAMBIO PIECES DETACHEES SPARE PARTS LIST ERSATZTEILLISTE PIEZAS DE REPUESTO	CODICE CODE KODE
1	Kit scheda tampone Kit module buffer Buffer pcb kit Pufferssteuerungskit Kit tarjeta tampon	980730
2	Ponte monofase 35a 800v Pont monophase 35a 800v Single phase bridge 35a 800v Einfasige brücke 35a 800v Puente monofasico 35a 800v	116346
3	Kit portafusibile Kit portefusible Fuseholder kit Sicherungshalter kit Kit porte fusible	990352
4	Deviatore Gareur Switch Schalter Interruptor	122400
5	Cavo di massa 2,5 mmq 1,5 m Cable de masse 2,5 mmq 1,5 m Work cable 2,5 mmq 1,5 m Massekabel 2,5 mmq 1,5 m Cable de masa 2,5 mmq 1,5 m	123985
6	Cavo positivo 2,5 mmq 1,5 m Cable positive 2,5 mmq 1,5 m Positive cable 2,5 mmq 1,5 m Kabel positive 2,5 mmq 1,5 m Cable positivo 2,5 mmq 1,5 m	123986
7	Cavo alim. 3g0.75 1.5m spina schuko Cable al. 3g0.75 1.5m fiche schuko Mains cable 3g0.75 1.5m schuko plug Netzkabel 3g0.75 1.5m schuko steck. Cable alim. 3g0.75 1.5m esp. Schuko	132085
8	Kit amperometro Kit amperemetre Kit ammeter Kit amperemeter Kit amperimetro	981782
9	Trasformatore Transformateur Transformer Transformator Transformador	169563
10	Pressacavo Prensecable Cable bushing Kabelhalter Prensacabel	322138
11	Cornice Cadre Frame Rahmen Marco	322665
12	Colorado 40r pinza positivo 40a Colorado 40r pince positiv 40a Colorado 40r positive clamp 40a Colorado 40r positive zange 40a Colorado 40r pinza positivo 40a	712623
13	Colorado 40b pinza di massa 40a Colorado 40b pince de masse 40a Colorado 40b work clamp 40a Colorado 40b masseklemme 40a Colorado 40b pinza de masa 40a	712624
14	Fusibili 20a 10 pz Fusibles 20a 10 pcs Fuses 20a 10 pcs Sicherungen 20a 10 stk Fusibles 20a 10 pz	802257
15	Kit maniglia Kit poignee Kit handle Kit handgriff Kit manija	990340
16	Kit mantello Kit capot Cover kit Deckel kit Kit panel de cobertura	990939
17	Kit frontale Kit partie frontal Front panel kit Gerätefront kit Kit frontal	981888
18	Portafusibile Porte fusible Fuse holder Sicherungshalter Porta fusible	122159
19	Fusibile Fusible Fuse Sicherung Fusible	122437

Schema elettrico, Schéma électrique, Diagram, Schaltplan, Esquema de conexiones.

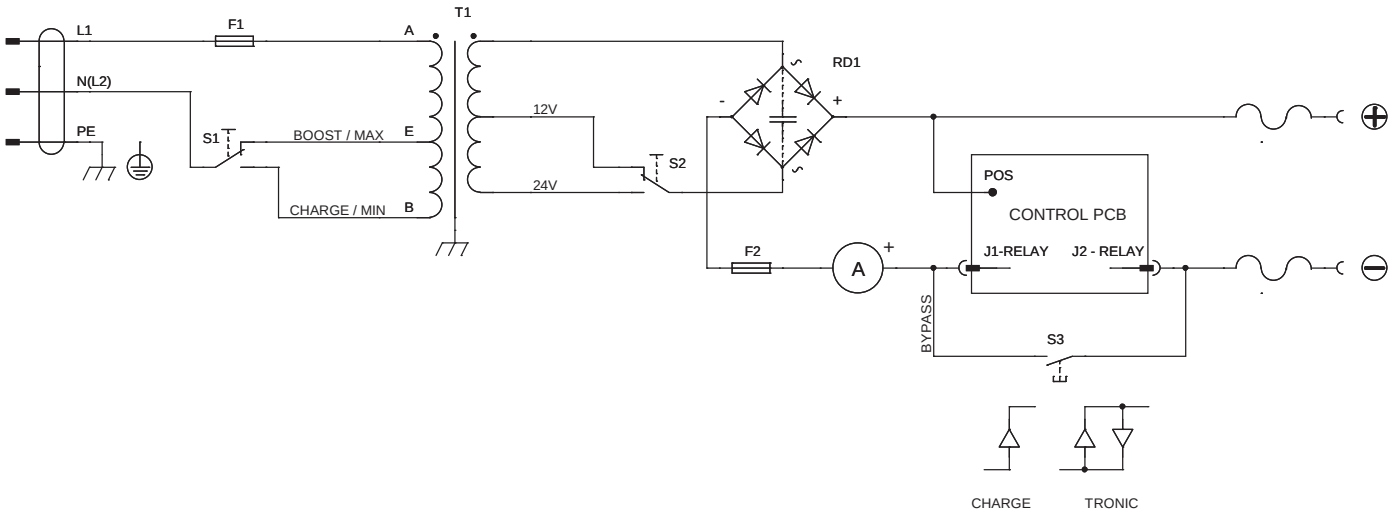

ELENCO PEZZI DI RICAMBIO
LISTE PIECES DETACHEES
SPARE PARTS LIST
ERSATZTEILLISTE
PIEZAS DE REPUESTO

NEVADA 10
NEVADA 15

TELWIN

Esploso macchina, Dessin appareil, Machine drawing, Explosions Zeichnung des Geräts, Diseño seccionado maquina.

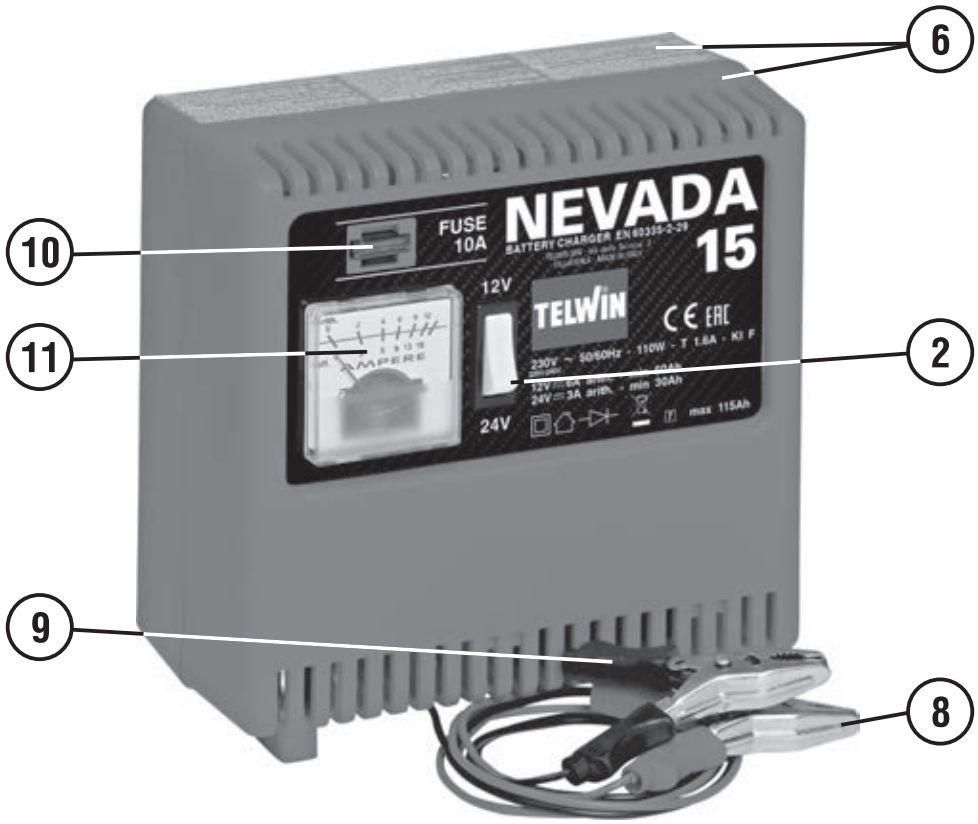

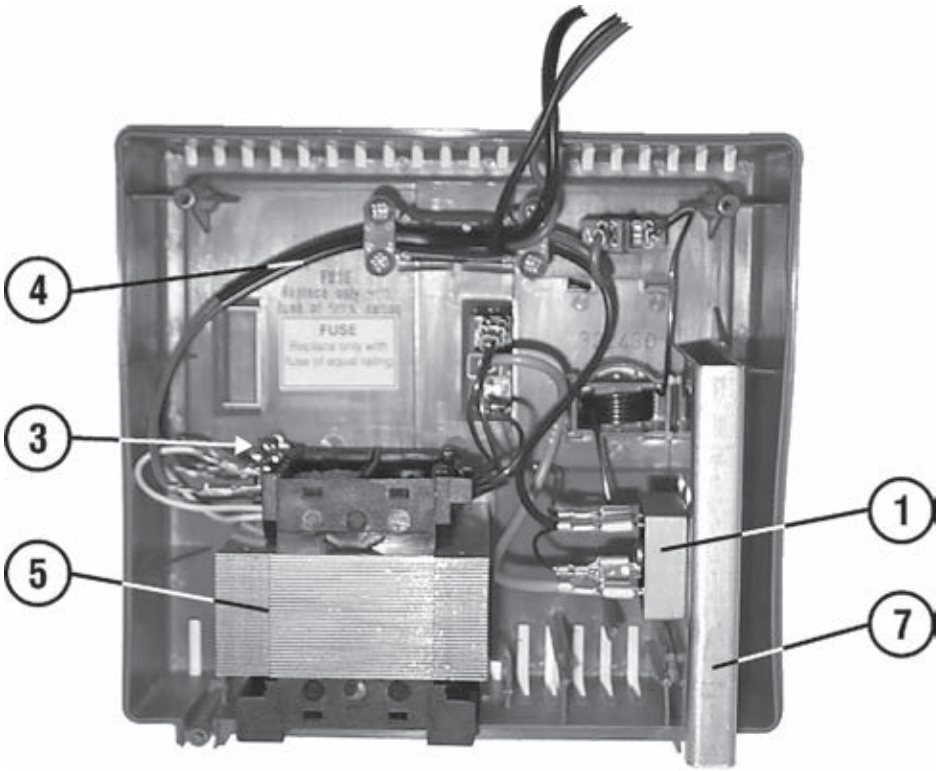

REF.	ELENCO PEZZI DI RICAMBIO PIECES DETACHEES SPARE PARTS LIST ERSATZTEILLISTE PIEZAS DE REPUESTO						NEVADA 10	NEVADA 15
		CODICE		CODE			KODE	
1	Raddrizzatore Redresseur Rectifier Gleichrichter Rectificador						112318	112318
2	Deviatore Gareur Switch Schalter Interruptor						------	122400
3	Fusibile 1a Fusible 1a Fuse 1a Sicherung 1a Fusible 1a						122760	122879
4	Cavo alim. 2x0.75 1 M spina i Cable alim. 2x0.75 1 M fiche i Mains cable 2x0.75 1 M i plug Netzkabel 2x0.75 1 M i stecker Cable alim. 2x0.75 1 M espina i						132047	132047
5	Trasformatore 230v Transformateur 230v Transformer 230v Transformator 230v Transformador 230v						164176	164170
6	Kit gusci Kit calotte Cap kit Kasten kit Kit casquete						322430	322430
7	Radiatore doppio Radiateur double Double radiator Doppel radiator Radiator doble						------	432119
8	Colorado 40r pinza positivo 40a Colorado 40r pince positiv 40a Colorado 40r positive clamp 40a Colorado 40r positive zange 40a Colorado 40r pinza positivo 40a						712623	712623
9	Colorado 40b pinza di massa 40a Colorado 40b pince de masse 40a Colorado 40b work clamp 40a Colorado 40b masseklemme 40a Colorado 40b pinza de masa 40a						712624	712624
10	Fusibili 15a 10 pz Fusibles 15a 10 pcs Fuses 15a 10 pcs Sicherungen 15a 10 stk Fusibles 15a 10 pz						802265	802255
11	Kit amperometro Kit amperemetre Kit ammeter Kit amperemeter Kit amperimetro						990461	990460

Schema elettrico, Schéma électrique, Diagram, Schaltplan, Esquema de conexiones.

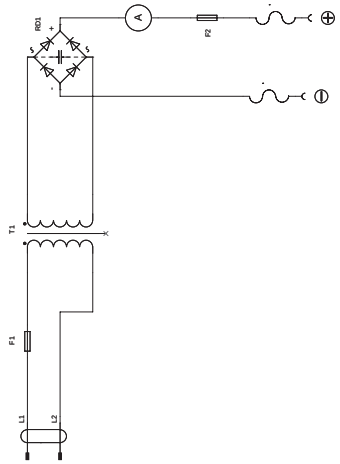

NEVADA 10

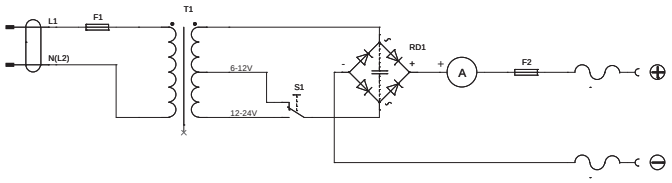

NEVADA 15

ELENCO PEZZI DI RICAMBIO
LISTE PIECES DETACHEES
SPARE PARTS LIST
ERSATZTEILLISTE
PIEZAS DE REPUESTO

ALPINE 15

TELWIN®

Esploso macchina, Dessin appareil, Machine drawing, Explosions Zeichnung des Geräts, Diseño seccionado maquina.

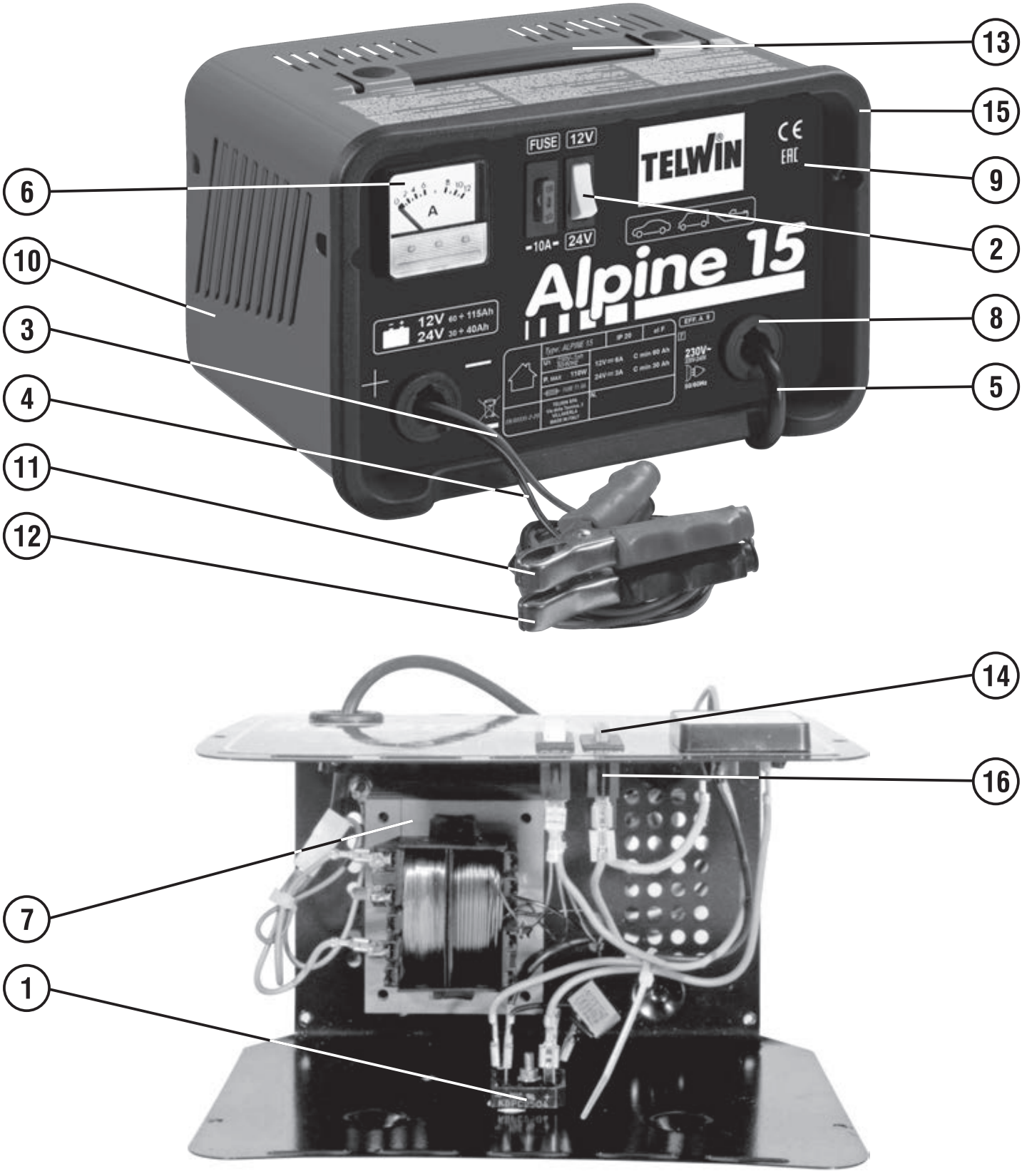

REF.	ELENCO PEZZI DI RICAMBIO PIECES DETACHEES SPARE PARTS LIST ERSATZTEILLISTE PIEZAS DE REPUESTO	CODICE CODE KODE
1	Raddrizzatore Redresseur Rectifier Gleichrichter Rectificador	112318
2	Deviatore Gareur Switch Schalter Interruptor	122400
3	Cavo positivo 1,5 mmq 1 m Cable positive 1,5 mmq 1 m Positive cable 1,5 mmq 1 m Kabel positive 1,5 mmq 1 m Cable positivo 1,5 mmq 1 m	123555
4	Cavo di massa 1,5 mmq 1 m Cable de masse 1,5 mmq 1 m Work cable 1,5 mmq 1 m Massekabel 1,5 mmq 1 m Cable de masa 1,5 mmq 1 m	123556
5	Cavo alim. 3g0.75 1.5m spina schuko Cable al. 3g0.75 1.5m fiche schuko Mains cable 3g0.75 1.5m schuko plug Netzkabel 3g0.75 1.5m schuko steck. Cable alim. 3g0.75 1.5m esp. Schuko	132085
6	Kit amperometro Kit amperemetre Kit ammeter Kit amperemeter Kit amperimetro	981781
7	Trasformatore Transformateur Transformer Transformator Transformador	164170
8	Pressacavo Prensecable Cable bushing Kabelhalter Prensacabel	322138
9	Kit frontale Kit partie frontal Front panel kit Gerätefront kit Kit frontal	981891
10	Kit mantello Kit capot Cover kit Deckel kit Kit panel de cobertura	990934
11	Colorado 40r pinza positivo 40a Colorado 40r pince positiv 40a Colorado 40r positive clamp 40a Colorado 40r positive zange 40a Colorado 40r pinza positivo 40a	712623
12	Colorado 40b pinza di massa 40a Colorado 40b pince de masse 40a Colorado 40b work clamp 40a Colorado 40b masseklemme 40a Colorado 40b pinza de masa 40a	712624
13	Kit maniglia Kit poignee Kit handle Kit handgriff Kit manija	990339
14	Fusibili 15a 10 pz Fusibles 15a 10 pcs Fuses 15a 10 pcs Sicherungen 15a 10 stk Fusibles 15a 10 pz	802256
15	Cornice Cadre Frame Rahmen Marco	322664
16	Kit portafusibile Kit portefusible Fuseholder kit Sicherungshalter kit Kit porte fusible	990352

Schema elettrico, Schéma électrique, Diagram, Schaltplan, Esquema de conexiones.

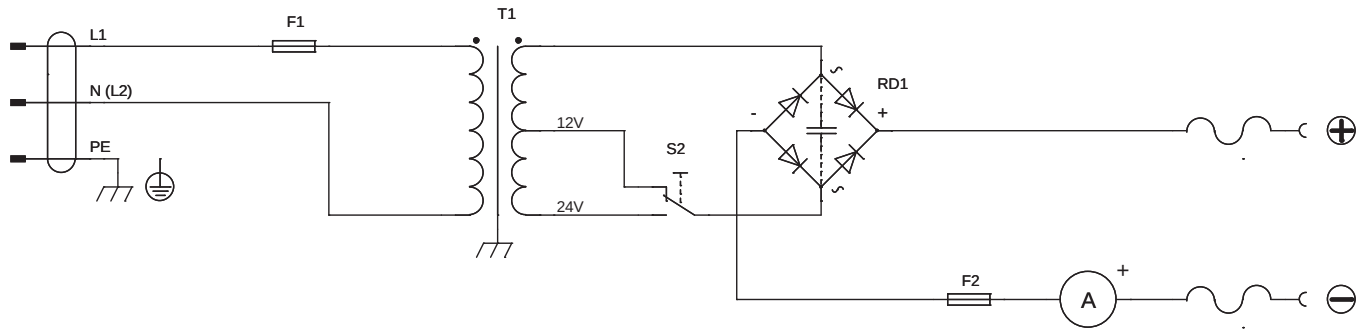

ELENCO PEZZI DI RICAMBIO
LISTE PIECES DETACHEES
SPARE PARTS LIST
ERSATZTEILLISTE
PIEZAS DE REPUESTO

ALPINE 18 BOOST

Esploso macchina, Dessin appareil, Machine drawing, Explosions Zeichnung des Geräts, Diseño seccionado maquina.



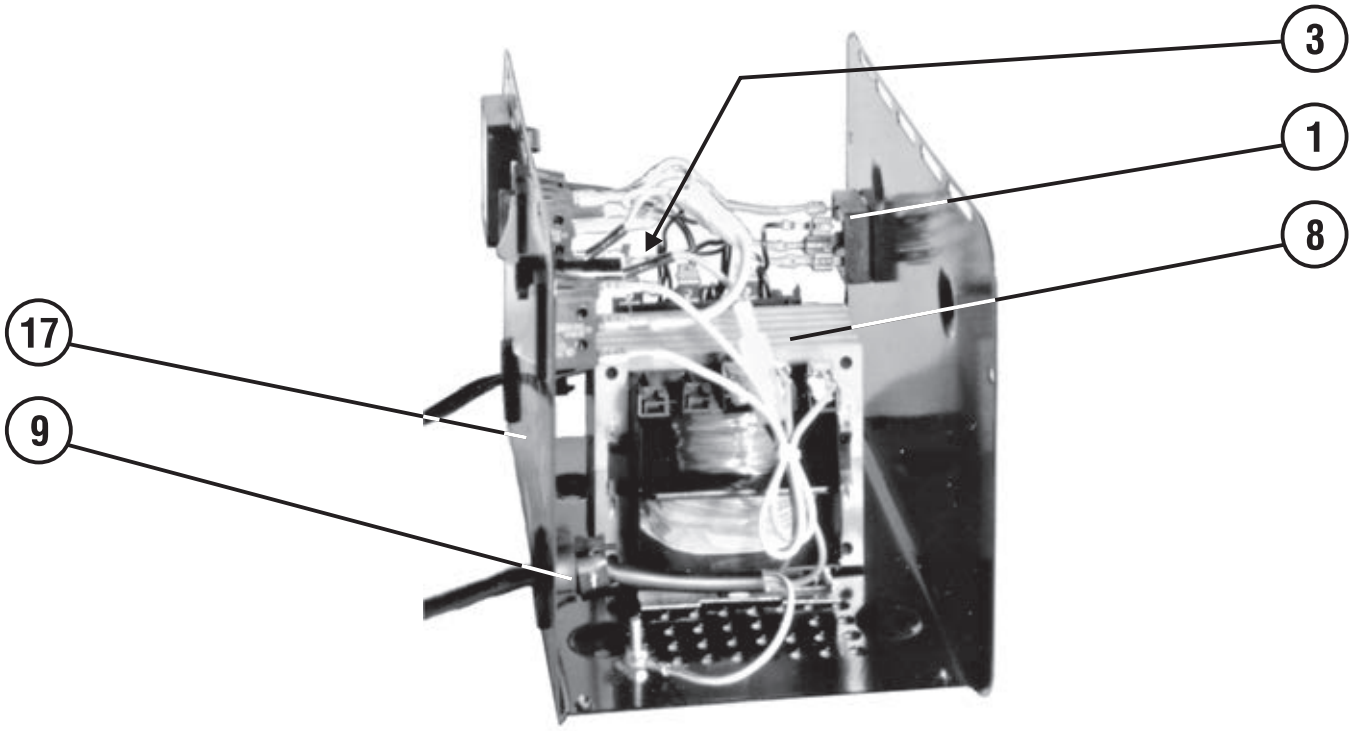

REF.	ELENCO PEZZI DI RICAMBIO PIECES DETACHEES SPARE PARTS LIST ERSATZTEILLISTE PIEZAS DE REPUESTO	CODICE CODE KODE
1	Raddrizzatore Redresseur Rectifier Gleichrichter Rectificador	112318
2	Deviatore Gareur Switch Schalter Interruptor	122400
3	Termostato Thermostat Thermostat Thermostat Termostato	120877
4	Cavo positivo 1,5 mmq 1 m Cable positive 1,5 mmq 1 m Positive cable 1,5 mmq 1 m Kabel positive 1,5 mmq 1 m Cable positivo 1,5 mmq 1 m	123555
5	Cavo di massa 1,5 mmq 1 m Cable de masse 1,5 mmq 1 m Work cable 1,5 mmq 1 m Massekabel 1,5 mmq 1 m Cable de masa 1,5 mmq 1 m	123556
6	Cavo alim. 3g0.75 1.5m spina schuko Cable al. 3g0.75 1.5m fiche schuko Mains cable 3g0.75 1.5m schuko plug Netzkabel 3g0.75 1.5m schuko steck. Cable alim. 3g0.75 1.5m esp. Schuko	132085
7	Kit amperometro Kit amperemetre Kit ammeter Kit amperemeter Kit amperimetro	981781
8	Trasformatore Transformateur Transformer Transformator Transformador	169349
9	Pressacavo Prensecable Cable bushing Kabelhalter Prensacabel	322138
10	Cornice Cadre Frame Rahmen Marco	322664
11	Colorado 40r pinza positivo 40a Colorado 40r pince positiv 40a Colorado 40r positive clamp 40a Colorado 40r positive zange 40a Colorado 40r pinza positivo 40a	712623
12	Colorado 40b pinza di massa 40a Colorado 40b pince de masse 40a Colorado 40b work clamp 40a Colorado 40b masseklemme 40a Colorado 40b pinza de masa 40a	712624

REF.	ELENCO PEZZI DI RICAMBIO PIECES DETACHEES SPARE PARTS LIST ERSATZTEILLISTE PIEZAS DE REPUESTO	CODICE CODE KODE
13	Fusibili 15a 10 pz Fusibles 15a 10 pcs Fuses 15a 10 pcs Sicherungen 15a 10 stk Fusibles 15a 10 pz	802256
14	Kit maniglia Kit poignee Kit handle Kit handgriff Kit manija	990339
15	Kit portafusibile Kit portefusible Fuseholder kit Sicherungshalter kit Kit porte fusible	990352
16	Kit mantello Kit capot Cover kit Deckel kit Kit panel de cobertura	990934
17	Kit frontale Kit partie frontal Front panel kit Gerätefront kit Kit frontal	981887
18	Portafusibile Porte fusible Fuse holder Sicherungshalter Porta fusible	122159
19	Fusibile Fusible Fuse Sicherung Fusible	122437

REF.	ELENCO PEZZI DI RICAMBIO PIECES DETACHEES SPARE PARTS LIST ERSATZTEILLISTE PIEZAS DE REPUESTO	CODICE CODE KODE

Schema elettrico, Schéma électrique, Diagram, Schaltplan, Esquema de conexiones.

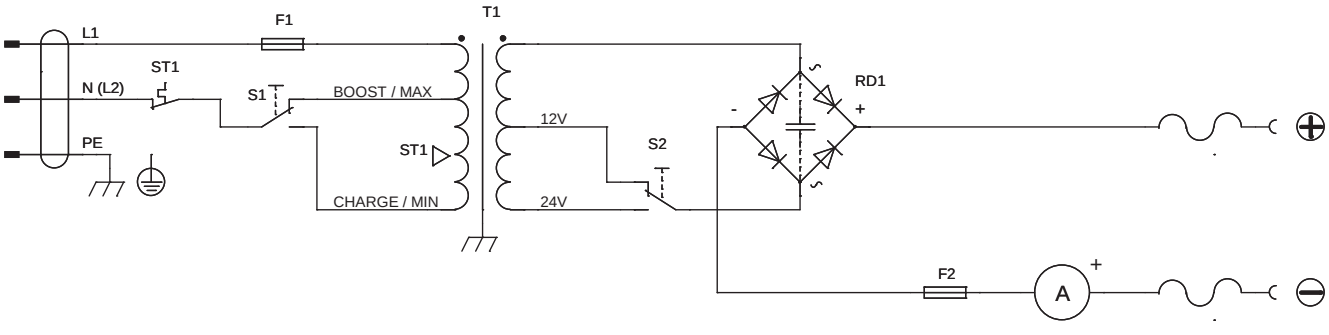

ELENCO PEZZI DI RICAMBIO
LISTE PIECES DETACHEES
SPARE PARTS LIST
ERSATZTEILLISTE
PIEZAS DE REPUESTO

ALPINE 20 BOOST
ALPINE 30 BOOST

Esploso macchina, Dessin appareil, Machine drawing, Explosions Zeichnung des Geräts, Diseño seccionado maquina.

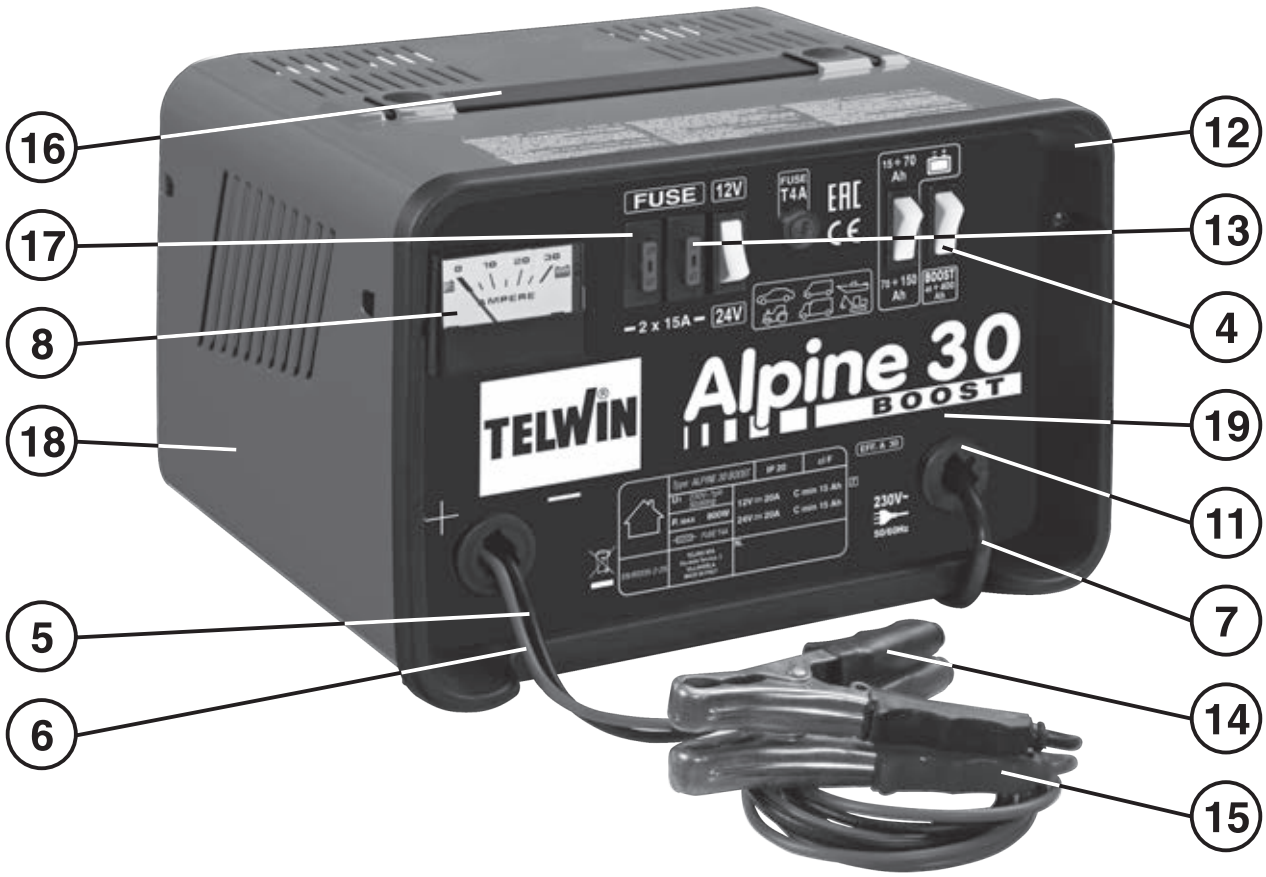

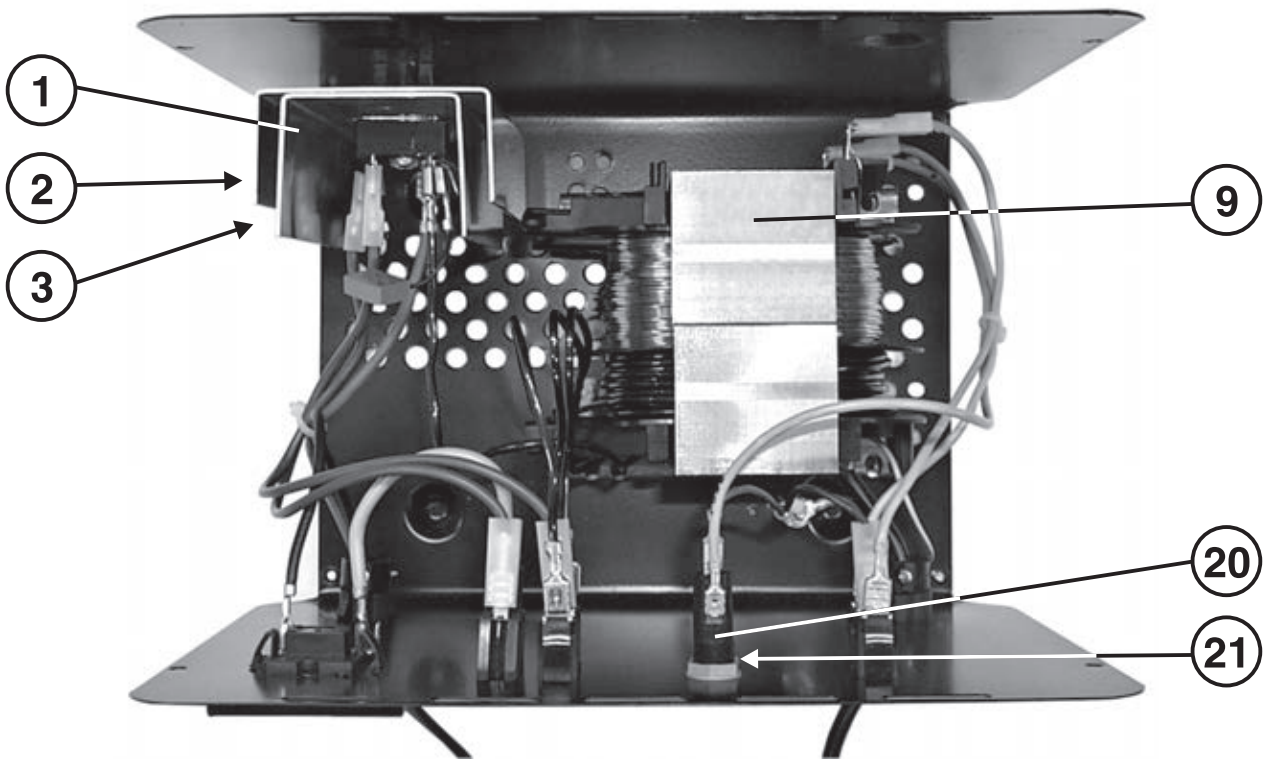

REF.	ELENCO PEZZI DI RICAMBIO PIECES DETACHEES SPARE PARTS LIST ERSATZTEILLISTE PIEZAS DE REPUESTO	ALPINE 20 BOOST CODICE	ALPINE 30 BOOST CODE KODE
1	Raddrizzatore Redresseur Rectifier Gleichrichter Rectificador	116346	121004
2	Kit termostato Kit thermostat Kit thermostat Thermostat Kit termostato	------	981967
3	Kit termostato Kit thermostat Kit thermostat Thermostat kit Kit termostato	------	981968
4	Deviatore Gareur Switch Schalter Interruptor	122400	122400
5	Cavo 4 mmq 1,5 m e pinza di massa Cable 4 mmq 1,5 m et pince de masse Cable 4 mmq 1,5 m and work clamp Kabel 4 mmq 1,5 m und massezange Cable 4 mmq 1,5 m y pinca de masa	123985	123987
6	Cavo 4mmq 1,5m + pinza positivo Cable 4mmq 1,5m + pince positive Cable 4mmq 1,5m + positive clamp Kabel 4mmq 1,5m + positive zange Cable 4mmq 1,5m + pinza positivo	123986	123988
7	Cavo alim. 3g0.75 1.5m spina schuko Cable al. 3g0.75 1.5m fiche schuko Mains cable 3g0.75 1.5m schuko plug Netzkabel 3g0.75 1.5m schuko steck. Cable alim. 3g0.75 1.5m esp. Schuko	132085	132085
8	Kit amperometro Kit amperemetre Kit ammeter Kit amperemeter Kit amperimetro	981782	981782
9	Trasformatore Transformateur Transformer Transformator Transformador	169563	169400
11	Pressacavo Prensecable Cable bushing Kabelhalter Prensacabel	322138	322138
12	Cornice Cadre Frame Rahmen Marco	322665	322665
13	Fusibili 15a 10 pz Fusibles 15a 10 pcs Fuses 15a 10 pcs Sicherungen 15a 10 stk Fusibles 15a 10 pz	802257	802256

REF.	ELENCO PEZZI DI RICAMBIO PIECES DETACHEES SPARE PARTS LIST ERSATZTEILLISTE PIEZAS DE REPUESTO	ALPINE 20 BOOST CODICE	ALPINE 30 BOOST CODE KODE
14	Colorado 60b pinza di massa 60a Colorado 60b pince de masse 60a Colorado 60b work clamp 60a Colorado 60b masseklemme 60a Colorado 60b pinza de masa 60a	712624	712361
15	Colorado 60r pinza positivo 60a Colorado 60r pince positiv 60a Colorado 60r positive clamp 60a Colorado 60r positive zange 60a Colorado 60r pinza positivo 60a	712623	712360
16	Kit maniglia Kit poignee Kit handle Kit handgriff Kit manija	990340	990340
17	Kit portafusibile Kit portefusible Fuseholder kit Sicherungshalter kit Kit porte fusible	990352	990352
18	Kit mantello Kit capot Cover kit Deckel kit Kit panel de cobertura	990939	990939
19	Kit frontale Kit partie frontal Front panel kit Gerätefront kit Kit frontal	981889	981890
20	Portafusibile Porte fusible Fuse holder Sicherungshalter Porta fusible	122159	122159
21	Fusibile Fusible Fuse Sicherung Fusible	122437	122515

Schema elettrico, Schéma électrique, Diagram, Schaltplan, Esquema de conexiones.

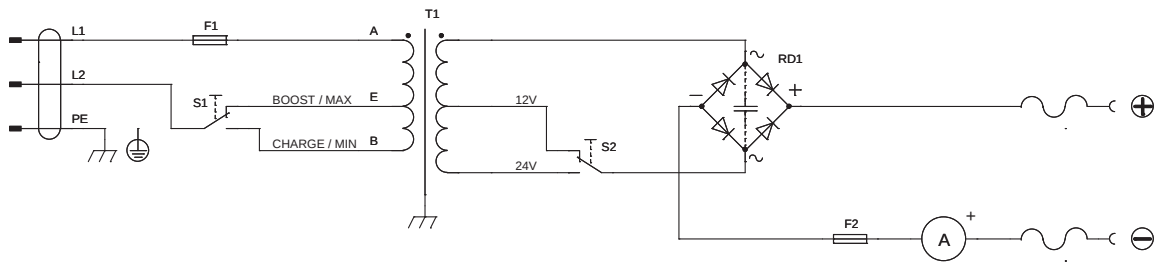

ALPINE 20 BOOST

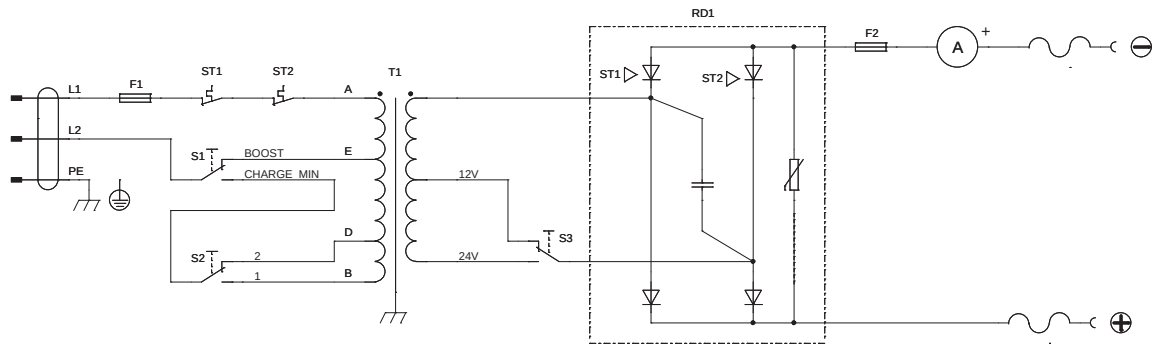

ALPINE 30 BOOST

ELENCO PEZZI DI RICAMBIO
LISTE PIECES DETACHEES
SPARE PARTS LIST
ERSATZTEILLISTE
PIEZAS DE REPUESTO

ALPINE 50 BOOST

Esploso macchina, Dessin appareil, Machine drawing, Explosions Zeichnung des Geräts, Diseño seccionado maquina.

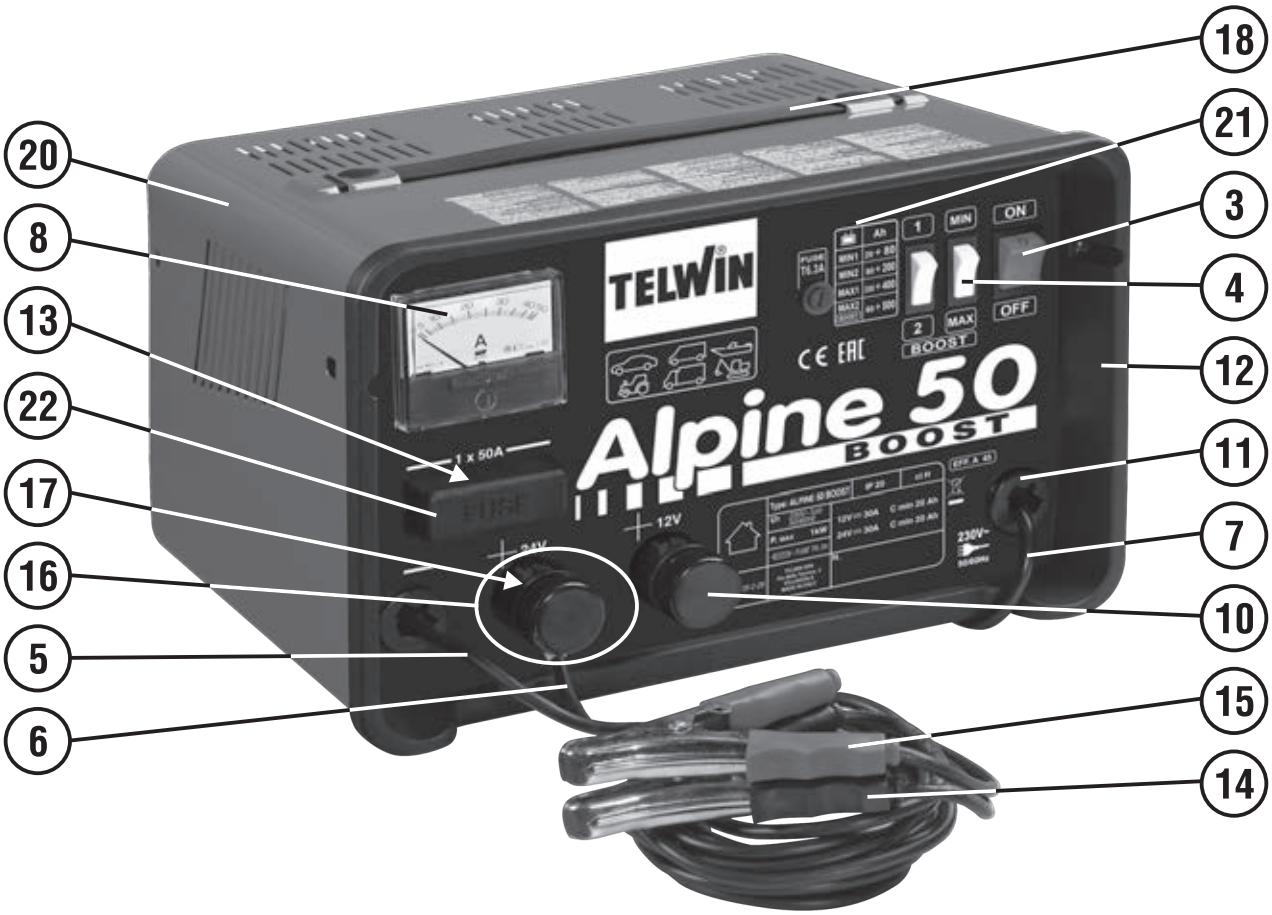

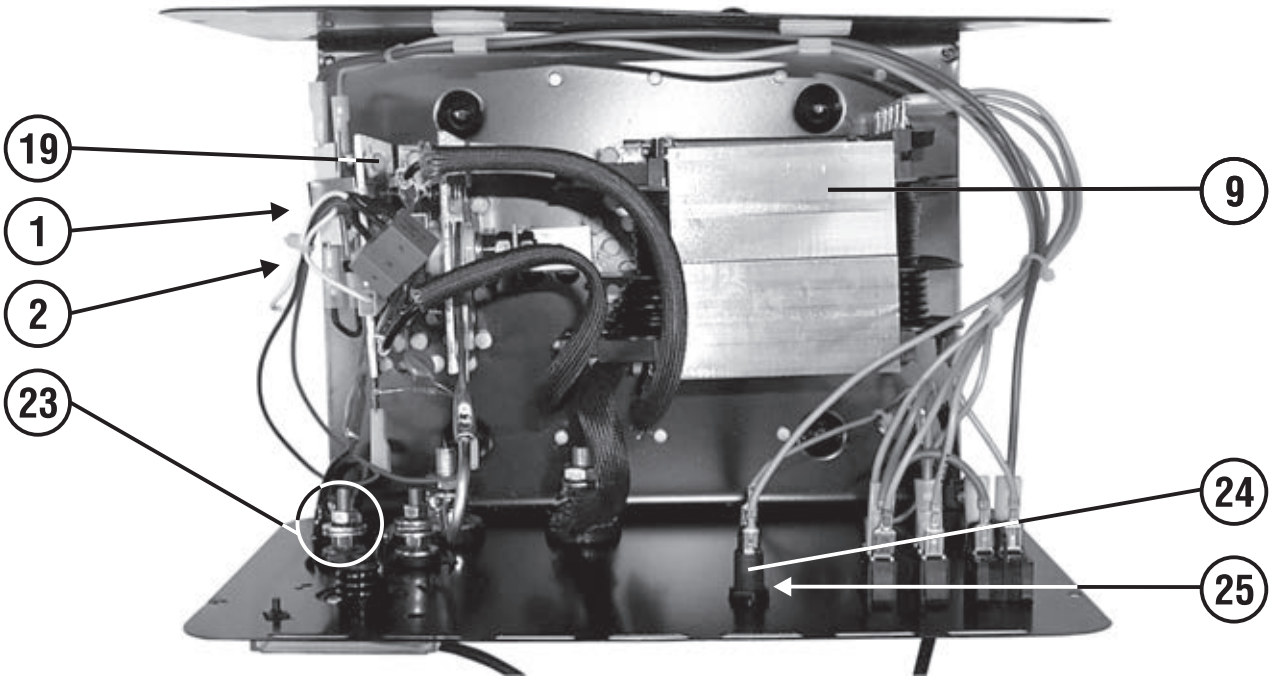

REF.	ELENCO PEZZI DI RICAMBIO PIECES DETACHEES SPARE PARTS LIST ERSATZTEILLISTE PIEZAS DE REPUESTO	CODICE CODE KODE
1	Kit termostato Kit thermostat Kit thermostat Thermostat Kit termostato	981967
2	Kit termostato Kit thermostat Kit thermostat Thermostat kit Kit termostato	981968
3	Interruttore Interrupteur Switch Schalter Interruptor	122381
4	Deviatore Gareur Switch Schalter Interruptor	122400
5	Cavo 6 mmq 2 m e pinza di massa Cable 6 mmq 2 m et pince de masse Cable 6 mmq 2 m and work clamp Kabel 6 mmq 2 m und massezange Cable 6 mmq 2 m y pinca de masa	123569
6	Cavo 6mmq 2 m pinza positivo Cable 6mmq 2 m pince positive Cable 6mmq 2 m positive clamp Kabel 6mmq 2 m positive zange Cable 6mmq 2 m pinza positivo	123581
7	Cavo alim. 3g0.75 1.5m spina schuko Cable al. 3g0.75 1.5m fiche schuko Mains cable 3g0.75 1.5m schuko plug Netzkabel 3g0.75 1.5m schuko steck. Cable alim. 3g0.75 1.5m esp. Schuko	132085
8	Amperometro Amperemetre Ammeter Amperemeter Amperimetro	152132
9	Trasformatore Transformateur Transformer Transformator Transformador	169401
10	Volantino Volant Handwheel Handrad Volante	312053
11	Pressacavo Presse cable Cable bushing Kabelhalter Prensa cable	322112
12	Cornice Cadre Frame Rahmen Marco	322666

REF.	ELENCO PEZZI DI RICAMBIO PIECES DETACHEES SPARE PARTS LIST ERSATZTEILLISTE PIEZAS DE REPUESTO	CODICE CODE KODE
13	Fusibili lamella 50a 20 pz Fusibles 50a 20 pcs Fuses 50a 20 pcs Sicherungen 50a 20 stk Fusibles 50a 20 pz	802259
14	Colorado 60b pinza di massa 60a Colorado 60b pince de masse 60a Colorado 60b work clamp 60a Colorado 60b masseklemme 60a Colorado 60b pinza de masa 60a	712361
15	Colorado 60r pinza positivo 60a Colorado 60r pince positiv 60a Colorado 60r positive clamp 60a Colorado 60r positive zange 60a Colorado 60r pinza positivo 60a	712360
16	Kit morsetto completo d.33mm Kit borne complete d.33mm Complete terminal kit d.33mm Komplet kabelklemme kit d.33mm Kit borne completo d.33mm	990162
17	Kit coppia rondelle isolanti Kit rondelles isolantes Insulating washers kit Isolierscheibekit Kit arandelas asladoras	990163
18	Kit maniglia Kit poignee Kit handle Kit handgriff Kit manija	990341
19	Kit raddrizzatore Kit redresseur Rectifier kit Gleichrichter kit Kit rectificador	990685
20	Kit mantello Kit capot Cover kit Deckel kit Kit panel de cobertura	990948
21	Kit frontale Kit partie frontal Front panel kit Geraetefront kit Kit frontal	981252
22	Cuffia per fusibili Couvre fusibles Fuse cover Kasten fuer sicherungen Cubrefusibile	322051
23	Morsetto per fusibile Borne pour fusible Fuse holder Sicherungshalter Bocadillo para fusible	980036
24	Portafusibile Porte fusible Fuse holder Sicherungshalter Porta fusible	122159

REF.	ELENCO PEZZI DI RICAMBIO PIECES DETACHEES SPARE PARTS LIST ERSATZTEILLISTE PIEZAS DE REPUESTO	CODICE CODE KODE
25	Fusibile Fusible Fuse Sicherung Fusible	122410

Schema elettrico, Schéma électrique, Diagram, Schaltplan, Esquema de conexiones.

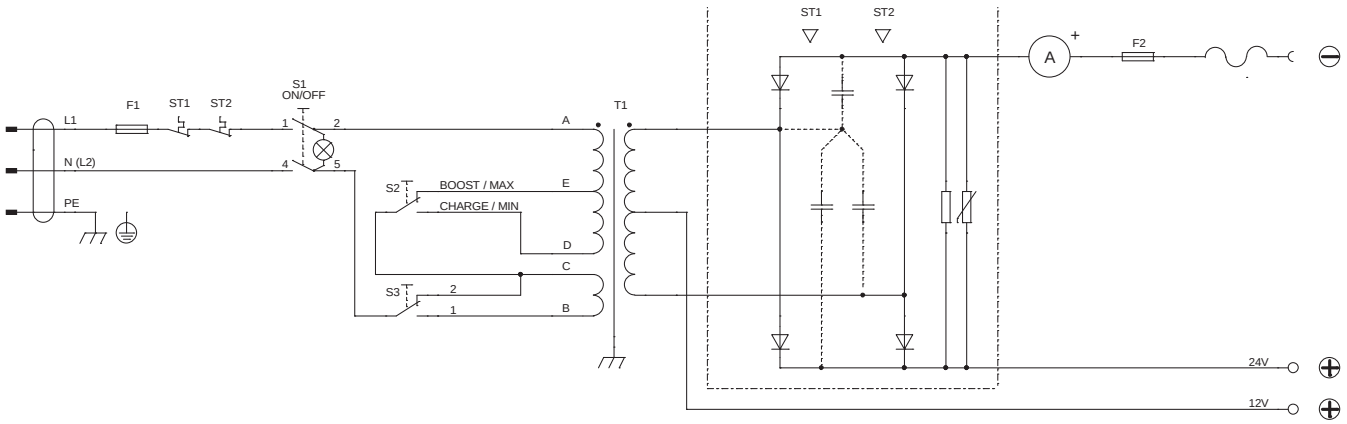

ELENCO PEZZI DI RICAMBIO
LISTE PIECES DETACHEES
SPARE PARTS LIST
ERSATZTEILLISTE
PIEZAS DE REPUESTO

COMPUTER 48/2 PROF

TELWIN

Esploso macchina, Dessin appareil, Machine drawing, Explosions Zeichnung des Geräts, Diseño seccionado maquina.

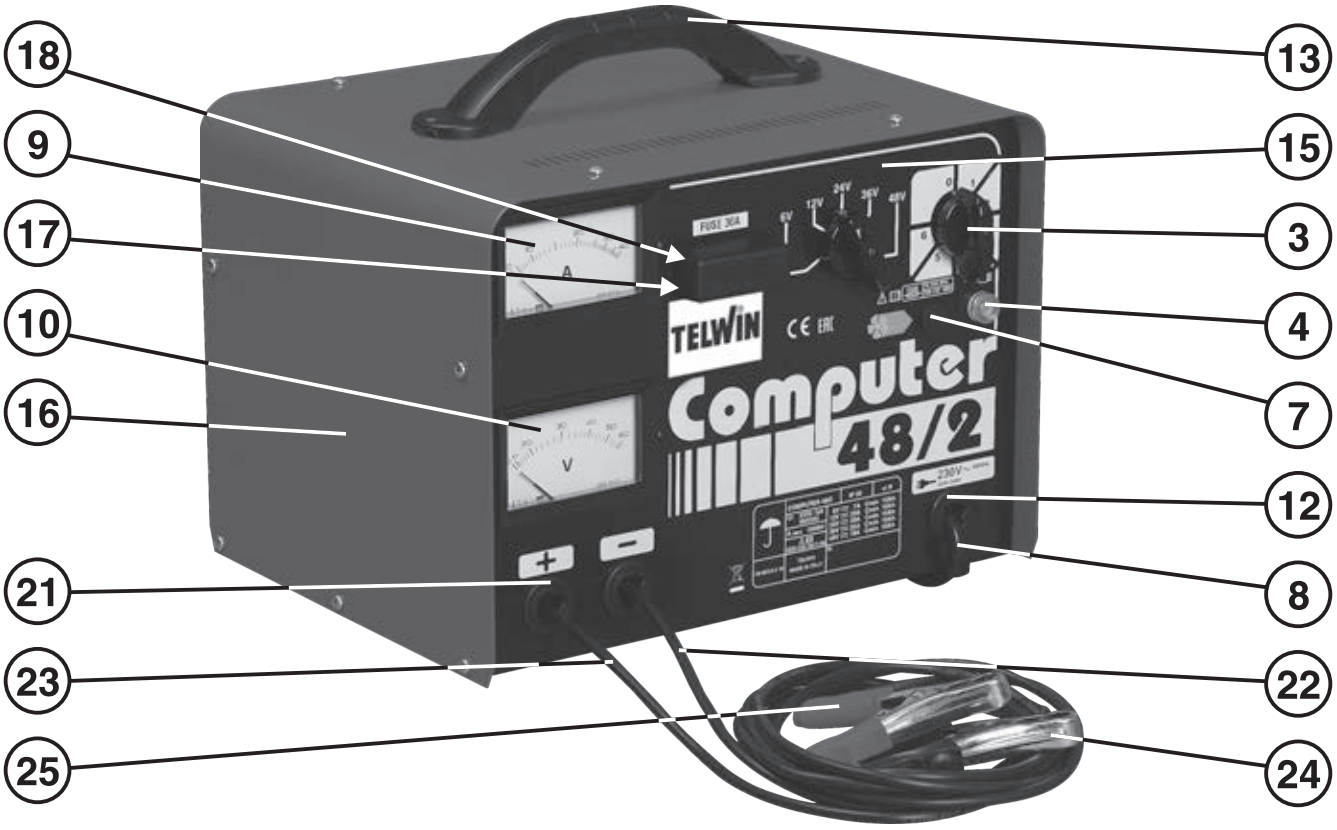

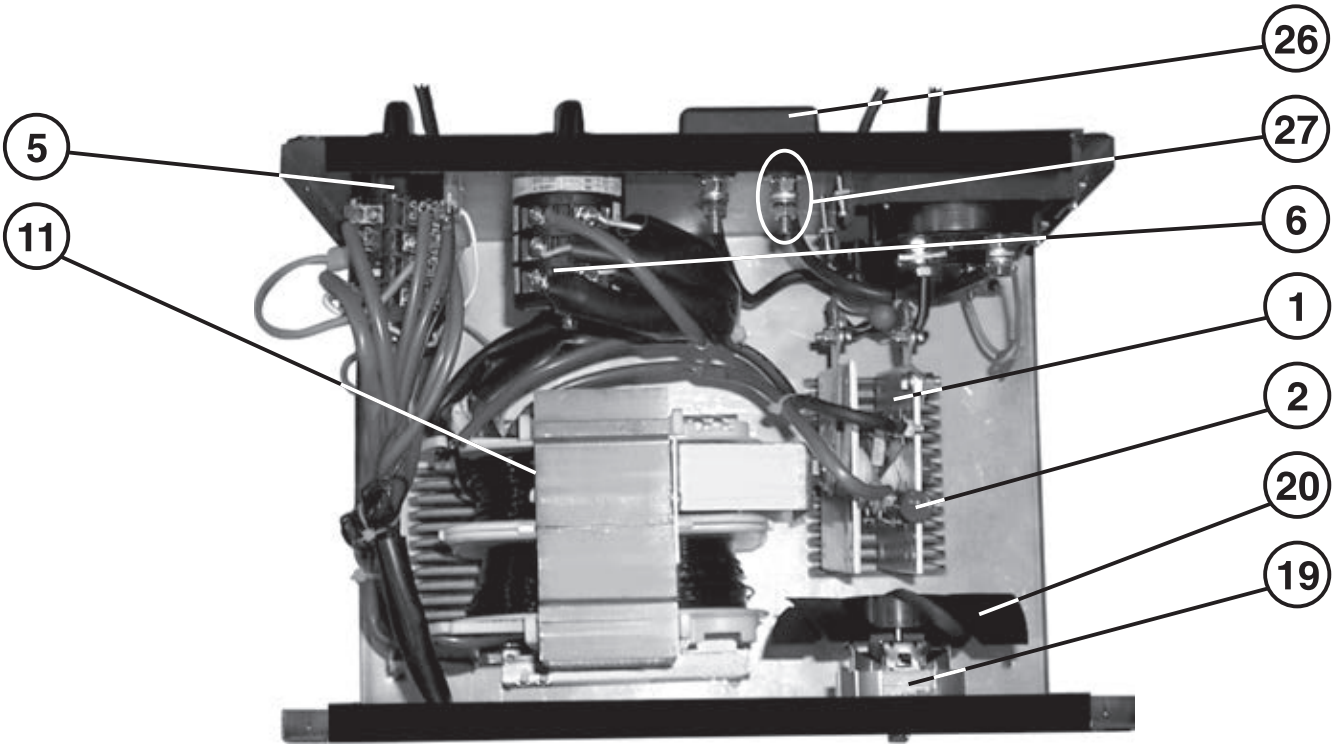

REF.	ELENCO PEZZI DI RICAMBIO PIECES DETACHEES SPARE PARTS LIST ERSATZTEILLISTE PIEZAS DE REPUESTO	CODICE CODE KODE
1	Kit raddrizzatore Kit redresseur Rectifier kit Gleichrichter kit Kit rectificador	990774
2	Protezione raddrizzatore Protection redresseur Rectifier protection Gleichrichterschutz Proteccion rectificador	112183
3	Assieme manopola per commutatore Set poigne pour commutateur Switch knob set Umschaltergriff set Set manjia para conmutador	323101
4	Lampada Temoin lumineux Pilot lamp Kontrollampe Piloto	122139
5	Commutatore Commutateur Switch Schalter Conmutador	121510
6	Commutatore Commutateur Switch Schalter Commutateur	122354
7	Portafusibile Porte fusible Fuse holder Sicherungshalter Porta fusible	122159
8	Cavo alim. 3g1.5 2m spina schuko Cable alim. 3g1.5 2m fiche schuko Mains cable 3g1.5 2m schuko plug Netzkabel 3g1.5 2m schuko stecker Cable alim. 3g1.5 2m espina schuko	132310
9	Amperometro Amperemetre Ammeter Amperemeter Amperimetro	152289
10	Kit voltmetro Kit voltmetre Voltmeter kit Voltmeter kit Kit voltmetre	981664
11	Trasformatore Transformateur Transformer Transformator Transformador	169050
12	Pressacavo Presse cable Cable bushing Kabelhalter Prensa cable	322112
13	Maniglia Poignee Handle Handgriff Manija	312007
15	Kit fondo Kit chassis Bottom kit Bodenteil kit Kit fondo	980239
16	Kit mantello Kit capot Cover kit Deckelkit Kit panel de cobertura	981181
17	Fusibili lamella 30a 20 pz Fusibles 30a 20 pcs Fuses 30a 20 pcs Sicherungen 30a 20 stk Fusibles 30a 20 pz	802258
18	Kit coppia rondelle isolanti Kit rondelles isolantes Couple of insulating washers kit Isolierscheibepaar kit Kit par de arandelas asladoras	990012
19	Motore ventilatore Moteur ventilateur Fan motor Ventilatormotor Motor ventilacion	152080
20	Ventola Helice Fan blade Flügelrad Aventador	312025
21	Pressacavo Prensecable Cable bushing Kabelhalter Prensacabel	322138
22	Cavo 6 mmq 2 m e pinza di massa Cable 6 mmq 2 m et pince de masse Cable 6 mmq 2 m and work clamp Kabel 6 mmq 2 m und massezange Cable 6 mmq 2 m y pinca de masa	123569
23	Cavo 6mmq 2 m pinza positivo Cable 6mmq 2 m pince positive Cable 6mmq 2 m positive clamp Kabel 6mmq 2 m positive zange Cable 6mmq 2 m pinza positivo	123588
24	Colorado 60b pinza di massa 60a Colorado 60b pince de masse 60a Colorado 60b work clamp 60a Colorado 60b masseklemme 60a Colorado 60b pinza de masa 60a	712361
25	Colorado 60r pinza positivo 60a Colorado 60r pince positiv 60a Colorado 60r positive clamp 60a Colorado 60r positive zange 60a Colorado 60r pinza positivo 60a	712360
26	Cuffia per fusibili Couvre fusibles Fuse cover Kasten fuer sicherungen Cubrefusibile	322051
27	Morsetto per fusibile Borne pour fusible Fuse holder Sicherungshalter Bocadillo para fusible	980036

Schema elettrico, Schéma électrique, Diagram, Schaltplan, Esquema de conexiones.

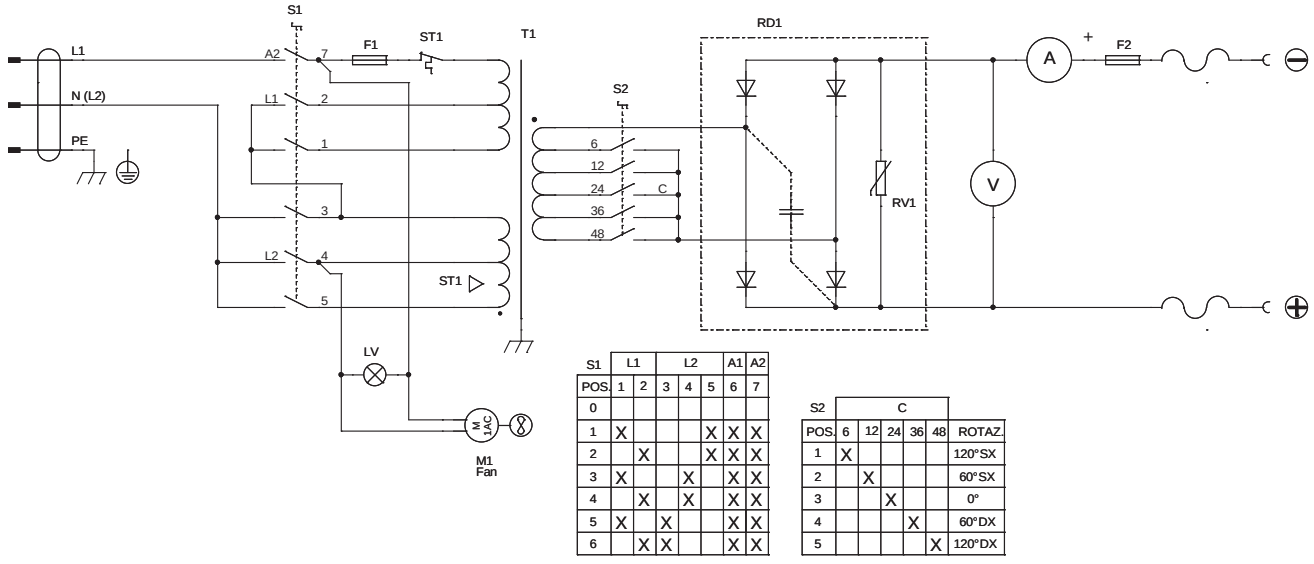

S1	L1		L2			A1	A2
POS.	1	2	3	4	5	6	7
0							
1	X				X	X	X
2		X			X	X	X
3	X			X		X	X
4		X		X		X	X
5	X		X			X	X
6		X	X			X	X

S2	C					
POS.	6	12	24	36	48	ROTAZ.
1	X					120°SX
2		X				60°SX
3			X			0°
4				X		60°DX
5					X	120°DX

ELENCO PEZZI DI RICAMBIO
LISTE PIECES DETACHEES
SPARE PARTS LIST
ERSATZTEILLISTE
PIEZAS DE REPUESTO

LEADER 150 START

Esploso macchina, Dessin appareil, Machine drawing, Explosions Zeichnung des Geräts, Diseño seccionado maquina.



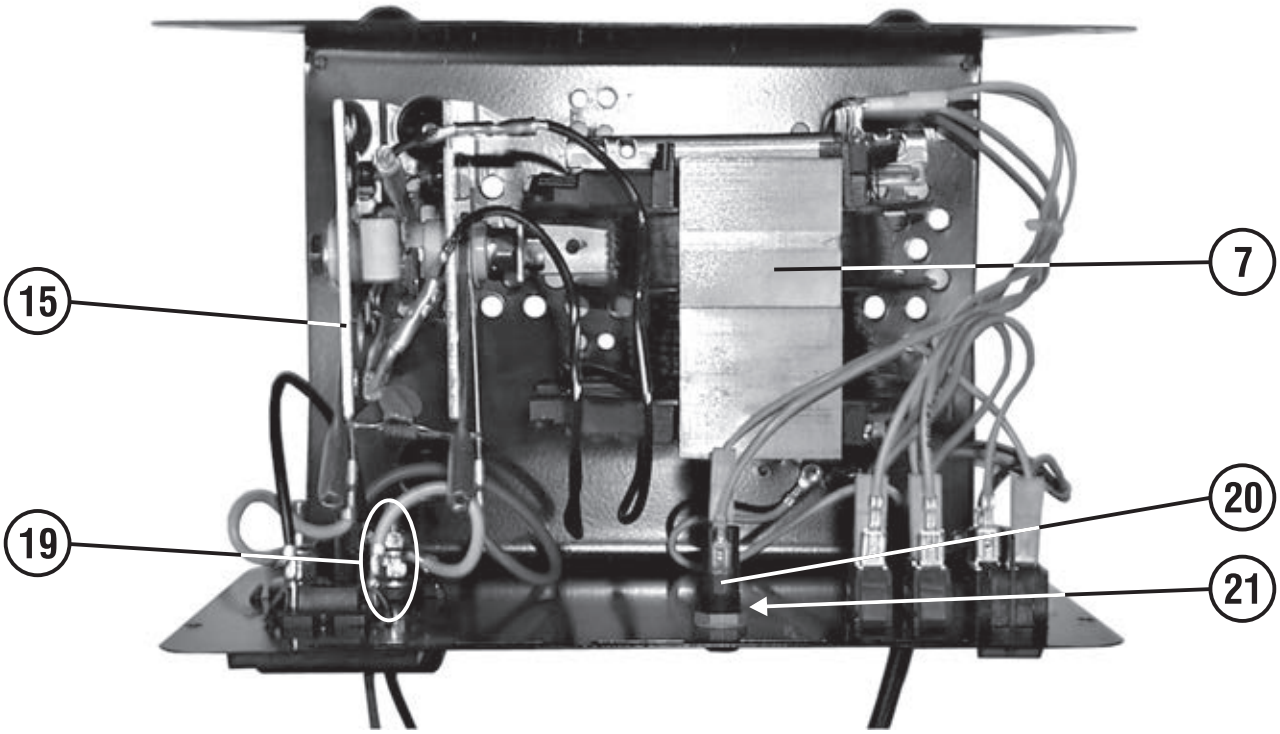

REF.	ELENCO PEZZI DI RICAMBIO PIECES DETACHEES SPARE PARTS LIST ERSATZTEILLISTE PIEZAS DE REPUESTO	CODICE CODE KODE
1	Deviatore Gareur Switch Schalter Interruptor	122400
2	Interruttore Interupteur Switch Schalter Interruptor	122477
3	Cavo 4 mmq 1,5 m e pinza di massa Cable 4 mmq 1,5 m et pince de masse Cable 4 mmq 1,5 m and work clamp Kabel 4 mmq 1,5 m und massezange Cable 4 mmq 1,5 m y pinca de masa	123987
4	Cavo 4mmq 1,5m + pinza positivo Cable 4mmq 1,5m + pince positive Cable 4mmq 1,5m + positive clamp Kabel 4mmq 1,5m + positive zange Cable 4mmq 1,5m + pinza positivo	123988
5	Cavo alim. 3g1.5 2m spina schuko Cable alim. 3g1.5 2m fiche schuko Mains cable 3g1.5 2m schuko plug Netzkabel 3g1.5 2m schuko stecker Cable alim. 3g1.5 2m espina schuko	132310
6	Kit amperometro Kit amperemetre Kit ammeter Kit amperemeter Kit amperimetro	981783
7	Trasformatore Transformateur Transformer Transformator Transformador	169562
8	Pressacavo Presse cable Cable bushing Kabelhalter Prensa cable	322112
9	Pressacavo Prensecable Cable bushing Kabelhalter Prensacabel	322138
10	Cornice Cadre Frame Rahmen Marco	322665
11	Fusibili lamella 30a 20 pz Fusibles 30a 20 pcs Fuses 30a 20 pcs Sicherungen 30a 20 stk Fusibles 30a 20 pz	802258
12	Colorado 60b pinza di massa 60a Colorado 60b pince de masse 60a Colorado 60b work clamp 60a Colorado 60b masseklemme 60a Colorado 60b pinza de masa 60a	712361
13	Colorado 60r pinza positivo 60a Colorado 60r pince positiv 60a Colorado 60r positive clamp 60a Colorado 60r positive zange 60a Colorado 60r pinza positivo 60a	712360
14	Kit maniglia Kit poignee Kit handle Kit handgriff Kit manija	990340
15	Kit raddrizzatore Kit redresseur Rectifier kit Gleichrichter kit Kit rectificador	990774
16	Kit mantello Kit capot Cover kit Deckel kit Kit panel de cobertura	990939
17	Kit frontale Kit partie frontal Front panel kit Gerätefront kit Kit frontal	981895
18	Cuffia per fusibili Couvre fusibles Fuse cover Kasten fuer sicherungen Cubrefusibile	322051
19	Morsetto per fusibile Borne pour fusible Fuse holder Sicherungshalter Bocadillo para fusible	980036
20	Portafusibile Porte fusible Fuse holder Sicherungshalter Porta fusible	122159
21	Fusibile Fusible Fuse Sicherung Fusible	122515

Schema elettrico, Schéma électrique, Diagram, Schaltplan, Esquema de conexiones.

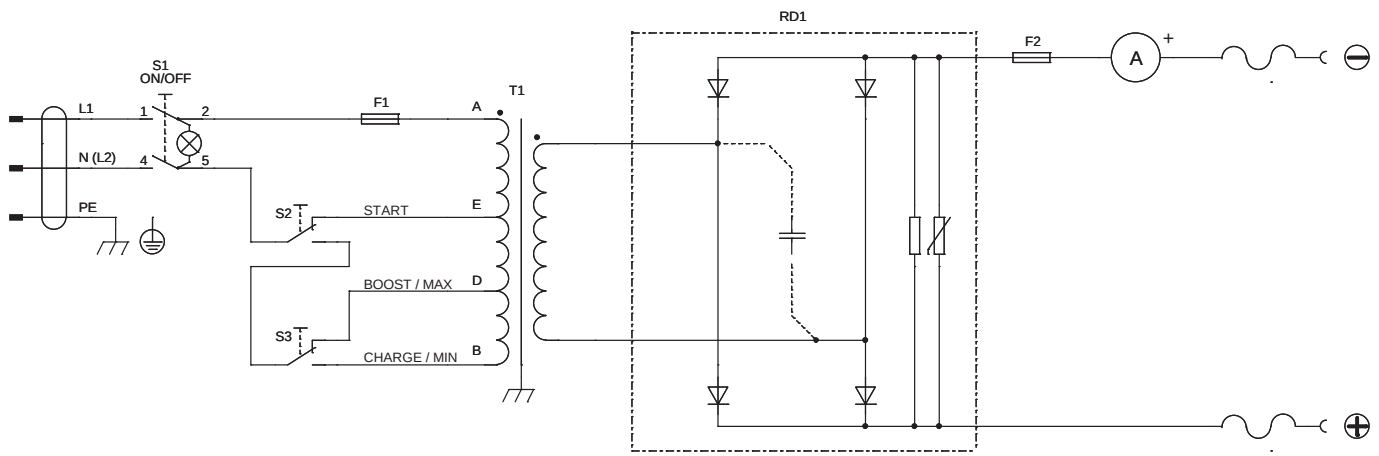

ELENCO PEZZI DI RICAMBIO
LISTE PIECES DETACHEES
SPARE PARTS LIST
ERSATZTEILLISTE
PIEZAS DE REPUESTO

LEADER 220 START

TELWIN

Esploso macchina, Dessin appareil, Machine drawing, Explosions Zeichnung des Geräts, Diseño seccionado maquina.



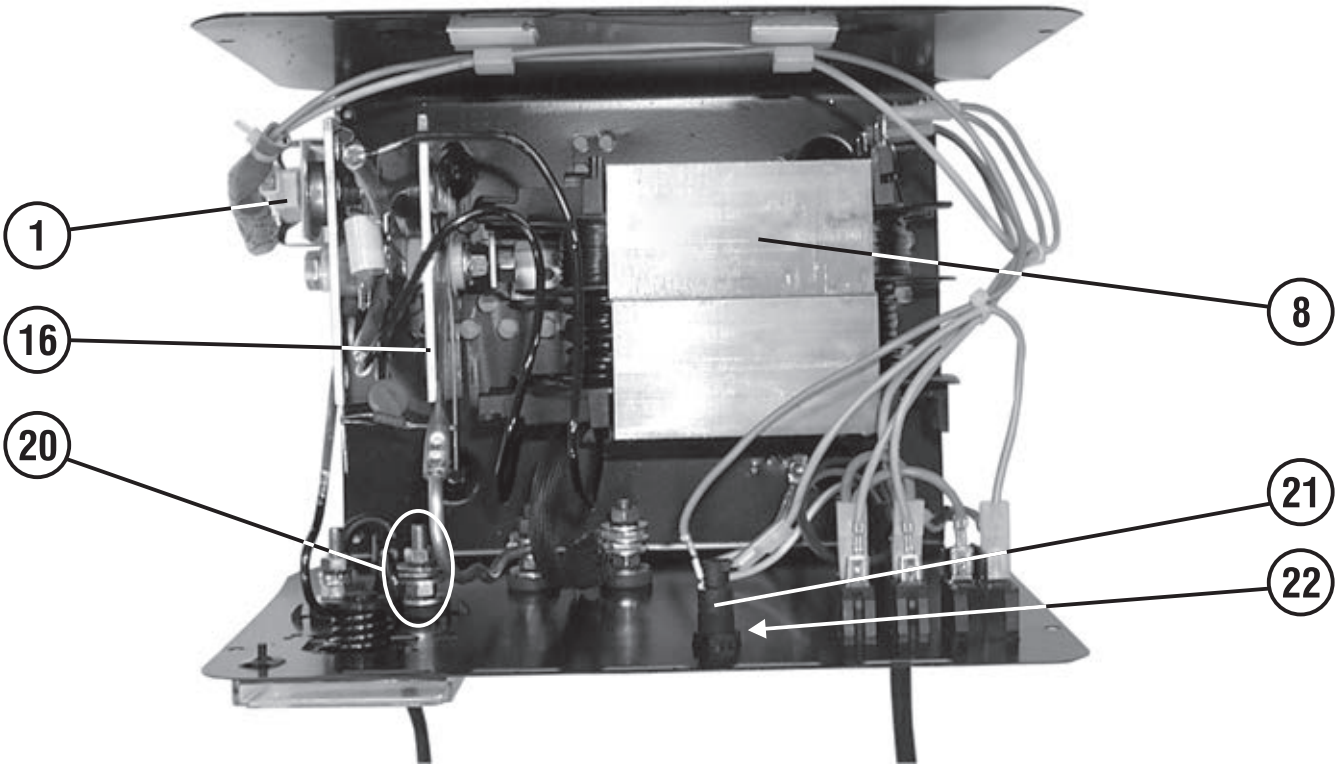

REF.	ELENCO PEZZI DI RICAMBIO PIECES DETACHEES SPARE PARTS LIST ERSATZTEILLISTE PIEZAS DE REPUESTO	CODICE CODE KODE
1	Kit termostato Kit thermostat Kit thermostat Thermostat Kit termostato	981967
2	Deviatore Gareur Switch Schalter Interruptor	122400
3	Interruttore Interupteur Switch Schalter Interruptor	122477
4	Cavo 6 mmq 2 m e pinza di massa Cable 6 mmq 2 m et pince de masse Cable 6 mmq 2 m and work clamp Kabel 6 mmq 2 m und massezange Cable 6 mmq 2 m y pinca de masa	123569
5	Cavo 6mmq 2 m pinza positivo Cable 6mmq 2 m pince positive Cable 6mmq 2 m positive clamp Kabel 6mmq 2 m positive zange Cable 6mmq 2 m pinza positivo	123588
6	Cavo alim. 3g1.5 2m spina schuko Cable alim. 3g1.5 2m fiche schuko Mains cable 3g1.5 2m schuko plug Netzkabel 3g1.5 2m schuko stecker Cable alim. 3g1.5 2m espina schuko	132310
7	Amperometro Amperemetre Ammeter Amperemeter Amperimetro	152020
8	Trasformatore Transformateur Transformer Transformator Transformador	169561
9	Pressacavo Presse cable Cable bushing Kabelhalter Prensa cable	322112
10	Cornice Cadre Frame Rahmen Marco	322665
11	Fusibili lamella 30a 20 pz Fusibles 30a 20 pcs Fuses 30a 20 pcs Sicherungen 30a 20 stk Fusibles 30a 20 pz	802258
12	Kit morsetto di carica rosso Kit borne de charge rouge Red charging clamp kit Rote anschlussklemme kit Kit borne de carga rojo	990072
13	Colorado 60b pinza di massa 60a Colorado 60b pince de masse 60a Colorado 60b work clamp 60a Colorado 60b masseklemme 60a Colorado 60b pinza de masa 60a	712361
14	Colorado 60r pinza positivo 60a Colorado 60r pince positiv 60a Colorado 60r positive clamp 60a Colorado 60r positive zange 60a Colorado 60r pinza positivo 60a	712360
15	Kit maniglia Kit poignee Kit handle Kit handgriff Kit manija	990340
16	Kit raddrizzatore Kit redresseur Rectifier kit Gleichrichter kit Kit rectificador	990774
17	Kit mantello Kit capot Cover kit Deckel kit Kit panel de cobertura	990939
18	Kit frontale Kit partie frontal Front panel kit Geraetefront kit Kit frontal	981187
19	Cuffia per fusibili Couvre fusibles Fuse cover Kasten fuer sicherungen Cubrefusibile	322051
20	Morsetto per fusibile Borne pour fusible Fuse holder Sicherungshalter Bocadillo para fusible	980036
21	Portafusibile Portefusible Fuseholder Sicherungshalter Porte fusible	121147
22	Fusibile Fusible Fuse Sicherung Fusible	122410

Schema elettrico, Schéma électrique, Diagram, Schaltplan, Esquema de conexiones.

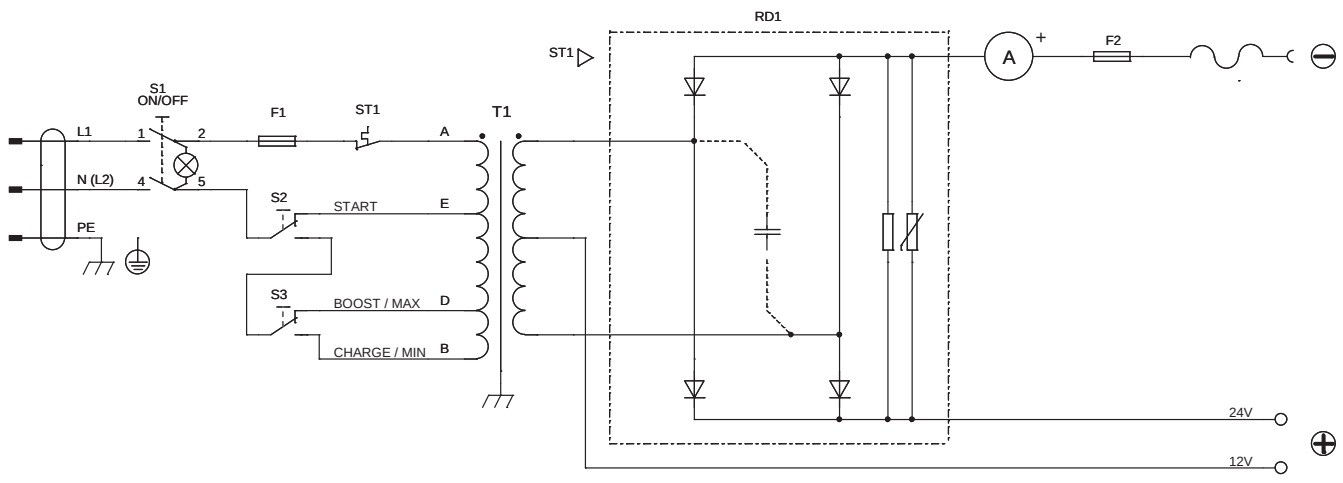

ELENCO PEZZI DI RICAMBIO
LISTE PIECES DETACHEES
SPARE PARTS LIST
ERSATZTEILLISTE
PIEZAS DE REPUESTO

LEADER 400 START

TELWIN

Esploso macchina, Dessin appareil, Machine drawing, Explosions Zeichnung des Geräts, Diseño seccionado maquina.



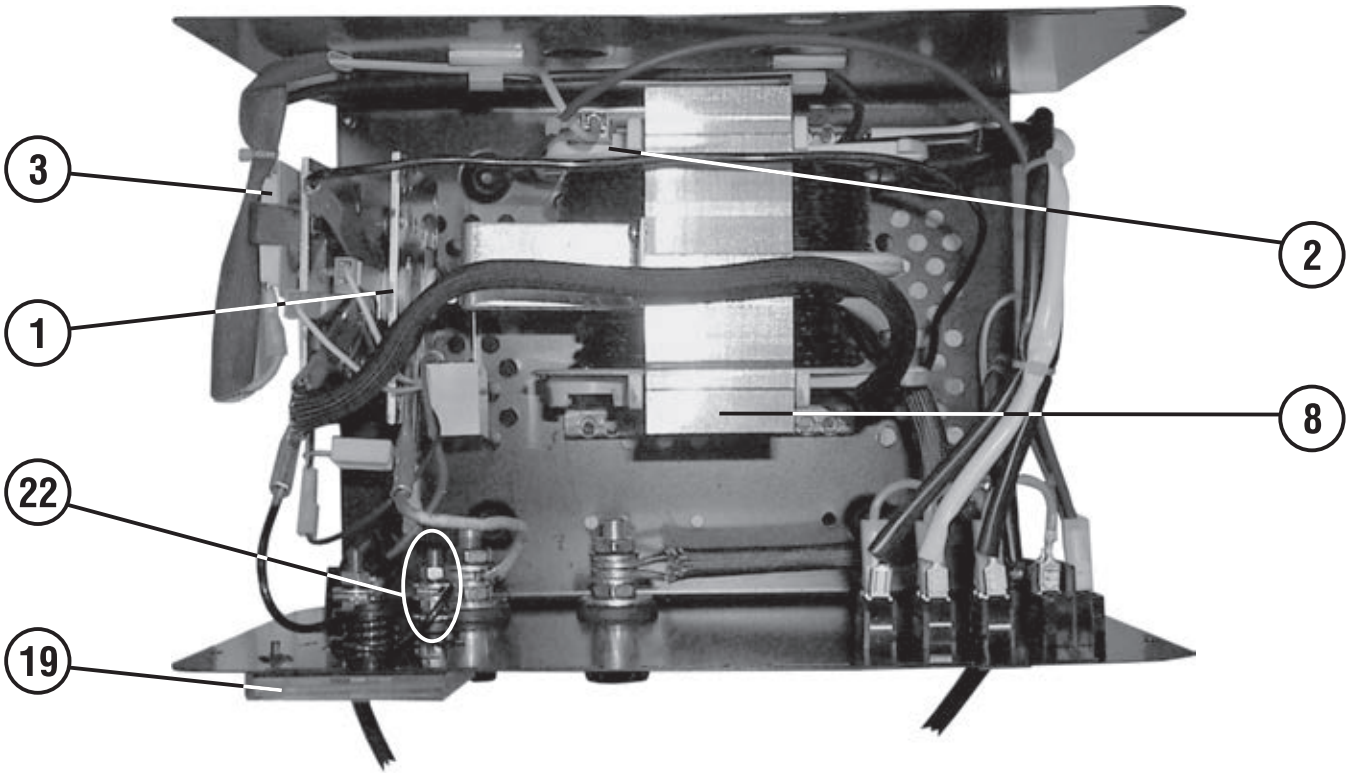

REF.	ELENCO PEZZI DI RICAMBIO PIECES DETACHEES SPARE PARTS LIST ERSATZTEILLISTE PIEZAS DE REPUESTO	CODICE CODE KODE
1	Kit raddrizzatore Kit redresseur Rectifier kit Gleichrichter kit Kit rectificador	990685
2	Termostato Thermostat Thermostat Thermostat Termostato	121714
3	Kit termostato Kit thermostat Kit thermostat Thermostat Kit termostato	981967
4	Interruttore Interupteur Switch Schalter Interruptor	122477
5	Deviatore Gareur Switch Schalter Interruptor	122400
6	Cavo 10 mmq 2 m Cable 10 mmq 2 m Cable 10 mmq 2 m Kabel 10 mmq 2 m Cable 10 mmq 2 m	123425
7	Cavo alim. 3g1.5 2m spina schuko Cable alim. 3g1.5 2m fiche schuko Mains cable 3g1.5 2m schuko plug Netzkabel 3g1.5 2m schuko stecker Cable alim. 3g1.5 2m espina schuko	132310
8	Trasformatore Transformateur Transformer Transformator Transformador	169140
9	Volantino Volant Handwheel Handrad Volante	312053
10	Pressacavo Presse cable Cable bushing Kabelhalter Prensa cable	322112
11	Kit frontale Kit partie frontal Front panel kit Geraetefront kit Kit frontal	981189
12	Kit mantello Kit capot Cover kit Deckel kit Kit panel de cobertura	990948

REF.	ELENCO PEZZI DI RICAMBIO PIECES DETACHEES SPARE PARTS LIST ERSATZTEILLISTE PIEZAS DE REPUESTO	CODICE CODE KODE
13	Colorado 150b pinza di massa 150a Colorado 150b pince de masse 150a Colorado 150b work clamp 150a Colorado 150b masseklemme 150a Colorado 150b pinza de masa 150a	712001
14	Colorado 150r pinza positivo 150a Colorado 150r pince positiv 150a Colorado 150r positive clamp 150a Colorado 150r positive zange 150a Colorado 150r pinza positivo 150a	712002
15	Fusibili lamella 50a 20 pz Fusibles 50a 20 pcs Fuses 50a 20 pcs Sicherungen 50a 20 stk Fusibles 50a 20 pz	802259
16	Kit morsetto completo d.33mm Kit borne complete d.33mm Complete terminal kit d.33mm Komplet kabelklemme kit d.33mm Kit borne completo d.33mm	990162
17	Kit coppia rondelle isolanti Kit rondelles isolantes Insulating washers kit Isolierscheibekit Kit arandelas asladoras	990163
18	Kit maniglia Kit poignee Kit handle Kit handgriff Kit manija	990341
19	Amperometro Amperemetre Ammeter Amperemeter Amperimetro	152020
20	Cornice Cadre Frame Rahmen Marco	322666
21	Cuffia per fusibili Couvre fusibles Fuse cover Kasten fuer sicherungen Cubrefusibile	322051
22	Morsetto per fusibile Borne pour fusible Fuse holder Sicherungshalter Bocadillo para fusible	980036

REF.	ELENCO PEZZI DI RICAMBIO PIECES DETACHEES SPARE PARTS LIST ERSATZTEILLISTE PIEZAS DE REPUESTO	CODICE CODE KODE

Schema elettrico, Schéma électrique, Diagram, Schaltplan, Esquema de conexiones.

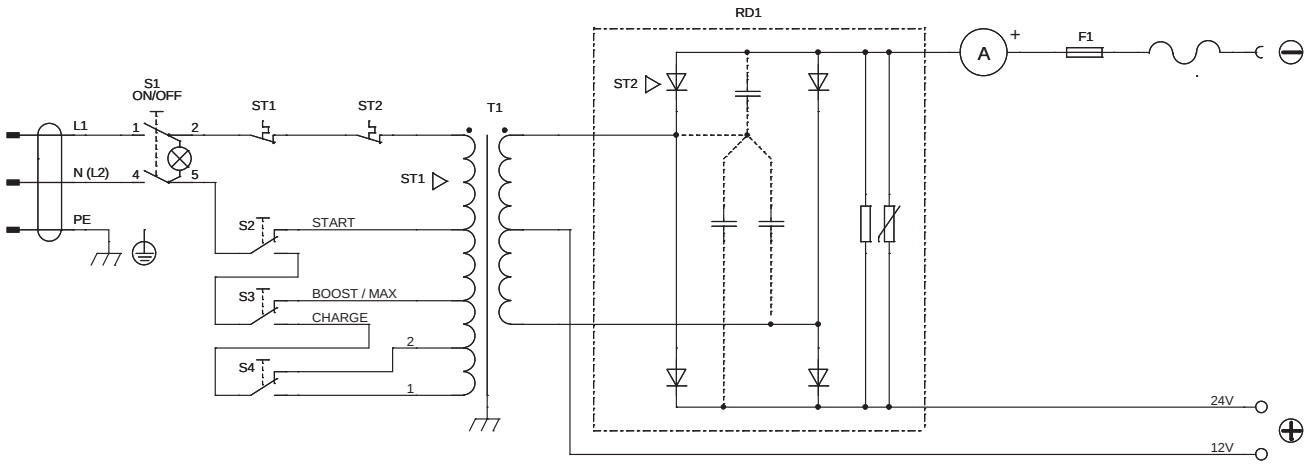

ELENCO PEZZI DI RICAMBIO
LISTE PIECES DETACHEES
SPARE PARTS LIST
ERSATZTEILLISTE
PIEZAS DE REPUESTO

DYNAMIC 320 START
DYNAMIC 420 START

TELWIN

Esploso macchina, Dessin appareil, Machine drawing, Explosions Zeichnung des Geräts, Diseño seccionado maquina.



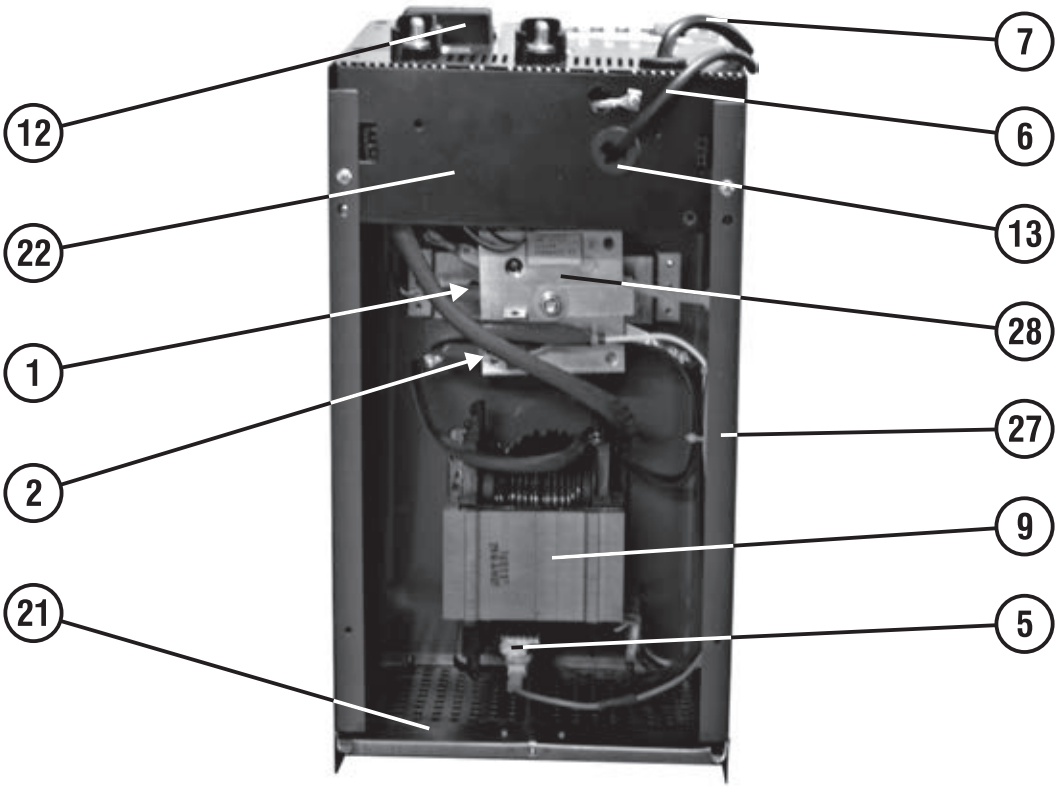

REF.	ELENCO PEZZI DI RICAMBIO PIECES DETACHEES SPARE PARTS LIST ERSATZTEILLISTE PIEZAS DE REPUESTO	DYNAMIC 320 START CODICE	DYNAMIC 420 START CODE KODE
1	Protezione raddrizzatore Protection redresseur Rectifier protection Gleichrichterschutz Proteccion rectificador	112185	112183
2	Kit termostato Kit thermostat Kit thermostat Thermostat Kit termostato	981967	981967
3	Interruttore Interrupteur Switch Schalter Interruptor	122477	122381
4	Deviatore Gareur Switch Schalter Interruptor	122400	122400
5	Termostato Thermostat Thermostat Thermostat Termostato	121714	121716
6	Cavo 16mmq 2m- massa Cable 16mmq 2m- masse Cable 16mmq 2m- earth Kabel 16mmq 2m- masse Cable 16mmq 2m- mase	980365	980366
7	Cavo alim. 3g2.5 2 M spina schuko Cable alim. 3g2.5 2 M fiche schuko Mains cable 3g2.5 2 M schuko plug Netzkabel 3g2.5 2 M schuko stecker Cable alim. 3g2.5 2 M espina schuko	132310	132009
8	Amperometro Amperemetre Ammeter Amperemeter Amperimetro	152020	152248
9	Trasformatore Transformateur Transformer Transformator Transformador	169539	169331
10	Volantino Volant Handwheel Handrad Volante	312053	312053
11	Manico Poignee Handle Handgriff Manija	312408	312408
12	Cuffia per fusibili Couvre fusibles Fuse cover Kasten fuer sicherungen Cubrefusibile	322051	322051
13	Pressacavo Presse cable Cable bushing Kabelhalter Prensa cable	322112	322112
14	Ruota Roue Wheel Rad Rueda	322193	322193
15	Tappo blocca ruota Bouchon ferme roue Wheel locking ring Radsperrestopfen Tapon de bloqueo rueda	322223	322223
16	Frontale Partie frontal Front panel Geraetefront Frontal	322801	322801
17	Piedino Embout Foot Fuss Pie	322803	322803
18	Cornice Cadre Frame Rahmen Marco	322804	322804
19	Tasca Poche Pocket Tasche Bolsillo	362051	362051
20	Asse per ruote Axes pour roue Wheels axle Raederachse Eje por rueda	422961	422961
21	Fondalino Chassis Bottom Boden Fondo	644177	644177
22	Kit cruscotto Kit tableau Dashboard kit Schaltbrett kit Kit cuadro	981254	980353
23	Colorado 150b pinza di massa 150a Colorado 150b pince de masse 150a Colorado 150b work clamp 150a Colorado 150b masseklemme 150a Colorado 150b pinza de masa 150a	712001	712001
24	Colorado 150r pinza positivo 150a Colorado 150r pince positiv 150a Colorado 150r positive clamp 150a Colorado 150r positive zange 150a Colorado 150r pinza positivo 150a	712002	712002
25	Fusibili lamella 80a 20 pz Fusibles 80a 20 pcs Fuses 80a 20 pcs Sicherungen 80a 20 stk Fusibles 80a 20 pz	802259	802260
26	Morsetto per fusibile Borne pour fusible Fuse holder Sicherungshalter Bocadillo para fusible	980036	980036
27	Kit retro Kit partie arriere Back panel kit Rueckseite kit Kit trasera	980301	980301
28	Kit raddrizzatore Kit redresseur Rectifier kit Gleichrichter kit Kit rectificador	990685	980303
29	Kit morsetto completo d.33mm Kit borne complete d.33mm Complete terminal kit d.33mm Komplet kabelklemme kit d.33mm Kit borne completo d.33mm	990162	990162
30	Kit coppia rondelle isolanti Kit rondelles isolantes Insulating washers kit Isolierscheibekit Kit arandelas asladoras	990163	990163
31	Cavo 16mmq 2m- positivo Cable 16mmq 2m- positive Cable 16mmq 2m- positive Kabel 16mmq 2m- positive Cable 16mmq 2m- positivo	980317	980318

Schema elettrico, Schéma électrique, Diagram, Schaltplan, Esquema de conexiones.

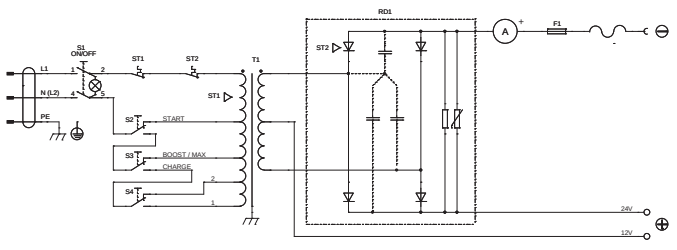

DYNAMIC 320 START

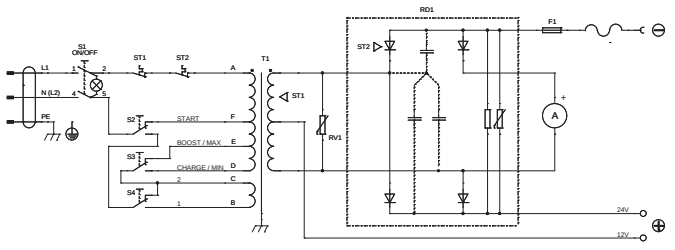

DYNAMIC 420 START

ELENCO PEZZI DI RICAMBIO
LISTE PIECES DETACHEES
SPARE PARTS LIST
ERSATZTEILLISTE
PIEZAS DE REPUESTO

DYNAMIC 520 START

TELWIN

Esploso macchina, Dessin appareil, Machine drawing, Explosions Zeichnung des Geräts, Diseño seccionado maquina.

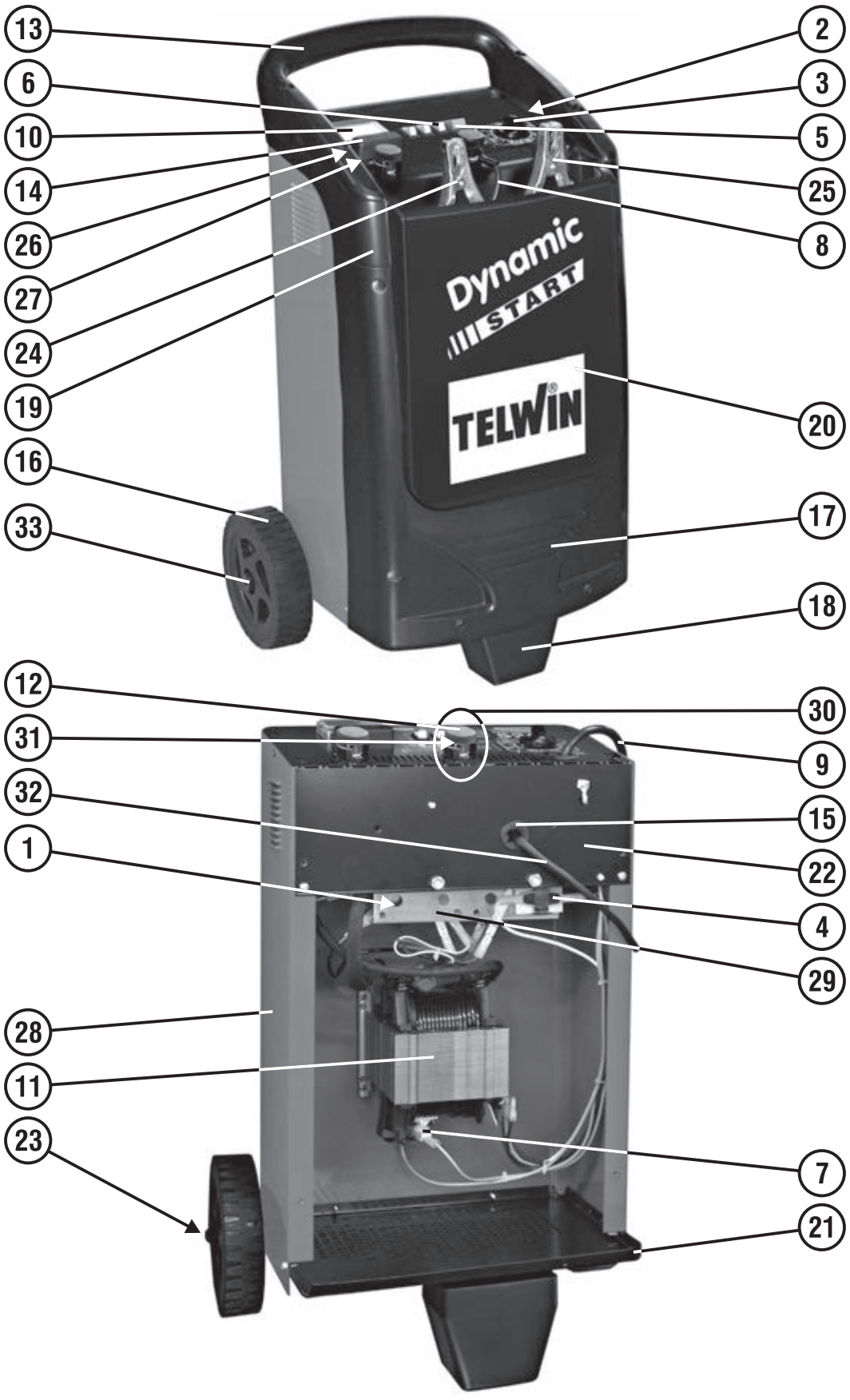

REF.	ELENCO PEZZI DI RICAMBIO PIECES DETACHEES SPARE PARTS LIST ERSATZTEILLISTE PIEZAS DE REPUESTO	CODICE CODE KODE
1	Protezione raddrizzatore Protection redresseur Rectifier protection Gleichrichterschutz Proteccion rectificador	112183
2	Temporizzatore Timer Timer Timer Timer	112218
3	Manopola per temporizzatore Poignee pour timer Knob for timer Griff fuer timer Manija para timer	112296
4	Kit termostato Kit thermostat Kit thermostat Thermostat Kit termostato	981967
5	Interruttore Interrupteur Switch Schalter Interruptor	122381
6	Deviatore Gareur Switch Schalter Interruptor	122400
7	Termostato Thermostat Thermostat Thermostat Termostato	121716
8	Cavo 16mmq 2m- positivo Cable 16mmq 2m- positive Cable 16mmq 2m- positive Kabel 16mmq 2m- positive Cable 16mmq 2m- positivo	980318
9	Cavo alim. 3g2.5 2 M spina schuko Cable alim. 3g2.5 2 M fiche schuko Mains cable 3g2.5 2 M schuko plug Netzkabel 3g2.5 2 M schuko stecker Cable alim. 3g2.5 2 M espina schuko	132009
10	Amperometro Amperemetre Ammeter Amperemeter Amperimetro	152248
11	Trasformatore Transformateur Transformer Transformator Transformador	169331
12	Volantino Volant Handwheel Handrad Volante	312053
13	Manico Poignee Handle Handgriff Manija	312399
14	Cuffia per fusibili Couvre fusibles Fuse cover Kasten fuer sicherungen Cubrefusibile	322051
15	Pressacavo Presse cable Cable bushing Kabelhalter Prensa cable	322112
16	Ruota fissa Roue fixe Fixed wheel Fixes rad Rueda firme	322201
17	Frontale Partie frontal Front panel Geraetefront Frontal	322796
18	Piedino Embout Foot Fuss Pie	322798
19	Cornice Cadre Frame Rahmen Marco	322799
20	Tasca Poche Pocket Tasche Bolsillo	362052
21	Fondo Chassis Bottom Bodenteil Fondo	644783
22	Kit cruscotto Kit tableau Dashboard kit Schaltbrett kit Kit cuadro	981256
23	Asse per ruote Axe roues Wheels axle Radachse Eje ruedas	681055
24	Colorado 150b pinza di massa 150a Colorado 150b pince de masse 150a Colorado 150b work clamp 150a Colorado 150b masseklemme 150a Colorado 150b pinza de masa 150a	712001
25	Colorado 150r pinza positivo 150a Colorado 150r pince positiv 150a Colorado 150r positive clamp 150a Colorado 150r positive zange 150a Colorado 150r pinza positivo 150a	712002
26	Fusibili lamella 80a 20 pz Fusibles 80a 20 pcs Fuses 80a 20 pcs Sicherungen 80a 20 stk Fusibles 80a 20 pz	802260
27	Morsetto per fusibile Borne pour fusible Fuse holder Sicherungshalter Bocadillo para fusible	980036
28	Kit retro Kit partie arriere Back panel kit Rueckseite kit Kit trasera	980302
29	Kit raddrizzatore Kit redresseur Rectifier kit Gleichrichter kit Kit rectificador	990902
30	Kit morsetto completo d.33mm Kit borne complete d.33mm Complete terminal kit d.33mm Komplet kabelklemme kit d.33mm Kit borne completo d.33mm	990162
31	Kit coppia rondelle isolanti Kit rondelles isolantes Insulating washers kit Isolierscheibekit Kit arandelas asladoras	990163
32	Cavo 16mmq 2m- massa Cable 16mmq 2m- masse Cable 16mmq 2m- earth Kabel 16mmq 2m- masse Cable 16mmq 2m- mase	980366
33	Tappo blocca ruote Bouchon ferme roue Wheel locking ring Radsperrestopfen Tapon de bloqueo rueda	322102

Schema elettrico, Schéma électrique, Diagram, Schaltplan, Esquema de conexiones.

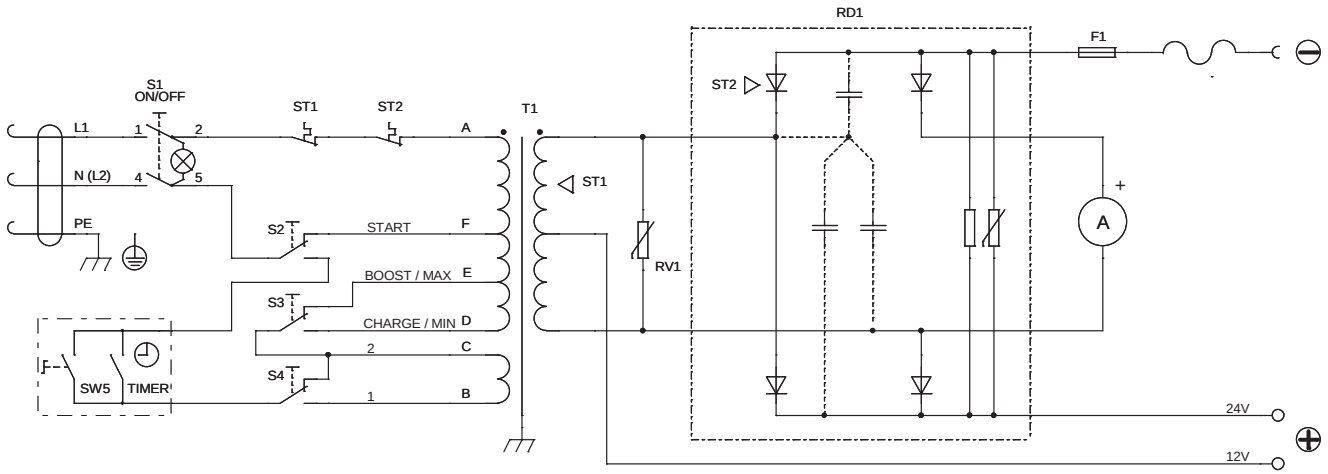

ELENCO PEZZI DI RICAMBIO
LISTE PIECES DETACHEES
SPARE PARTS LIST
ERSATZTEILLISTE
PIEZAS DE REPUESTO

DYNAMIC 620 START

TELWIN

Esploso macchina, Dessin appareil, Machine drawing, Explosions Zeichnung des Geräts, Diseño seccionado maquina.

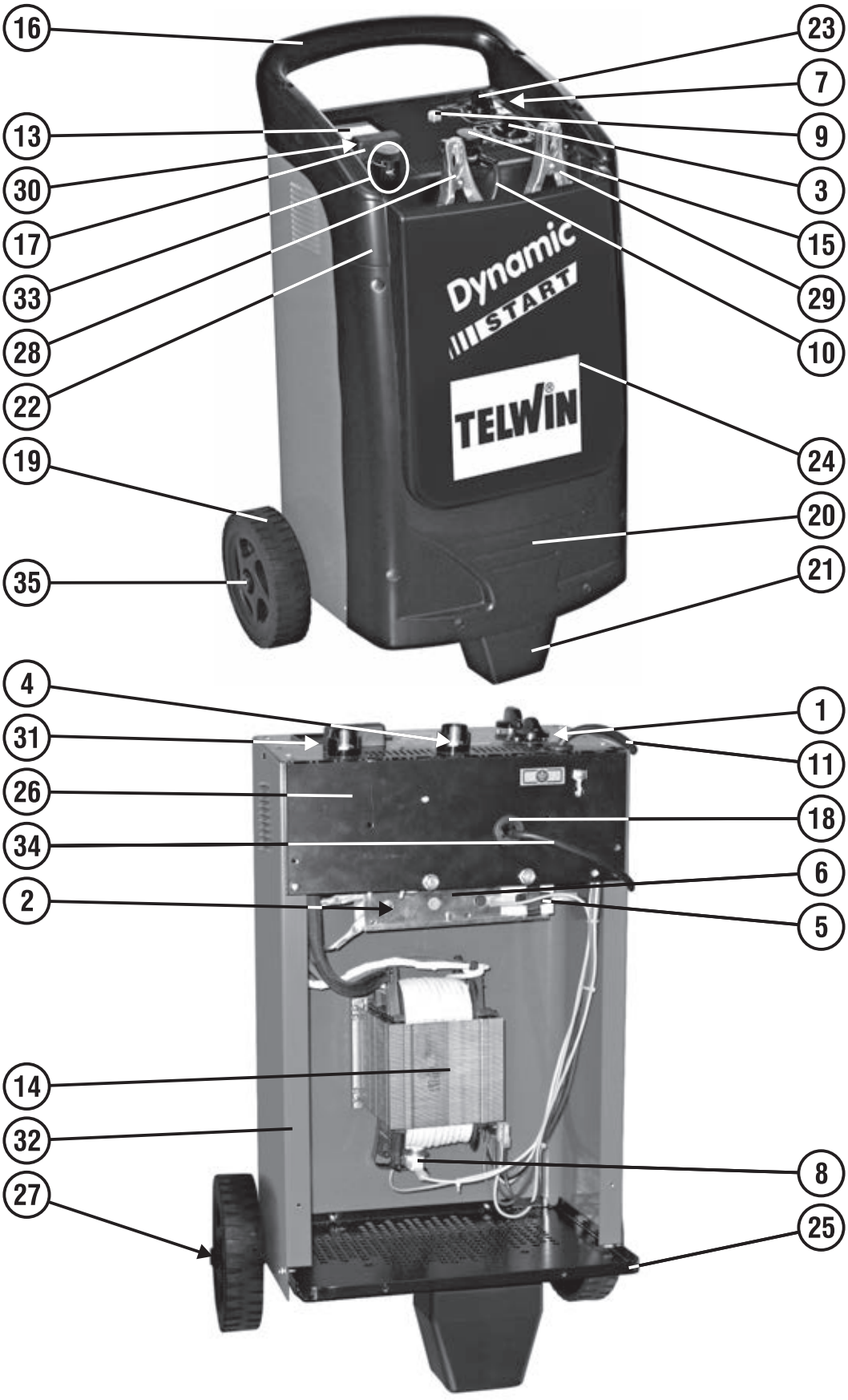

REF.	ELENCO PEZZI DI RICAMBIO PIECES DETACHEES SPARE PARTS LIST ERSATZTEILLISTE PIEZAS DE REPUESTO	CODICE CODE KODE
1	Kit temporizzatore Kit temporisateur Timer kit Timer kit Kit timer	982451
2	Protezione raddrizzatore Protection redresseur Rectifier protection Gleichrichterschutz Proteccion rectificador	112183
3	Manopola per temporizzatore Poignee pour timer Knob for timer Griff fuer timer Manija para timer	112296
4	Kit coppia rondelle isolanti Kit rondelles isolantes Insulating washers kit Isolierscheibekit Kit arandelas asladoras	990163
5	Kit termostato Kit thermostat Kit thermostat Thermostat Kit termostato	981967
6	Kit raddrizzatore Kit redreesseur Rectifier kit Gleichrichter kit Kit rectificador	980056
7	Commutatore Commutateur Switch Schalter Conmutador	121504
8	Termostato Thermostat Thermostat Thermostat Termostato	121716
9	Lampada Temoin lumineux Pilot lamp Kontrollampe Lampara	122546
10	Cavo 16mmq 2m- positivo Cable 16mmq 2m- positive Cable 16mmq 2m- positive Kabel 16mmq 2m- positive Cable 16mmq 2m- positivo	980318
11	Cavo alim. 3g2.5 2 M Cable alim. 3g2.5 2 M Mains cable 3g2.5 2 M Netzkabel 3g2.5 2 M Cable alim. 3g2.5 2 M	132064
13	Amperometro Amperemetre Ammeter Amperemeter Amperimetro	152134
14	Kit trasformatore Kit transformateur Transformer kit Transformator kit Kit transformador	980055
15	Volantino Volant Handwheel Handrad Volante	312053
16	Manico Poignee Handle Handgriff Manija	312399
17	Cuffia per fusibili Couvre fusibles Fuse cover Kasten fuer sicherungen Cubrefusibile	322051
18	Pressacavo Presse cable Cable bushing Kabelhalter Prensa cable	322112
19	Ruota fissa Roue fixe Fixed wheel Fixes rad Rueda firme	322201
20	Frontale Partie frontal Front panel Geraetefront Frontal	322796
21	Piedino Embout Foot Fuss Pie	322798
22	Cornice Cadre Frame Rahmen Marco	322799
23	Assieme manopola per commutatore Set poigne pour commutateur Switch knob set Umschaltergriff set Set manjia para conmutador	323101
24	Tasca Poche Pocket Tasche Bolsillo	362052
25	Fondo Chassis Bottom Bodenteil Fondo	644783
26	Kit cruscotto Kit tableau Dashboard kit Schaltbrett kit Kit cuadro	981576
27	Asse per ruote Axe roues Wheels axle Radachse Eje ruedas	681055
28	Colorado 150b pinza di massa 150a Colorado 150b pince de masse 150a Colorado 150b work clamp 150a Colorado 150b masseklemme 150a Colorado 150b pinza de masa 150a	712001
29	Colorado 150r pinza positivo 150a Colorado 150r pince positiv 150a Colorado 150r positive clamp 150a Colorado 150r positive zange 150a Colorado 150r pinza positivo 150a	712002
30	Fusibili lamella 100a 20 pz Fusibles 100a 20 pcs Fuses 100a 20 pcs Sicherungen 100a 20 stk Fusibles 100a 20 pz	802029
31	Kit morsetto per fusibile Kit borne pour fuse Fuse clamp kit Sicherungsklemme kit Kit borne fusible	990595
32	Kit retro Kit partie arriere Back panel kit Rueckseite kit Kit trasera	980302
33	Kit morsetto completo d.33mm Kit borne complete d.33mm Complete terminal kit d.33mm Komplet kabelklemme kit d.33mm Kit borne completo d.33mm	990162
34	Kit cavo 16mmq 2m Kit cable 16mmq 2m Cable kit 16mmq 2m Kabel kit 16mmq 2m Kit cable 16mmq 2m	981575
35	Tappo blocca ruote Bouchon ferme roue Wheel locking ring Radsperrestopfen Tapon de bloqueo rueda	322102

Schema elettrico, Schéma électrique, Diagram, Schaltplan, Esquema de conexiones.

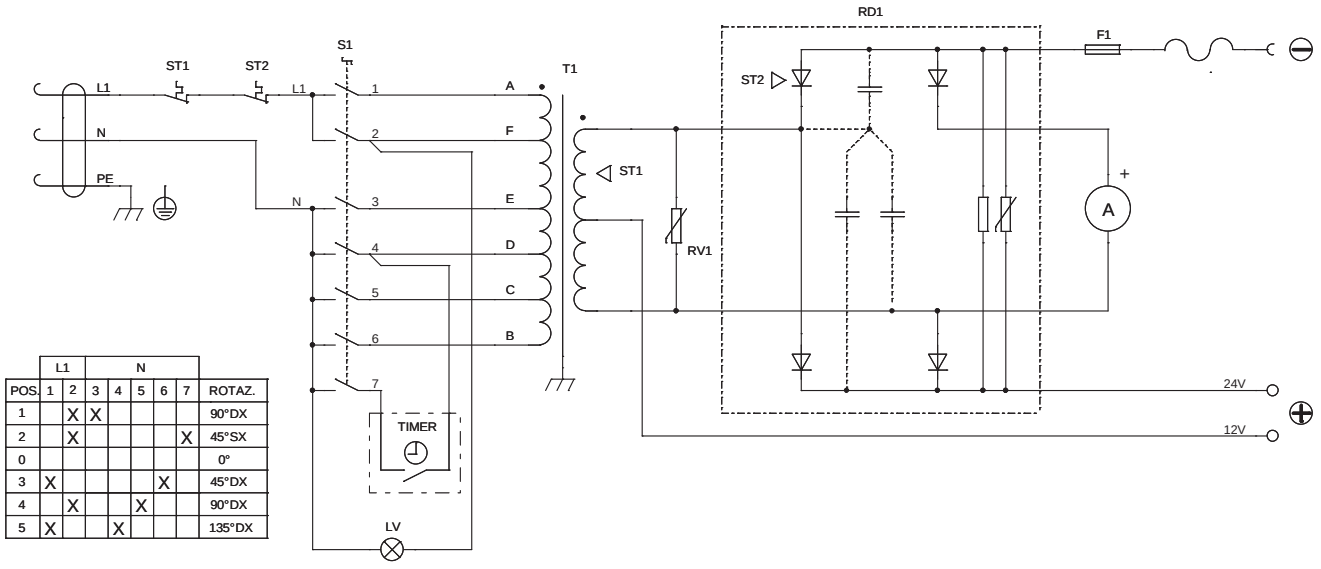

POS.	L1		N					ROTAZ.
	1	2	3	4	5	6	7	
1		X	X					90°DX
2		X					X	45°SX
0								0°
3	X					X		45°DX
4		X			X			90°DX
5	X			X				135°DX

ELENCO PEZZI DI RICAMBIO
LISTE PIECES DETACHEES
SPARE PARTS LIST
ERSATZTEILLISTE
PIEZAS DE REPUESTO

ENERGY 650 START

TELWIN

Esploso macchina, Dessin appareil, Machine drawing, Explosions Zeichnung des Geräts, Diseño seccionado maquina.



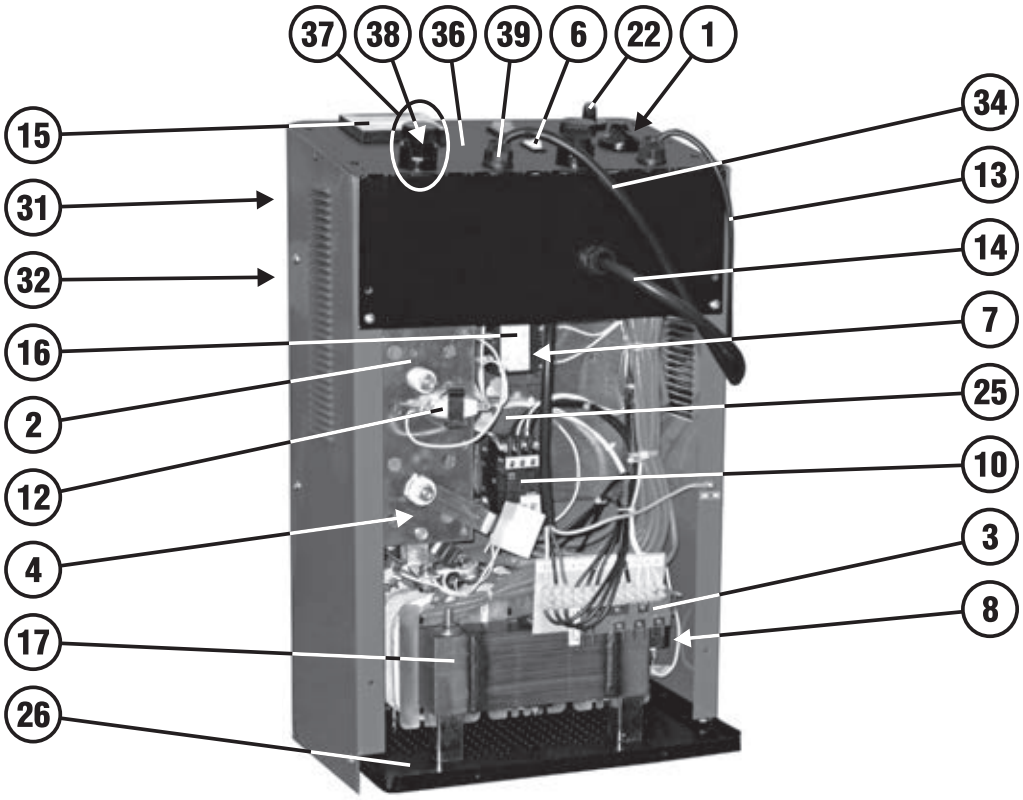

REF.	ELENCO PEZZI DI RICAMBIO PIECES DETACHEES SPARE PARTS LIST ERSATZTEILLISTE PIEZAS DE REPUESTO	CODICE CODE KODE
1	Temporizzatore 16a 250v 60mn su 300° Temporisateur 16a 250v 60mn su 300° Timer 16a 250v 60mn su 300° Zeitschalter 16a 250v 60mn su 300° Temporizador 16a 250v 60mn su 300°	112013
2	Raddrizzatore Redresseur Rectifier Gleichrichter Rectificador	112131
3	Basetta cambio tensione Platine pour changer tension Changing voltage card Wechselspannungskarte Base cambio tension	112165
4	Protezione raddrizzatore Protection redresseur Rectifier protection Gleichrichterschutz Protector rectificador	112182
5	Manopola per temporizzatore Poignee pour timer Knob for timer Griff fuer timer Manija para timer	112296
6	Deviatore Gareur Switch Schalter Interruptor	122400
7	Fusibile Fusible Fuse Sicherung Fusible	122432
8	Termostato Thermostat Thermostat Thermostat Termostato	121716
9	Commutatore Commutateur Switch Schalter Conmutador	122649
10	Teleruttore Telerupteur Contactor Schuetz Contactor	122694
11	Interruttore Interrupteur Switch Schalter Interruptor	122725
12	Kit termostato Kit thermostat Kit thermostat Kit thermostat Kit termostato	982000
13	Comando a distanza 6 m Commande a distance 6 m Remote control 6 m Fernsteuerung 6 m Comando de distancia 6 m	123993
14	Cavo alim. 4g2.5 2 M Cable alim. 4g2.5 2 M Mains cable 4g2.5 2 M Netzkabel 4g2.5 2 M Cable alim. 4g2.5 2 M	132244

REF.	ELENCO PEZZI DI RICAMBIO PIECES DETACHEES SPARE PARTS LIST ERSATZTEILLISTE PIEZAS DE REPUESTO	CODICE CODE KODE
15	Amperometro Amperemetre Ammeter Amperemeter Amperimetro	152134
16	Trasformatore ausiliario Transformateur auxiliaire Auxiliary transformer Hilfstransformator Transformador ausiliario	164270
17	Trasformatore Transormateur Transformer Transformator Transformador	164709
18	Manico Poignee Handle Handgriff Manija	312399
19	Frontale Partie frontal Front panel Geraetefront Frontal	322796
20	Piedino Embout Foot Fuss Pie	322798
21	Cornice Cadre Frame Rahmen Marco	322799
22	Assieme manopola per commutatore Set poigne pour commutateur Switch knob set Umschaltergriff set Set manjia para conmutador	323101
23	Tasca Poche Pocket Tasche Bolsillo	362032
24	Scatola portafusibile Boite suport fusible Fuseholder box Sicherungshalter schachtel Caja sosten fusible	483899
25	Kit diaframma Kit diaphragme Diaphragm kit Diaphragma kit Kit diafragma	980528
26	Fondo Chassis Bottom Bodenteil Fondo	645343
27	Mascherina coprifusibile Couvercle fusible Fuse cover Sicherungsdeckel Cubrefusible	650557
28	Asse per ruote Axe roues Wheels axle Radachse Eje ruedas	681055

REF.	ELENCO PEZZI DI RICAMBIO PIECES DETACHEES SPARE PARTS LIST ERSATZTEILLISTE PIEZAS DE REPUESTO	CODICE CODE KODE
29	Pinza positivo (+) Pince positiv (+) Positive clamp (+) Positive zange (+) Pinza positivo (+)	712025
30	Pinza di massa Pince de masse Work clamp Masseklemme Pinza de masa	712026
31	Fusibili lamella 100a 10 pz Fusibles 100a 10 pcs Fuses 100a 10 pcs Sicherungen 100a 10 stk Fusibles 100a 10 pz	802131
32	Morsetto per fusibile Borne pour fusible Fuse holder clamp Sicherungshalter klemme Bocadillo para fusible	980037
33	Cavo positivo 25 mmq 2,5 m Cable positive 25 mmq 2,5 m Positive cable 25 mmq 2,5 m Kabel positive 25 mmq 2,5 m Cable positivo 25 mmq 2,5 m	980485
34	Cavo negativo 25 mmq 3 m Cable negative 25 mmq 3 m Negative cable 25 mmq 3 m Kabel negative 25 mmq 3 m Cable negativo 25 mmq 3 m	980486
35	Kit retro Kit partie arriere Back panel kit Rueckseite kit Kit trasera	980487
36	Kit cruscotto Kit tableau Dashboard kit Schaltbrett kit Kit cuadro	980488
37	Kit morsetto completo d.33mm Kit borne complete d.33mm Complete terminal kit d.33mm Komplet kabelklemme kit d.33mm Kit borne completo d.33mm	990162
38	Kit coppia rondelle isolanti Kit rondelles isolantes Insulating washers kit Isolierscheibekit Kit arandelas asladoras	990163
39	Kit pressacavo Kit presse cable Cable bushing kit Kabelhalter kit Kit prensa cable	990439
40	Tappo blocca ruote Bouchon ferme roue Wheel locking ring Radsperrestopfen Tapon de bloqueo rueda	322102
41	Ruota fissa Roue fixe Fixed wheel Fixes rad Rueda firme	322201

Schema elettrico, Schéma électrique, Diagram, Schaltplan, Esquema de conexiones.

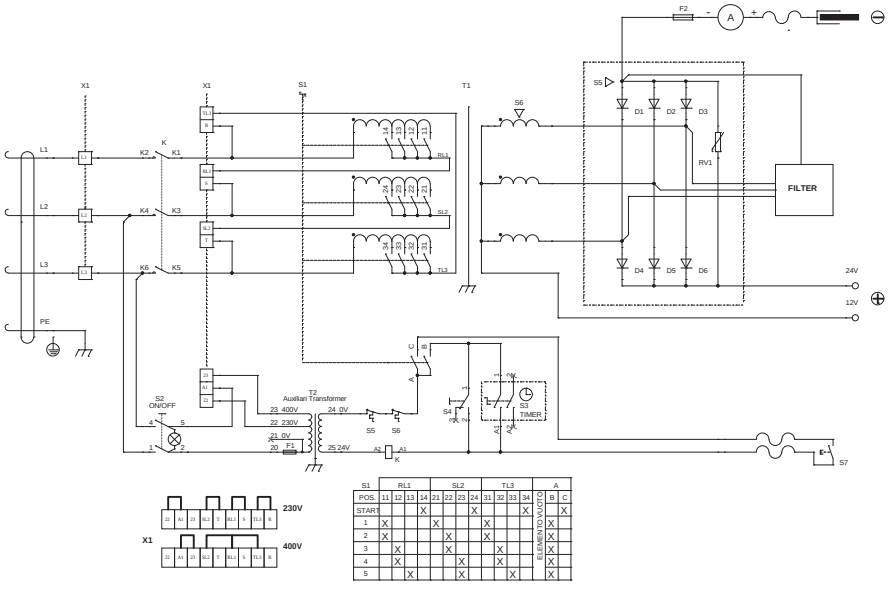

ELENCO PEZZI DI RICAMBIO
LISTE PIECES DETACHEES
SPARE PARTS LIST
ERSATZTEILLISTE
PIEZAS DE REPUESTO

ENERGY 1000 START

TELWIN®

Esploso macchina, Dessin appareil, Machine drawing, Explosions Zeichnung des Geräts, Diseño seccionado maquina.

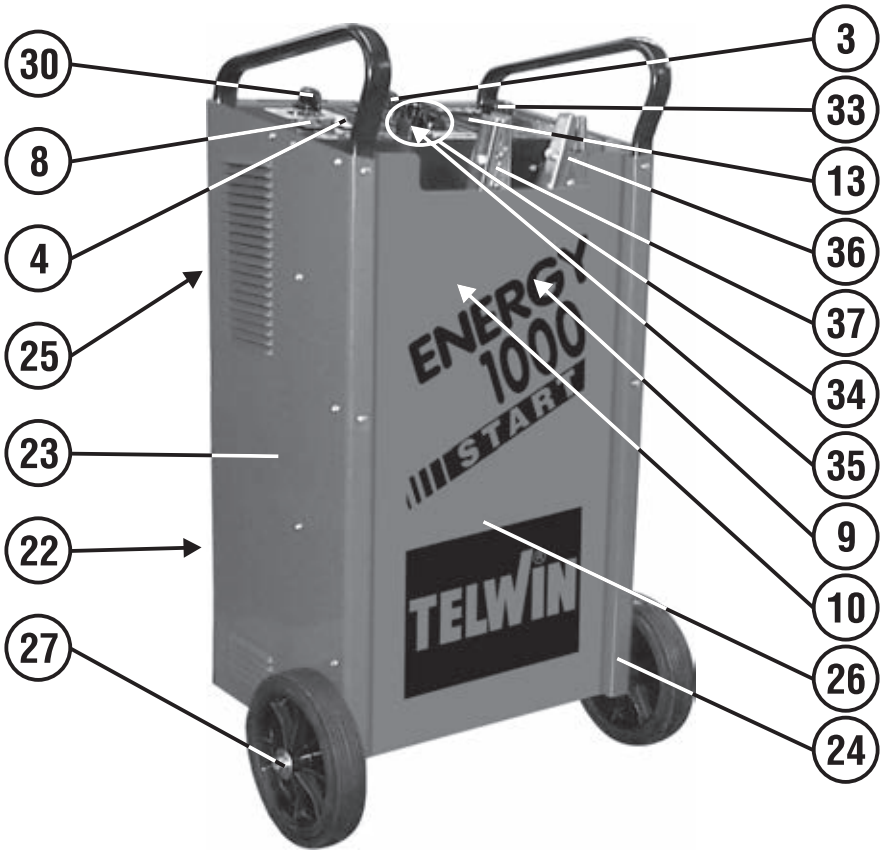

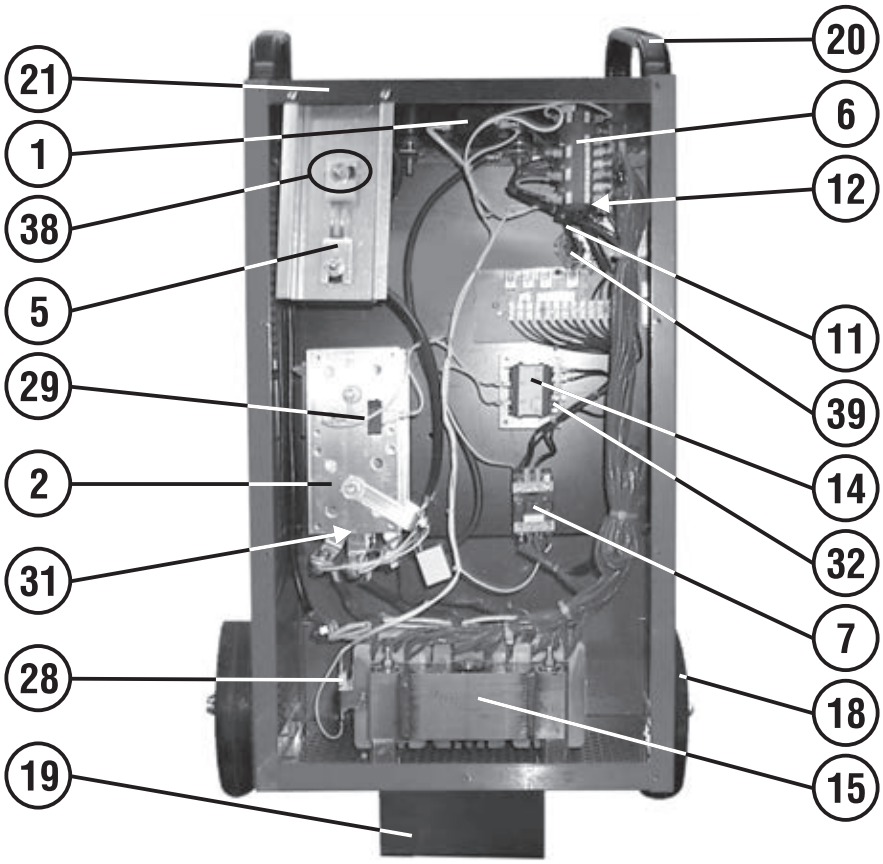

REF.	ELENCO PEZZI DI RICAMBIO PIECES DETACHEES SPARE PARTS LIST ERSATZTEILLISTE PIEZAS DE REPUESTO	CODICE CODE KODE
1	Kit temporizzatore Kit temporisateur Timer kit Timer kit Kit timer	982450
2	Raddrizzatore Redresseur Rectifier Gleichrichter Rectificador	112131
3	Manopola per temporizzatore Poignee pour timer Knob for timer Griff fuer timer Manija para timer	112296
4	Deviatore Gareur Switch Schalter Interruptor	122400
5	Fusibili lamella 300a 10 pz Fusibles 300a 10 pcs Fuses 300a 10 pcs Sicherungen 300a 10 stk Fusibles 300a 10 pz	802129
6	Commutatore Commutateur Switch Schalter Conmutador	122649
7	Teleruttore Telerupteur Contactor Schuetz Contactor	122694
8	Interruttore Interrupteur Switch Schalter Interruptor	122725
9	Cavo 25 mmq 3 m Cable 25 mmq 3 m Cable 25 mmq 3 m Kabel 25 mmq 3 m Cable 25 mmq 3 m	123467
10	Cavo 25 mmq 2,5 m Cable 25 mmq 2,5 m Cable 25 mmq 2,5 m Kabel 25 mmq 2,5 m Cable 25 mmq 2,5 m	123456
11	Comando a distanza 6 m Commande a distance 6 m Remote control 6 m Fernsteuerung 6 m Comando de distancia 6 m	123993
12	Cavo alim. 4g2.5 2 M Cable alim. 4g2.5 2 M Mains cable 4g2.5 2 M Netzkabel 4g2.5 2 M Cable alim. 4g2.5 2 M	132244
13	Amperometro Amperemetre Ammeter Amperemeter Amperimetro	152134
14	Trasformatore ausiliario Transformateur auxiliaire Auxiliary transformer Hilfstransformator Transformador ausiliario	164270

REF.	ELENCO PEZZI DI RICAMBIO PIECES DETACHEES SPARE PARTS LIST ERSATZTEILLISTE PIEZAS DE REPUESTO	CODICE CODE KODE
15	Trasformatore Transormateur Transformer Transformator Transformador	164709
18	Ruota Roue Wheel Rad Rueda	321390
19	Piedino Embout Foot Fuss Pie	644296
20	Manico Poignee Handle Handgriff Manija	644579
21	Cruscotto Tableau Dashboard Schaltbrett Cuadro	649233
22	Retro Partie arriere Back panel Rueckseite Trasera	650365
23	Fianco destro Partie lateral droite Right side panel Rechte seite Flanco derecho	650487
24	Fianco sinistro Partie laterale gauche Left side Linke seite Flanco izquierdo	650488
25	Mascherina coprifusibile Masque fusible Fuse cover Sicherungsschutz Mascara fusible	655627
26	Frontale Partie frontal Front panel Geraetefront Frontal	655192
27	Asse per ruote Axes pour roue Wheels axle Raederachse Eje por rueda	681139
28	Termostato Thermostat Thermostat Thermostat Termostato	121716
29	Kit termostato Kit thermostat Kit thermostat Kit thermostat Kit termostato	982000
30	Assieme manopola per commutatore Set poigne pour commutateur Switch knob set Umschaltergriff set Set manjia para conmutador	323101

REF.	ELENCO PEZZI DI RICAMBIO PIECES DETACHEES SPARE PARTS LIST ERSATZTEILLISTE PIEZAS DE REPUESTO	CODICE CODE KODE
31	Protezione raddrizzatore Protection redresseur Rectifier protection Gleichrichterschutz Protector rectificador	112182
32	Fusibile Fusible Fuse Sicherung Fusible	122432
33	Volantino Volant Handwheel Handrad Volante	312053
34	Kit morsetto completo d.33mm Kit borne complete d.33mm Complete terminal kit d.33mm Komplet kabelklemme kit d.33mm Kit borne completo d.33mm	990162
35	Kit coppia rondelle isolanti Kit rondelles isolantes Insulating washers kit Isolierscheibekit Kit arandelas asladoras	990163
36	Pinza positivo (+) Pince positiv (+) Positive clamp (+) Positive zange (+) Pinza positivo (+)	712025
37	Pinza di massa Pince de masse Work clamp Masseklemme Pinza de masa	712026
38	Morsetto per fusibile Borne pour fusible Fuse holder clamp Sicherungshalter klemme Bocadillo para fusible	980037
39	Kit pressacavo + ghiera Kit presse cable + embout Kit cable bushing + ring nut Kit kabelhalter + nutmutter Kit prensa cable + virola	990046

Schema elettrico, Schéma électrique, Diagram, Schaltplan, Esquema de conexiones.

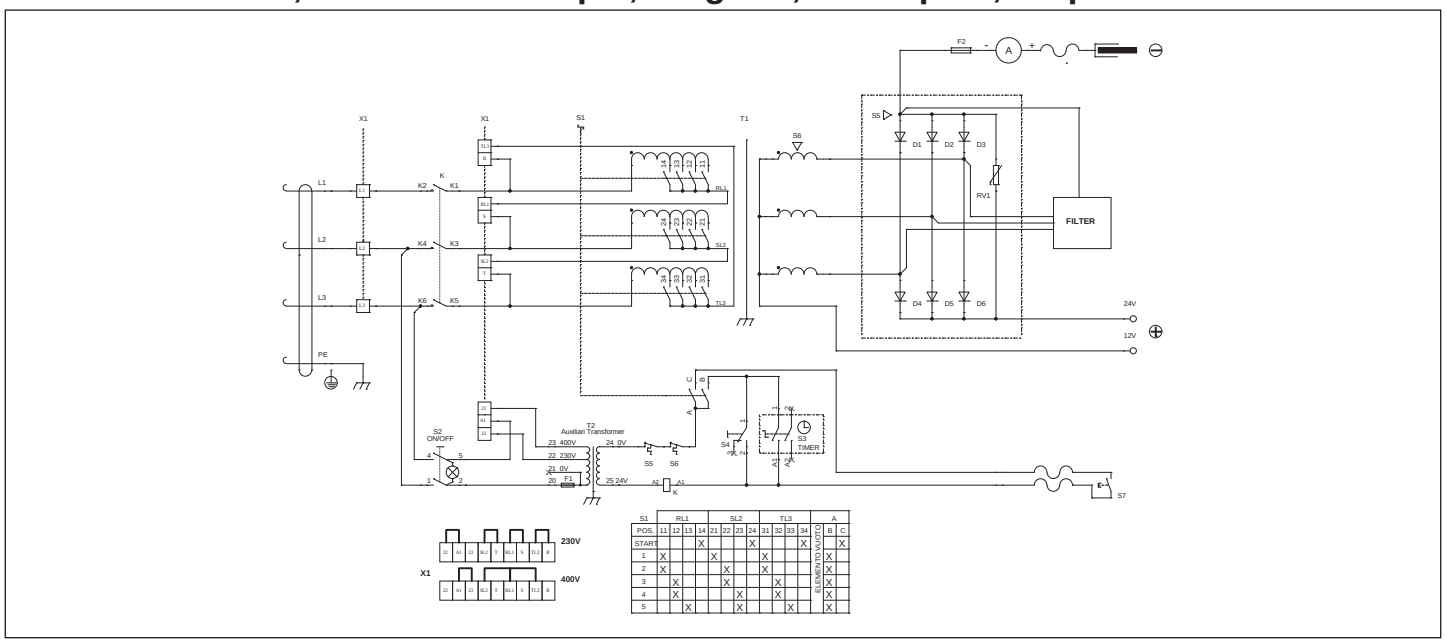

ELENCO PEZZI DI RICAMBIO
LISTE PIECES DETACHEES
SPARE PARTS LIST
ERSATZTEILLISTE
PIEZAS DE REPUESTO

ENERGY 1500 START

TELWIN

Esploso macchina, Dessin appareil, Machine drawing, Explosions Zeichnung des Geräts, Diseño seccionado maquina.

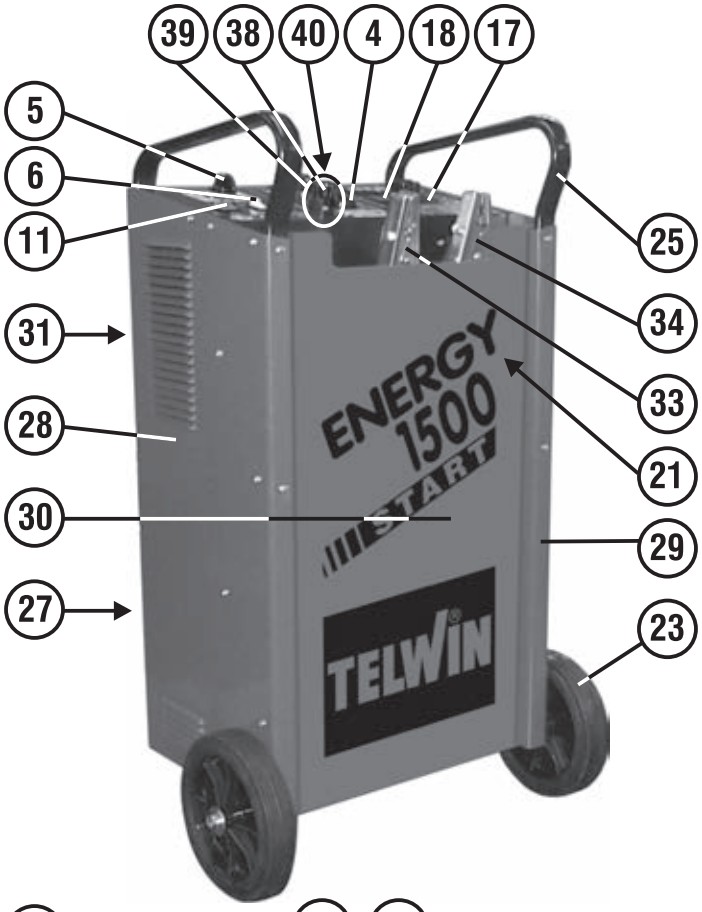

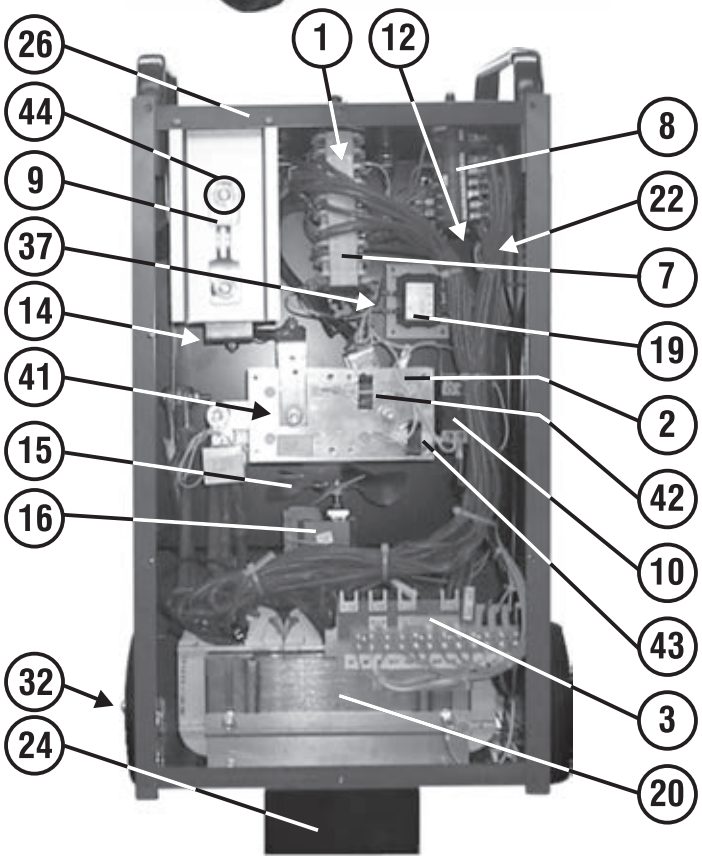

REF.	ELENCO PEZZI DI RICAMBIO PIECES DETACHEES SPARE PARTS LIST ERSATZTEILLISTE PIEZAS DE REPUESTO	CODICE CODE KODE
1	Kit temporizzatore Kit temporisateur Timer kit Timer kit Kit timer	982450
2	Raddrizzatore Redresseur Rectifier Gleichrichter Rectificador	112390
3	Basetta cambio tensione Platine pour change tension Voltage changing card Wechselspannungkarte Base cambio tension	112163
4	Manopola per temporizzatore Poignee pour timer Knob for timer Griff fuer timer Manija para timer	112296
5	Assieme manopola per commutatore Set poigne pour commutateur Switch knob set Umschaltergriff set Set manjia para conmutador	323101
6	Deviatore Gareur Switch Schalter Interruptor	122400
7	Commutatore Commutateur Switch Schalter Conmutador	122489
8	Commutatore Commutateur Switch Schalter Conmutador	122490
9	Fusibili lamella 300a 10 pz Fusibles 300a 10 pcs Fuses 300a 10 pcs Sicherungen 300a 10 stk Fusibles 300a 10 pz	802129
10	Teleruttore Telerupteur Contactor Fernschalter Contactor	122585
11	Interruttore Interrupteur Switch Schalter Interruptor	122725
12	Comando a distanza 6 m Commande a distance 6 m Remote control 6 m Fernsteuerung 6 m Comando de distancia 6 m	123993
13	Cavo alim. 4g4 2.5 M Cable alim. 4g4 2.5 M Mains cable 4g4 2.5 M Netzkabel 4g4 2.5 M Cable alim. 4g4 2.5 M	132166
14	Shunt per amperometro Shunt pour amperemetre Shunt for ammeter Shunt fuer ampermeter Shunt para amperometro	152040
15	Ventola Helice Fan blade Fluegelrad Aventador	152054
16	Motore ventilatore Moteur ventilateur Fan motor Ventilatormotor Motor ventilacion	152110
17	Mascherina amperometro Couvercle amperemetre Ammeter cover Amperemetersdeckel Cubre amperimetre	152087
18	Amperometro Amperemetre Ammeter Amperemeter Amperometre	152098
19	Trasformatore ausiliario Transformateur auxiliaire Auxiliary transformer Hilfstransformator Transformador ausiliario	164270
20	Trasformatore Transformateur Transformer Transformator Trasformador	164699
21	Pressacavo Presse cable Cable bushing Kabelhalter Prensa cable	312068
22	Pressacavo Presse cable Cable bushing Kabelhalter Prensa cable	322112
23	Ruota Roue Wheel Rad Rueda	321390
24	Piedino Embout Foot Fuss Pie	644296
25	Manico Poignee Handle Handgriff Manija	644579
26	Cruscotto Tableau Dashboard Schaltbrett Cuadro	642327
27	Retro Partie arriere Back panel Rueckseite Trasera	650365
28	Fianco destro Partie lateral droite Right side panel Rechte seite Flanco derecho	650487
29	Fianco sinistro Partie laterale gauche Left side Linke seite Flanco izquierdo	650488
30	Frontale Partie frontal Front panel Geraetefront Frontal	655191
31	Mascherina coprifusibile Masque fusible Fuse cover Sicherungsschutz Mascara fusible	655621
32	Asse per ruote Axes pour roue Wheels axle Raederachse Eje por rueda	681139
33	Pinza di massa (+) Pince de masse (+) Work clamp (+) Masseklemme (+) Pinza de masa (+)	712101
34	Pinza di massa (-) Pince de masse (-) Work clamp (-) Masseklemme (-) Pinza de masa (-)	712102
35	Cavo 50mmq 3m-pinza positivo-occhie.Ø10 Cable 50mmq 3m-pince positive-cosse ø10 Cable 50mmq 3m-positive clamp-eyelet ø10 Kabel 50mmq 3m-positive zange-augen ø10 Cable 50mmq 3m-pinza positivo-oiete ø10	713162
36	Cavo 50mmq 3m-pinza di massa Cable 50mmq 3m-pince de masse Cable 50mmq 3m-work clamp Kabel 50mmq 3m-massezange Cable 50mmq 3m-pinca de masa	713260
37	Fusibile Fusible Fuse Sicherung Fusible	122432
38	Volantino per morsetto Volant pour borne Knob for clamp Handrad fuer klemme Volante por borne	312024
39	Morsetto completo Borne complete Complete terminal Komplet kabelklemme Borne completo	990057
40	Kit coppia rondelle isolanti Kit rondelles isolantes Insulating washers kit Isolierscheibekit Kit arandelas asladoras	990163
41	Protezione raddrizzatore Protection redresseur Rectifier protection Gleichrichterschutz Protector rectificador	112182
42	Kit termostato Kit thermostat Kit thermostat Thermostat kit Kit termostato	981968
43	Termostato Thermostat Thermostat Thermostat Termostato	121714
44	Morsetto per fusibile Borne pour fusible Fuse holder clamp Sicherungshalter klemme Bocadillo para fusible	980037

Schema elettrico, Schéma électrique, Diagram, Schaltplan, Esquema de conexiones.

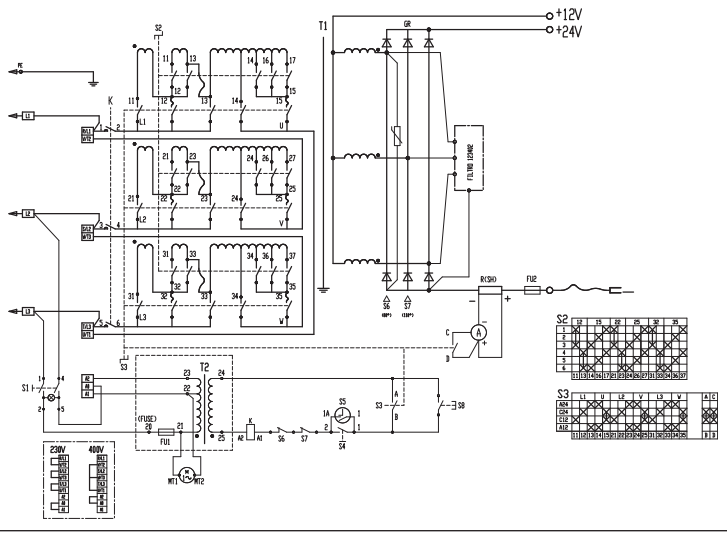

ELENCO PEZZI DI RICAMBIO
LISTE PIECES DETACHEES
SPARE PARTS LIST
ERSATZTEILLISTE
PIEZAS DE REPUESTO

STARTZILLA 4012 XT

Esploso macchina, Dessin appareil, Machine drawing, Explosions Zeichnung des Geräts, Diseño seccionado maquina.



REF.	ELENCO PEZZI DI RICAMBIO PIECES DETACHEES SPARE PARTS LIST ERSATZTEILLISTE PIEZAS DE REPUESTO	CODICE CODE KODE
1	Fusibile 200a 400k aas Fusible 200a 400k aas Fuse 200a 400k aas Sicherung 200a 400k aas Fusible 200a 400k aas	121818
2	Alimentatore multispina Chargeur multiprise Multi plug power supply Multi-stecker-netzteil Cargador multi enchufe	169999
4	Set manico nero Set poignee noir Black handle set Schwarzer griff set Set manija negra	321433
5	Kit scheda - no pulsante led Kit fiche - sans touche led Board kit - without led button Karte kit - ohne led-taste Kit tarjeta - sin botón led	982332
5	Kit scheda Kit platine Board kit Karte kit Kit tarjeta	982482
6	Kit batteria Kit batterie Battery kit Batterien kit Kit baterias	982333
7	Kit cavo + pinza positivo Kit cable + pince positif Positive cable + clamp kit Positive kabel + klemme kit Kit cable + pinca positivo	982335
8	Kit cavo + pinza negativo Kit cable + pince negatif Negative cable + clamp kit Negative kabel + klemme kit Kit cable + pinca negativo	982336
9	Kit frontale Kit partie frontal Front panel kit Gerätefront kit Kit frontal	982486
10	Kit morsetto per fusibile Kit borne pour fuse Fuse clamp kit Sicherungsklemme kit Kit borne fusible	990595
11	Kit retro Kit partie arriere Back panel kit Rückseite kit Kit trasera	982484

REF.	ELENCO PEZZI DI RICAMBIO PIECES DETACHEES SPARE PARTS LIST ERSATZTEILLISTE PIEZAS DE REPUESTO	CODICE CODE KODE

REF.	ELENCO PEZZI DI RICAMBIO PIECES DETACHEES SPARE PARTS LIST ERSATZTEILLISTE PIEZAS DE REPUESTO	CODICE CODE KODE

Schema elettrico, Schéma électrique, Diagram, Schaltplan, Esquema de conexiones.

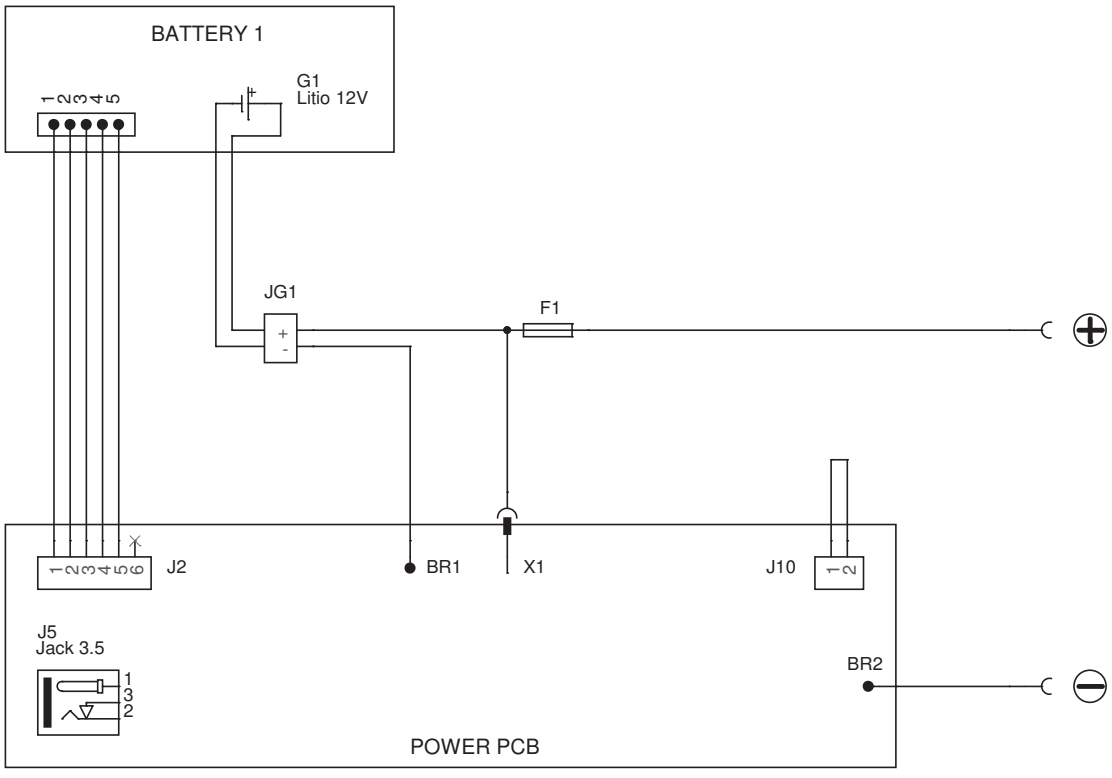

ELENCO PEZZI DI RICAMBIO
LISTE PIECES DETACHEES
SPARE PARTS LIST
ERSATZTEILLISTE
PIEZAS DE REPUESTO

STARTZILLA 9012 XT

Esploso macchina, Dessin appareil, Machine drawing, Explosions Zeichnung des Geräts, Diseño seccionado maquina.

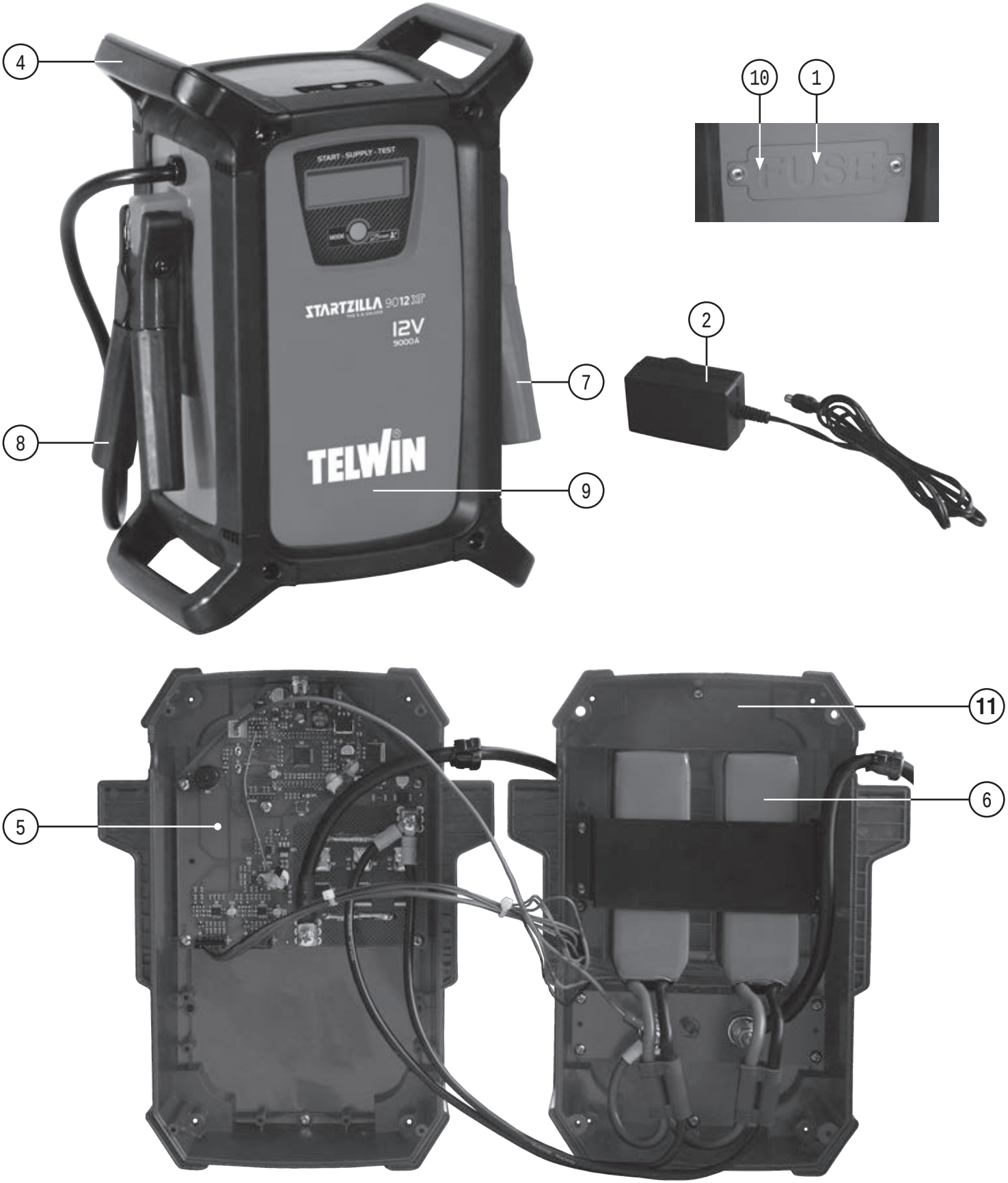

REF.	ELENCO PEZZI DI RICAMBIO PIECES DETACHEES SPARE PARTS LIST ERSATZTEILLISTE PIEZAS DE REPUESTO	CODICE CODE KODE
1	Fusibile 200a 400k aas Fusible 200a 400k aas Fuse 200a 400k aas Sicherung 200a 400k aas Fusible 200a 400k aas	121818
2	Alimentatore multispina Chargeur multiprise Multi plug power supply Multi-stecker-netzteil Cargador multi enchufe	169999
4	Set manico nero Set poignee noir Black handle set Schwarzer griff set Set manija negra	321433
5	Kit scheda - no pulsante led Kit fiche - sans touche led Board kit - without led button Karte kit - ohne led-taste Kit tarjeta - sin botón led	982332
5	Kit scheda Kit platine Board kit Karte kit Kit tarjeta	982482
6	Kit batteria Kit batterie Battery kit Batterien kit Kit baterias	982333
7	Kit cavo + pinza positivo Kit cable + pince positif Positive cable + clamp kit Positive kabel + klemme kit Kit cable + pinca positivo	982335
8	Kit cavo + pinza negativo Kit cable + pince negatif Negative cable + clamp kit Negative kabel + klemme kit Kit cable + pinca negativo	982336
9	Kit frontale Kit partie frontal Front panel kit Gerätefront kit Kit frontal	982485
10	Kit morsetto per fusibile Kit borne pour fuse Fuse clamp kit Sicherungsklemme kit Kit borne fusible	990595
11	Kit retro Kit partie arriere Back panel kit Rückseite kit Kit trasera	982484

REF.	ELENCO PEZZI DI RICAMBIO PIECES DETACHEES SPARE PARTS LIST ERSATZTEILLISTE PIEZAS DE REPUESTO	CODICE CODE KODE

REF.	ELENCO PEZZI DI RICAMBIO PIECES DETACHEES SPARE PARTS LIST ERSATZTEILLISTE PIEZAS DE REPUESTO	CODICE CODE KODE

Schema elettrico, Schéma électrique, Diagram, Schaltplan, Esquema de conexiones.

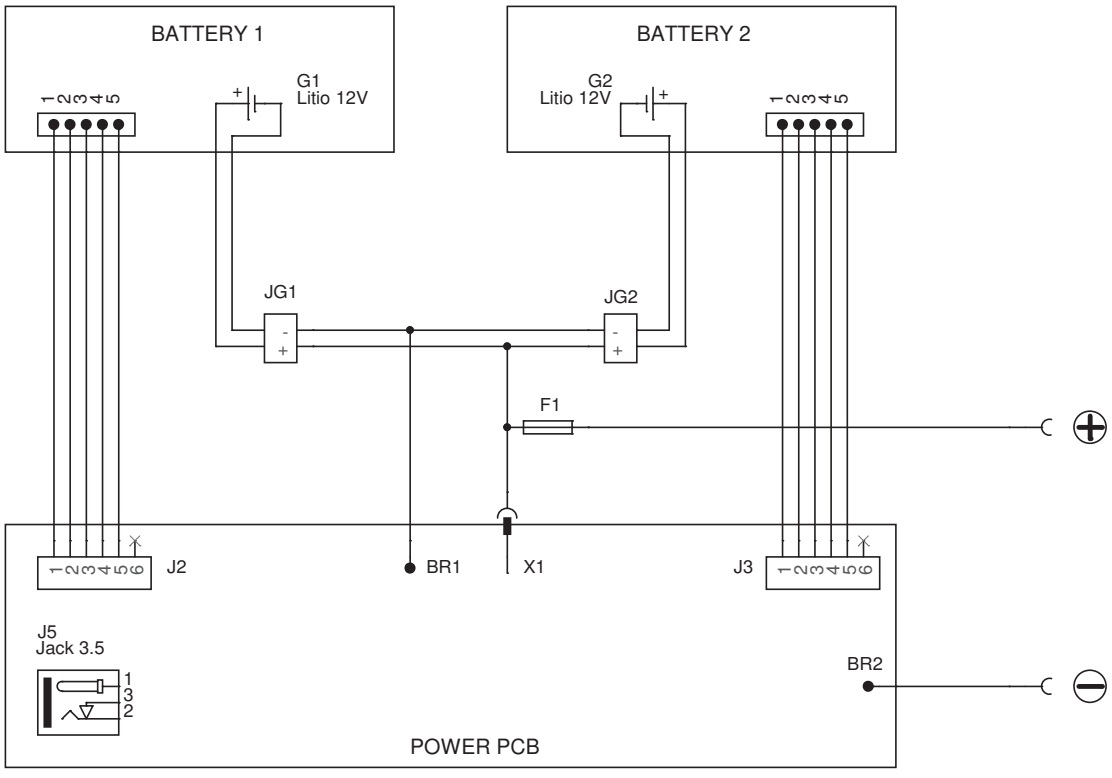

ELENCO PEZZI DI RICAMBIO
LISTE PIECES DETACHEES
SPARE PARTS LIST
ERSATZTEILLISTE
PIEZAS DE REPUESTO

STARTZILLA 9024 XT

Esploso macchina, Dessin appareil, Machine drawing, Explosions Zeichnung des Geräts, Diseño seccionado maquina.

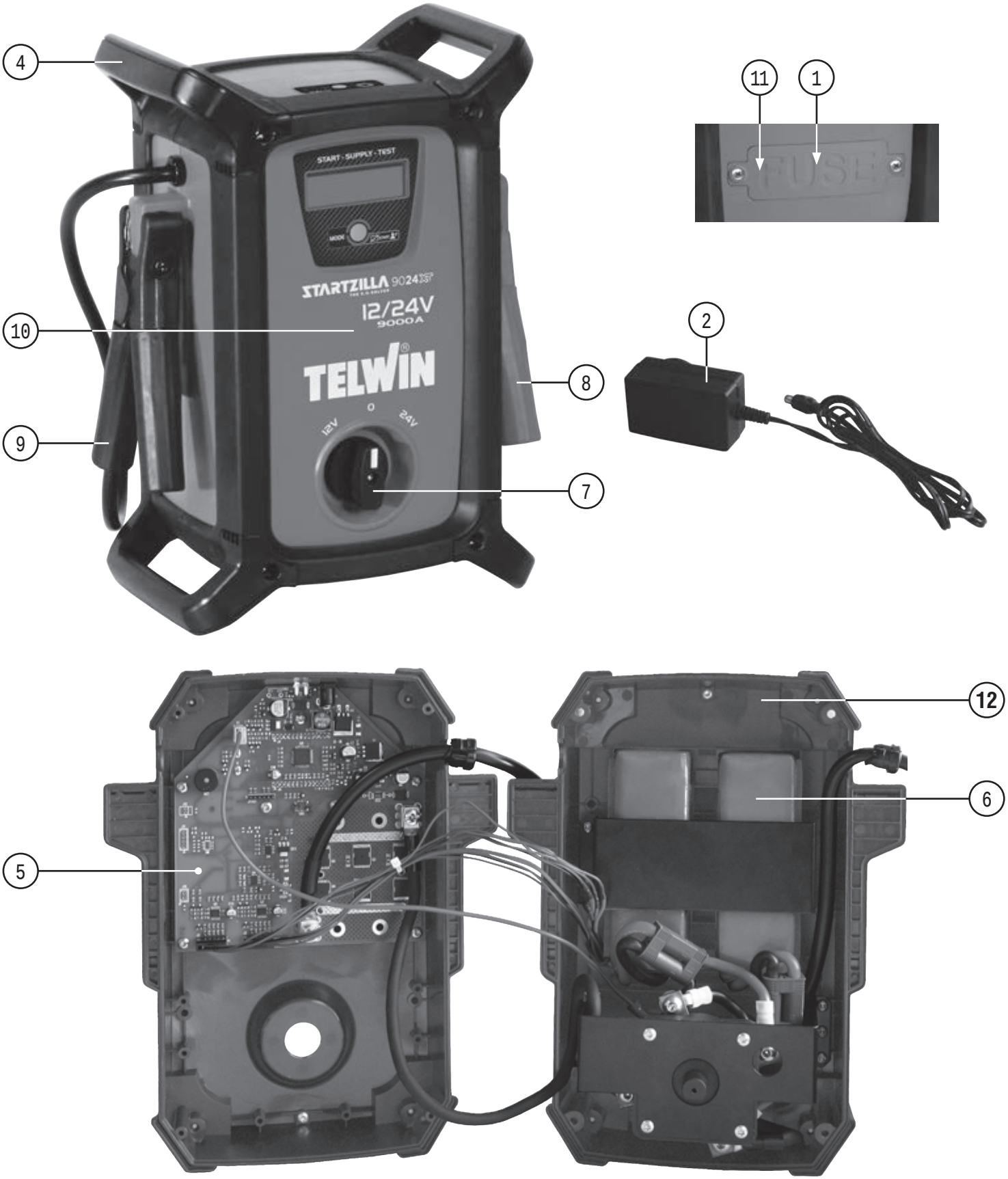

REF.	ELENCO PEZZI DI RICAMBIO PIECES DETACHEES SPARE PARTS LIST ERSATZTEILLISTE PIEZAS DE REPUESTO	CODICE CODE KODE
1	Fusibile 200a 400k aas Fusible 200a 400k aas Fuse 200a 400k aas Sicherung 200a 400k aas Fusible 200a 400k aas	121818
2	Alimentatore multispina Chargeur multiprise Multi plug power supply Multi-stecker-netzteil Cargador multi enchufe	169999
4	Set manico nero Set poignee noir Black handle set Schwarzer griff set Set manija negra	321433
5	Kit scheda - no pulsante led Kit fiche - sans touche led Board kit - without led button Karte kit - ohne led-taste Kit tarjeta - sin botón led	982331
5	Kit scheda Kit platine Board kit Karte kit Kit tarjeta	982481
6	Kit batteria Kit batterie Battery kit Batterien kit Kit baterias	982333
7	Kit commutatore + manopola Kit commutateur + poignee Switch + knob kit Schalter + knopf kit Kit conmutador + manija	982334
8	Kit cavo + pinza positivo Kit cable + pince positif Positive cable + clamp kit Positive kabel + klemme kit Kit cable + pinca positivo	982335
9	Kit cavo + pinza negativo Kit cable + pince negatif Negative cable + clamp kit Negative kabel + klemme kit Kit cable + pinca negativo	982336
10	Kit frontale Kit partie frontal Front panel kit Gerätefront kit Kit frontal	982483
11	Kit morsetto per fusibile Kit borne pour fuse Fuse clamp kit Sicherungsklemme kit Kit borne fusible	990595
12	Kit retro Kit partie arriere Back panel kit Rückseite kit Kit trasera	982484

Schema elettrico, Schéma électrique, Diagram, Schaltplan, Esquema de conexiones.

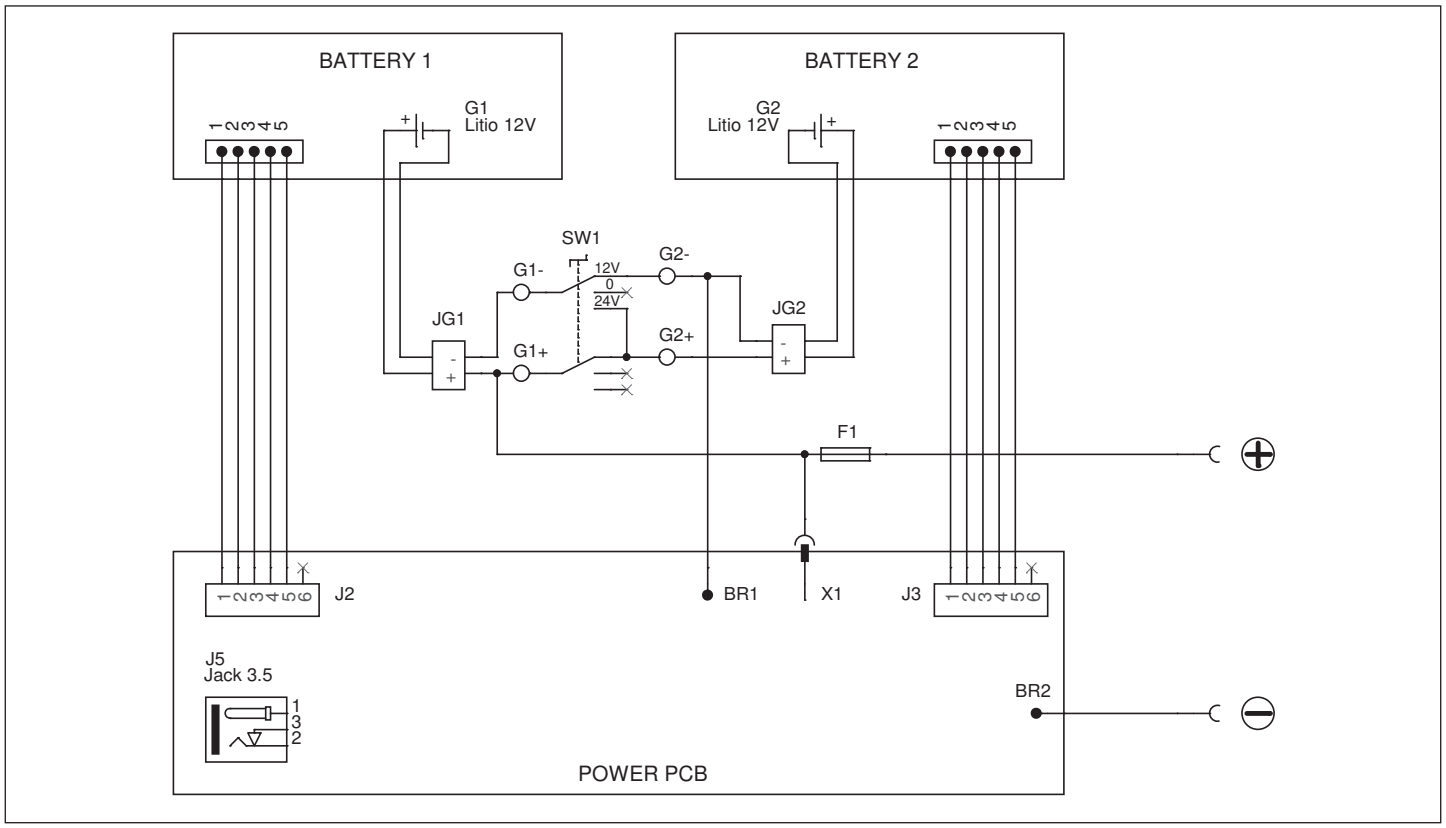

ELENCO PEZZI DI RICAMBIO
LISTE PIECES DETACHEES
SPARE PARTS LIST
ERSATZTEILLISTE
PIEZAS DE REPUESTO

PRO START 2824

Esploso macchina, Dessin appareil, Machine drawing, Explosions Zeichnung des Geräts, Diseño seccionado maquina.





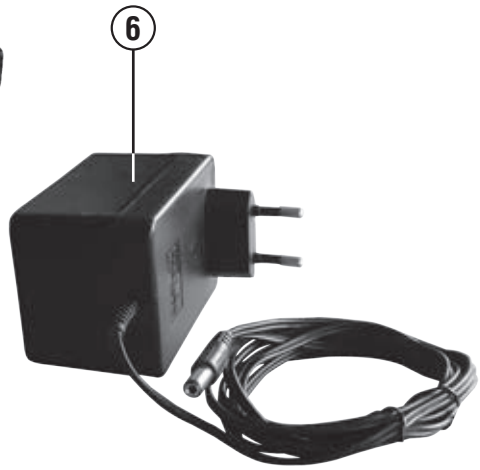

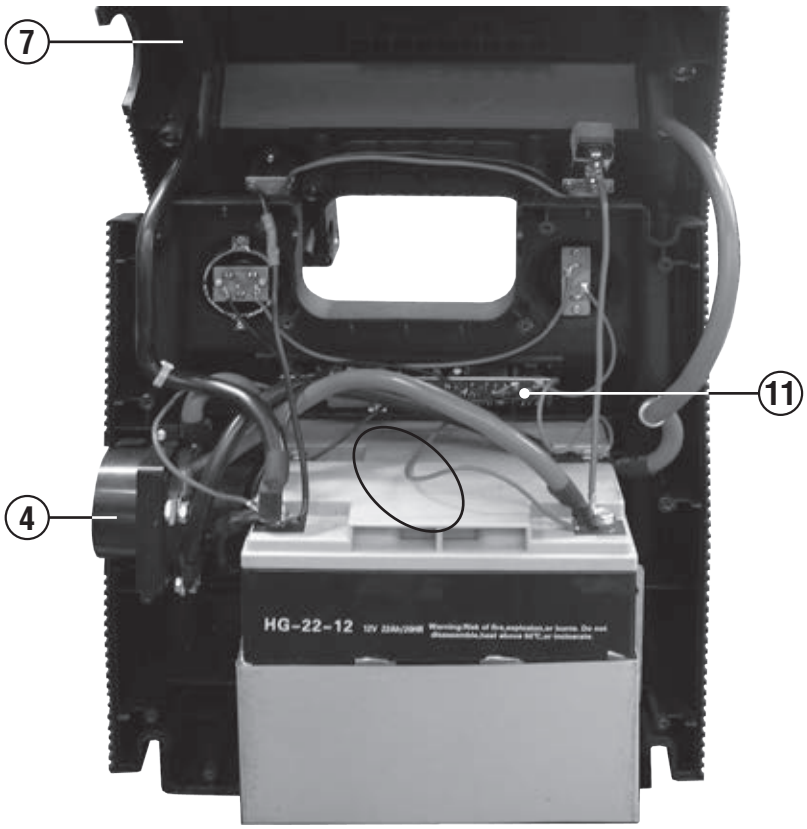

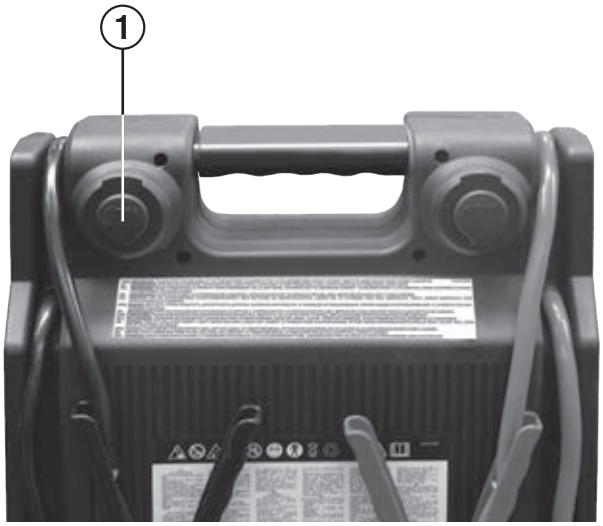

REF.	ELENCO PEZZI DI RICAMBIO PIECES DETACHEES SPARE PARTS LIST ERSATZTEILLISTE PIEZAS DE REPUESTO	PRO START 2824 CODICE CODE KODE
1	Presa jack Prise jack Jack socket Jack steckdose Tomacorriente jack	121468
2	Lampada Temoin lumineux Pilot lamp Kontrollampe Piloto	121469
3	Pulsante Poussoir Pushbutton Druckknopf Pulsador	121470
4	Commutatore Commutateur Switch Schalter Switch	121472
5	Cavo prolunga Cable extention Extension cable Verlaengerung kabel Cavo prolunga	124379
6	Alimentatore Chargeur Power supply Stromquelle Generador	169692
7	Retro Partie arriere Back panel Rueckseite Trasera	321082
8	Frontale Partie frontal Front panel Geraetefront Frontal	322967
9	Cavo 17mmq 1,00m occhiello Cable 17mmq 1,00m oeillet Cable 17mmq 1,00m eyelet Kabel 17mmq 1,00m öse Cable 17mmq 1,00m ojete	713220
10	Cavo 17mmq 1,00m occhiello Cable 17mmq 1,00m oeillet Cable 17mmq 1,00m eyelet Kabel 17mmq 1,00m öse Cable 17mmq 1,00m ojete	713221
11	Kit scheda controllo Kit fiche de controle Control pcb kit Kontrollekarte kit Kit tarjeta de controlo	981043

ELENCO PEZZI DI RICAMBIO
LISTE PIECES DETACHEES
SPARE PARTS LIST
ERSATZTEILLISTE
PIEZAS DE REPUESTO

START PLUS 4824

TELWIN®

Esploso macchina, Dessin appareil, Machine drawing, Explosions Zeichnung des Geräts, Diseño seccionado maquina.

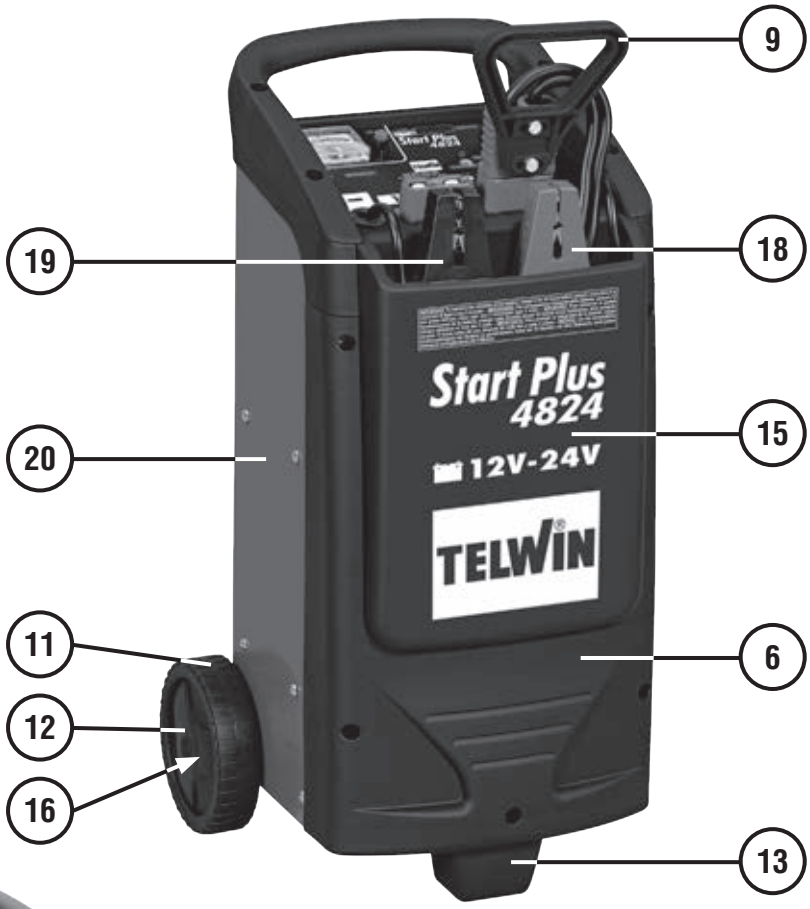

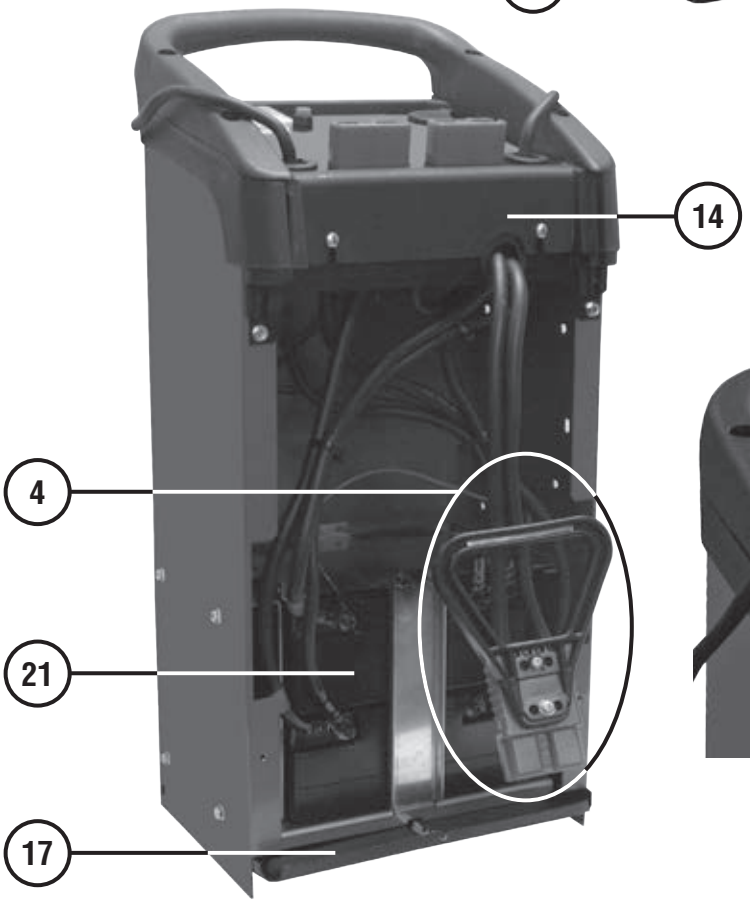

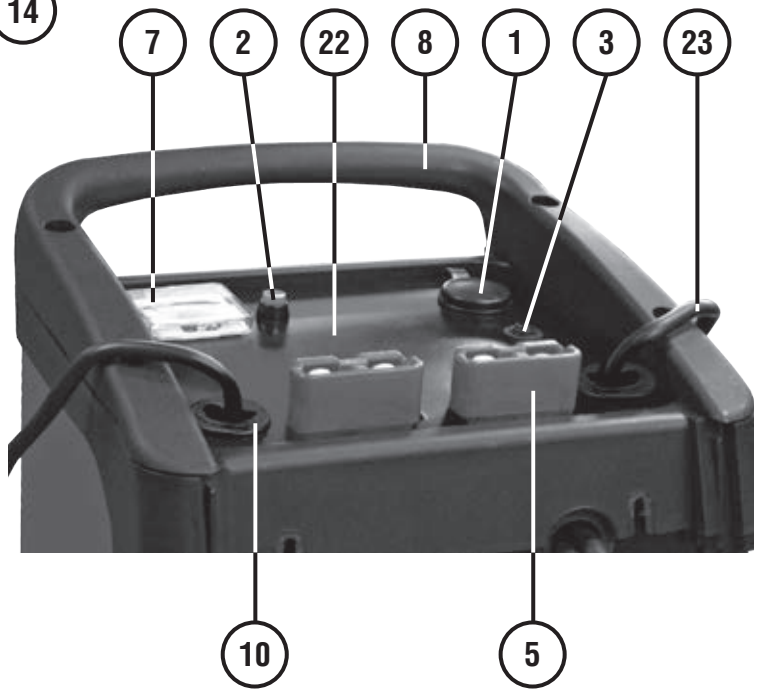

REF.	ELENCO PEZZI DI RICAMBIO PIECES DETACHEES SPARE PARTS LIST ERSATZTEILLISTE PIEZAS DE REPUESTO	CODICE CODE KODE
1	Presa Prise Socket Steckdose Enchufe	121083
2	Pulsante Poussoir Pushbutton Druckknopf Pulsador	121095
3	Protezione ripristinabile Protection reconstituable Restorable protection Wiederherstellbarer schutz Protección rehabilitable	121223
4	Assieme presa volante Set prise Socket set Steckdose set Set enchufe	124315
5	Assieme prese Kit du prises Sockets kit Steckdosen kit Kit tomacorriente	124826
6	Frontale Partie frontal Front panel Geraetefront Frontal	322801
7	Voltmetro Voltmetre Voltmeter Voltmeter Voltimetro	152235
8	Manico Poignee Handle Handgriff Manija	312408
9	Assieme maniglia Set poignee Handle set Griff set Set manija	312429
10	Pressacavo Presse cable Cable bushing Kabelhalter Prensa cable	322112
11	Ruota Roue Wheel Rad Rueda	322193
12	Tappo blocca ruota Bouchon ferme roue Wheel locking ring Radsperrestopfen Tapon de bloqueo rueda	322223

REF.	ELENCO PEZZI DI RICAMBIO PIECES DETACHEES SPARE PARTS LIST ERSATZTEILLISTE PIEZAS DE REPUESTO	CODICE CODE KODE
13	Piedino Embout Foot Fuss Pie	322803
14	Cornice Cadre Frame Rahmen Marco	322804
15	Tasca Poche Pocket Tasche Bolsillo	362053
16	Asse per ruote Axes pour roue Wheels axle Raederachse Eje por rueda	422961
17	Fondalino Chassis Bottom Boden Fondo	644177
18	Pinza positivo (+) Pince positiv (+) Positive clamp (+) Positive zange (+) Pinza positivo (+)	712025
19	Pinza di massa Pince de masse Work clamp Masseklemme Pinza de masa	712026
20	Kit retro Kit partie arriere Back panel kit Rueckseite kit Kit trasera	981656
21	Kit batteria Kit batterie Battery kit Batterie kit Kit bateria	981551
22	Kit cruscotto Kit tableau Dashboard kit Schaltbrett kit Kit cuadro	981657
23	Kit cavo Kit cable Cable kit Kabel kit Kit cable	981659

REF.	ELENCO PEZZI DI RICAMBIO PIECES DETACHEES SPARE PARTS LIST ERSATZTEILLISTE PIEZAS DE REPUESTO	CODICE CODE KODE

Schema elettrico, Schéma électrique, Diagram, Schaltplan, Esquema de conexiones.

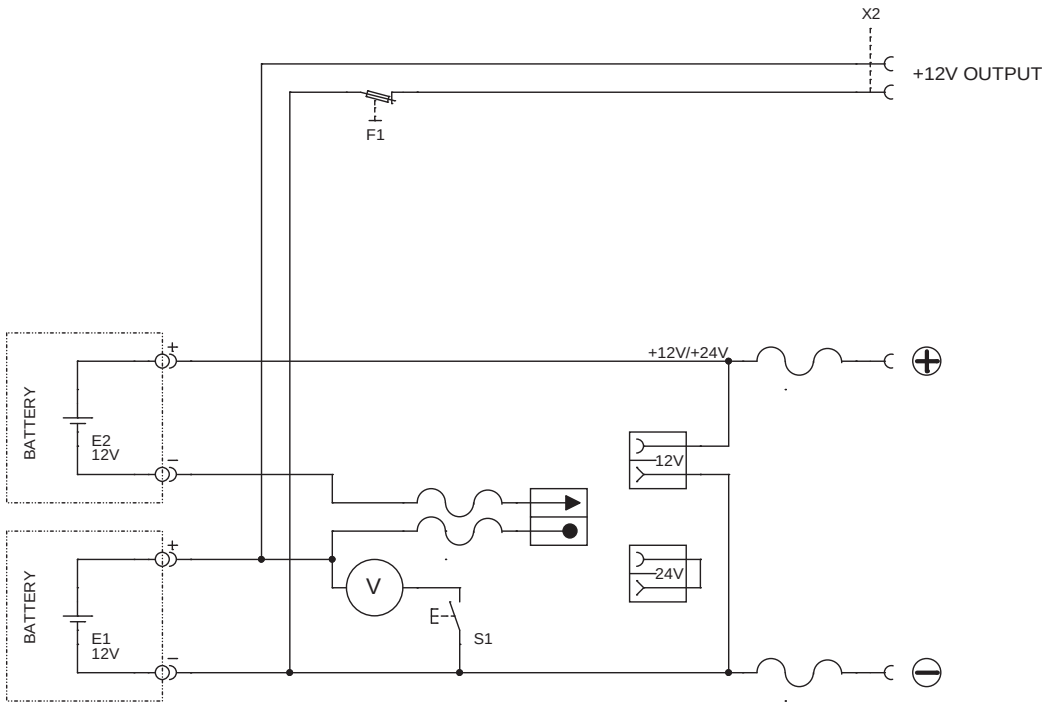

ELENCO PEZZI DI RICAMBIO
LISTE PIECES DETACHEES
SPARE PARTS LIST
ERSATZTEILLISTE
PIEZAS DE REPUESTO

START PLUS 6824

TELWIN

Esploso macchina, Dessin appareil, Machine drawing, Explosions Zeichnung des Geräts, Diseño seccionado maquina.

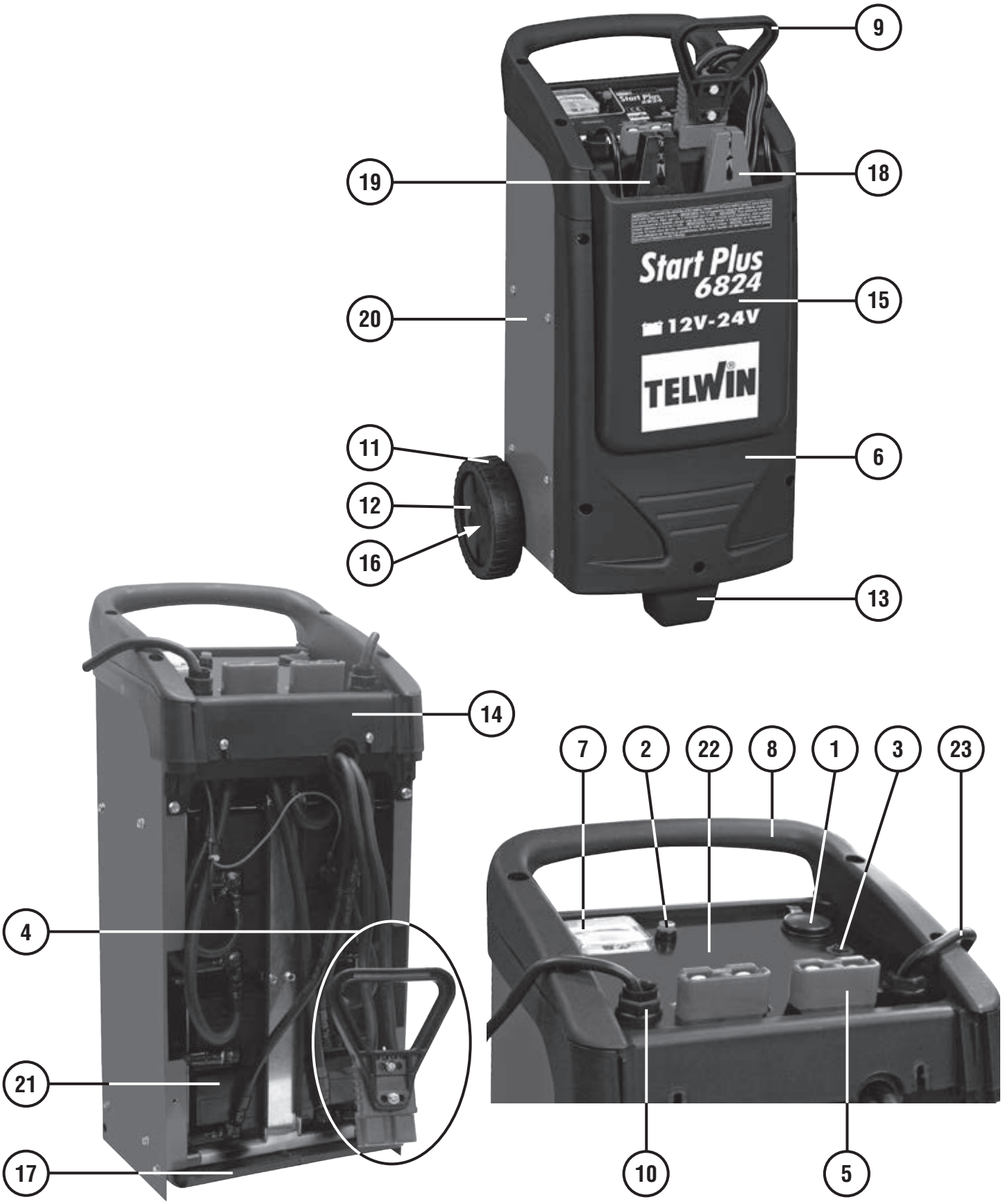

REF.	ELENCO PEZZI DI RICAMBIO PIECES DETACHEES SPARE PARTS LIST ERSATZTEILLISTE PIEZAS DE REPUESTO	CODICE CODE KODE
1	Presa Prise Socket Steckdose Enchufe	121083
2	Pulsante Poussoir Pushbutton Druckknopf Pulsador	121095
3	Protezione ripristinabile Protection reconstituable Restorable protection Wiederherstellbarer schutz Protección rehabilitable	121223
4	Assieme presa volante Set prise Socket set Steckdose set Set enchufe	124315
5	Assieme prese Kit du prises Sockets kit Steckdosen kit Kit tomacorriente	124357
6	Frontale Partie frontal Front panel Gerätefront Frontal	322911
7	Voltmetro Voltmetre Voltmeter Voltmeter Voltimetro	152235
8	Manico Poignee Handle Handgriff Manija	312408
9	Assieme maniglia Set poignee Handle set Griff set Set manija	312429
10	Kit pressacavo + ghiera Kit presse cable + embout Kit cable bushing + ring nut Kit kabelhalter + nutmutter Kit prensa cable + virola	990046
11	Ruota Roue Wheel Rad Rueda	322193
12	Tappo blocca ruota Bouchon ferme roue Wheel locking ring Radsperrestopfen Tapon de bloqueo rueda	322223
13	Piedino Embout Foot Fuss Pie	322803
14	Cornice Cadre Frame Rahmen Marco	322804
15	Tasca Poche Pocket Tasche Bolsillo	362054
16	Asse per ruote Axes pour roue Wheels axle Raederachse Eje por rueda	422961
17	Fondalino Chassis Bottom Boden Fondo	644177
18	Pinza positivo (+) Pince positiv (+) Positive clamp (+) Positive zange (+) Pinza positivo (+)	712025
19	Pinza di massa Pince de masse Work clamp Masseklemme Pinza de masa	712026
20	Kit retro Kit partie arriere Back panel kit Rueckseite kit Kit trasera	981656
21	Kit batteria Kit batterie Battery kit Batterie kit Kit bateria	981551
22	Kit cruscotto Kit tableau Dashboard kit Schaltbrett kit Kit cuadro	981658
23	Kit cavo Kit cable Cable kit Kabel kit Kit cable	981660

Schema elettrico, Schéma électrique, Diagram, Schaltplan, Esquema de conexiones.

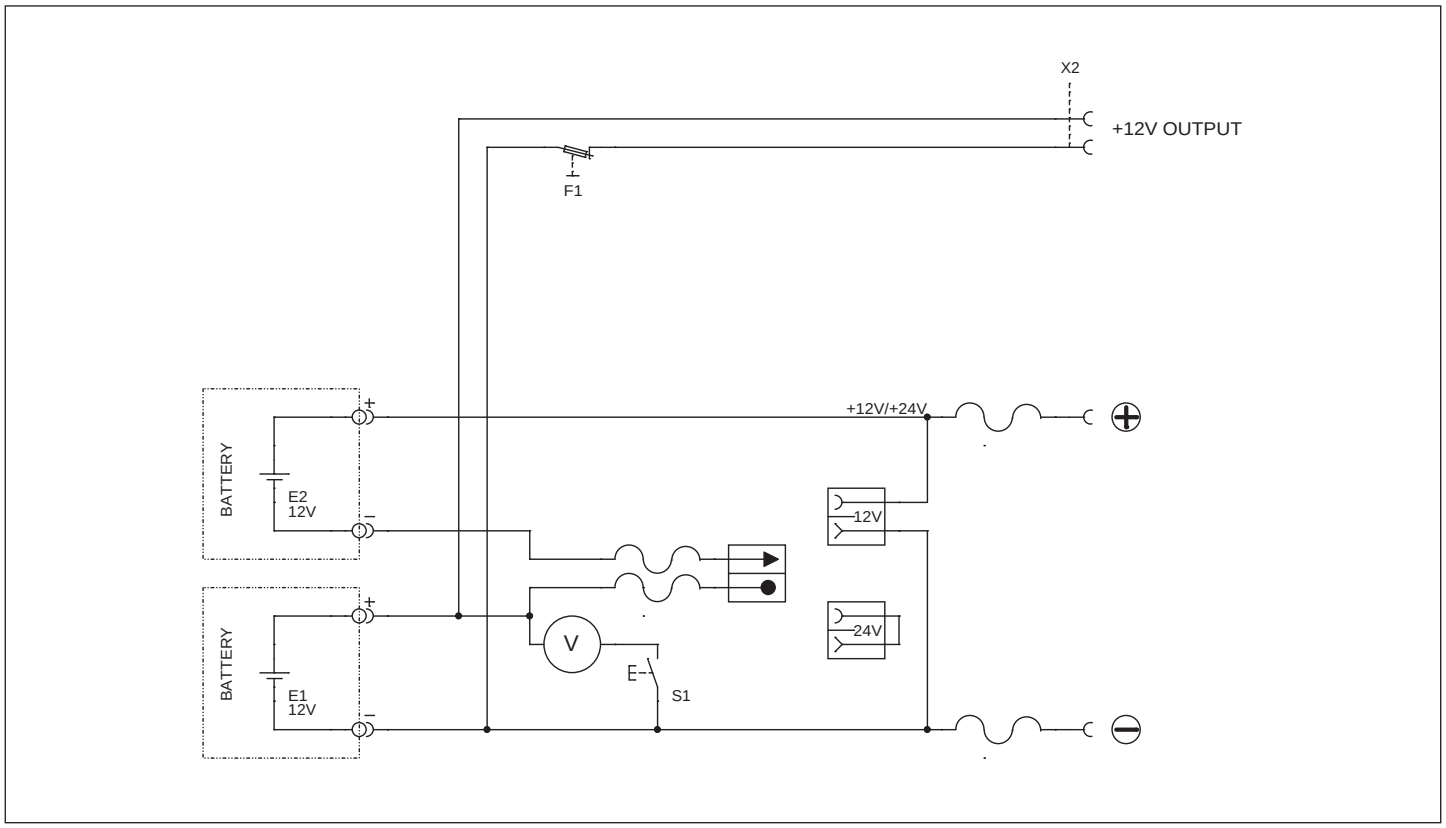

ELENCO PEZZI DI RICAMBIO
LISTE PIECES DETACHEES
SPARE PARTS LIST
ERSATZTEILLISTE
PIEZAS DE REPUESTO

AIR PRO GRANDVIEW PAPR HELMET

TELWIN®

Esploso macchina, Dessin appareil, Machine drawing, Explosions Zeichnung des Geräts, Diseño seccionado maquina.



REF.	ELENCO PEZZI DI RICAMBIO PIECES DETACHEES SPARE PARTS LIST ERSATZTEILLISTE PIEZAS DE REPUESTO	CODICE CODE KODE
1	Power supply Source de alimentation Power supply Stromversorgung Fuente de alimentación	168002
2	Prefiltro maschera Masque pré-filtre Mask pre-filter Maske-vorfilter Prefiltro máscara	712459
3	Cintura - maschera grandview Ceinture - masque grandview Belt - grandview mask Gürtel - grandview helm Cinta - mascara grandview	712460
4	Tubo aria - maschera grandview Tuyau d'air - masque grandview Air hose - grandview mask Luftschlauch - grandview helm Manguera de aire - máscara grandview	712461
5	Copertura tubo aria - maschera grandview Couverture tuyau d'air masque grandview Air hose cover - grandview mask Luftschlauchabdeckung - grandview helm Tapa manguera de aire-máscara grandview	712462
6	Fascia regolazione - maschera grandview Bande de réglage - masque grandview Adjustment band - grandview mask Einstellband - grandview helm Banda de ajuste - máscara grandview	712463
7	Filtro papr Filtre papr Papr filter Papr filter Filtro papr	712773
8	Protezione vetro interno 70x106mm 2pz Protection verre interne 70x106mm 2pcs Internal glass protection 70x106mm 2pcs Internes glasschutz 70x106mm 2stk Proteccion vidrio interno 70x106mm 2pz	804237
9	Protezione vetro esterno 122.5x280mm 2pz Protection verre externe 122.5x280mm 2pc External glass protection 122.5x280m 2pc Externes schutzglas 122.5x280mm 2stk Proteccion vidrio externo 122.5x280m 2pz	804238
10	Batteria per maschera air pro grandview Batterie pour masque air pro grandview Battery for air pro grandview helmet Batterie für air pro grandview maske Bateria para mascara air pro grandview	993018

ELENCO PEZZI DI RICAMBIO
LISTE PIECES DETACHEES
SPARE PARTS LIST
ERSATZTEILLISTE
PIEZAS DE REPUESTO

AIRLITE PAPR HELMET

TELWIN®

Esploso macchina, Dessin appareil, Machine drawing, Explosions Zeichnung des Geräts, Diseño seccionado maquina.

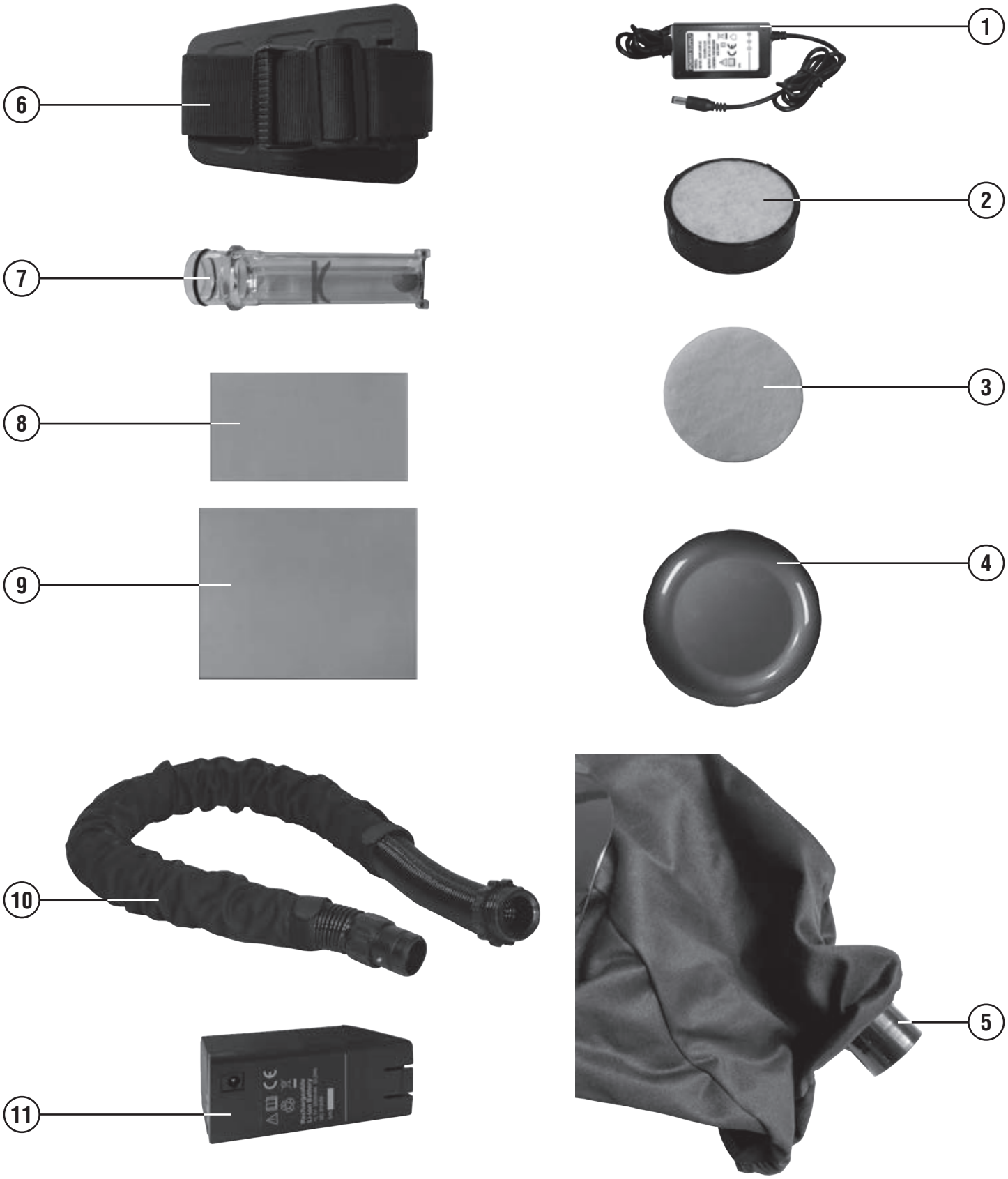

REF.	ELENCO PEZZI DI RICAMBIO PIECES DETACHEES SPARE PARTS LIST ERSATZTEILLISTE PIEZAS DE REPUESTO	CODICE CODE KODE
1	Alimentatore Alimentation Power supply Stromquelle Alimentacion	169995
2	Filtro papr Filtre papr Papr filter Papr filter Filtro papr	712450
3	Prefiltro Prefiltre Pre-filter Pre-filter Prefiltro	712451
4	Coperchio respiratore mask airlite Couvrecle respirateur mask airlite Respirator cover mask airlite Atmenabdeckung mask airlite Tapadera respirador mask airlite	712452
5	Manicotto respiratore mask airlite Manchon respirateur mask airlite Respirator sleeve mask airlite Atmenhülse mask airlite Manguito respirador mask airlite	712456
6	Cintura Ceinture Belt Gürtel Cinta	712457
7	Flussometro Fluxmètre Flowmeter Durchflussmesser Flujòmetro	712458
8	Protezione vetro interno 58x107mm 2pz Protection verre interne 58x107mm 2pcs Internal glass protection 58x107mm 2pcs Internes glasschutz 58x107mm 2stk Proteccion vidrio interno 58x107mm 2pz	804215
9	Protezione vetro esterno 98x123mm 2pz Protection verre externe 98x123mm 2pcs External glass protection 98x123mm 2pcs Externes schutzglas 98x123mm 2stk Proteccion vidrio externo 98x123mm 2pz	804216
10	Kit tubo + terminale respiratore mascher Kit tuyau + born respirateur masque Hose + terminal kit - mask respirator Schlauch + klemmensatz respirator/maske Kit tubo + terminales respirador mascara	982492
11	Batteria per maschera airlite Batterie pour masque airlite Battery for airlite helmet Batterie für airlite maske Bateria para mascara airlite	993017

JOIN THE INNOVATION

www.telwin.com
www.facebook.com/TelwinSpa
www.instagram.com/telwinspa
www.youtube.com/user/telwinspa
www.linkedin.com/company/telwinspa

Copyright by Telwin © 2022 - Tutti i diritti riservati. All rights reserved.

cod. 989611

TELWIN®
JOIN THE INNOVATION

TELWIN spa
Via della Tecnica, 3 - 36030 Villaverla (VI) Italy - Tel. +39 0445 858811